Calorifiers
Enamelled

Calorifiers
Stainless steel

Heat exchanger:

standard

large

specially large

Fresh water modules

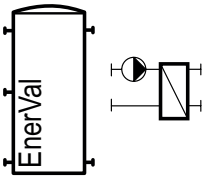

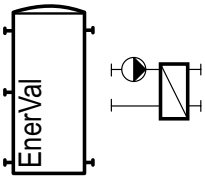

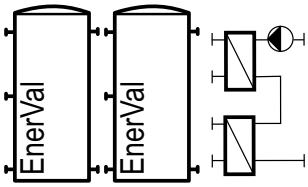

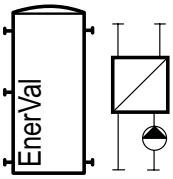

Energy buffer storage tanks

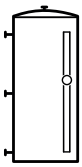

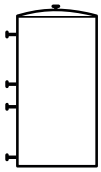

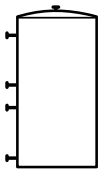

Stratified storage tank
Stratified combination storage tank

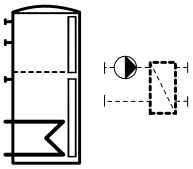

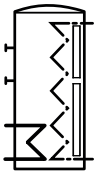

Electric heating elements

Engineering

Hoval calorifier CombiVal ER (200-500)

- Calorifier made of steel enamelled inside
- Smooth pipe heat exchanger enamelled, built in
- Magnesium protection anode built in
- Flange for electric heating element
- Thermal insulation made of polyurethane hard foam foamed on the calorifier
- Dismountable foil casing, red coloured, ERW (200) white coloured
- Including thermometer
- Sensor channel

On request
- Flange-mounted electric heating element

Delivery
- Calorifier with foil casing installed

Hoval calorifier CombiVal ER (800,1000)

- Calorifier made of steel, enamelled inside
- Smooth pipe heat exchanger enamelled, built in
- 2 magnesium protection anodes built in
- Flange below as cleaning flange or for the installation as flange-mounted electric heating element or blank flange with immersion sleeve
- Flange above as additional cleaning flange
- Flange for electric heating element or immersion sleeve
- Thermal insulation made of polyester fleece with foil jacket, red coloured
- With thermometer
- Two terminal bars for contact sensor

On request
- Flange-mounted electric heating element
- Flange including immersion sleeve

Delivery
- Calorifier and thermal insulation completely installed (can be removed for installation)

Range

CombiVal type		
ER	(200)	B
ERW	(200)	B
ER	(300)	B
ER	(400)	B
ER	(500)	B
ER	(800)	
ER	(1000)	

Calorifier

CombiVal ER (200-1000)

Calorifier made of steel enamelled inside.
Smooth pipe heat exchanger enamelled, built in

CombiVal ER type		Volume dm³	Heating surface m²	Part No.
(200)	B	196	0.95	7015 960
(200) ERW (white)	B	196	0.95	7015 961
(300)	B	302	1.45	7015 962
(400)	B	382	1.80	7015 963
(500)	B	473	1.90	7015 964
(800)		735	3.70	7014 422
(1000)		968	4.50	7014 423

Electric heating elements
see chapter “Electric heating elements”

Accessories

Flange cover 180 - ¾″ — 2077 035
for the installation of the Correx®
impressed current anode in flange
Ø 180/110 mm,
enamelled on the inside with Rp ¾″
sleeve
Seal included

Flange with immersion sleeve for temperature sensor made of steel on DHW side, enamelled inside. — 6028 468
Flange dimensions:
- Outer Ø 180 mm,
- Pitch circle Ø 150 mm, 8 x M10
Immersion sleeve dimensions:
- Installation length = 120 mm,
- Outer Ø: 24 mm, inner Ø: 20 mm

Kit Correx® impressed current anode UP2.3-919-L395/1 — 684 760
for long-term corrosion protection for
installation in the enamelled calorifier
with reduction R 1¼″ (ET) – Rp 1″ (IT)
and R 1″ (ET) – Rp ¾″ (IT)
Installation length: 395 mm
Connection cable length: 1 x 2000 mm
1 Correx® impressed current anode

In every case, **either** a Correx® impressed current anode **or** one/two magnesium anodes are allowed to be used.

		Part No.
	**Immersion sensor TF/2P/5/6T, L = 5.0 m with plug** for TopTronic® E controller modules/ module expansions with exception of basic module district heating/fresh water or basic module district heating com cable length: 5 m with plug sensor sleeve diameter: 6 x 50 mm dewpoint-proof operating temperature: -20…105 °C protection class: IP67	2056 788
	**Immersion sensor TF/2P/5/6T, L = 5.0 m** for TopTronic® E controller modules/ module expansions with exception of basic module district heating/fresh water or basic module district heating com, cable length: 5 m without plug sensor sleeve diameter: 6 x 50 mm, dewpoint-proof, operating temperature: -20…105 °C, protection class: IP67	2055 888
 **At TopTronic® E, immersion sensor is included in the boiler controller or in the heating controller set.**	**Immersion sensor TF/12N/2.5/6T, L = 2.5 m** for gas boiler with RS-OT Cable length: 2.5 m Sensor sleeve diameter: 6 x 50 mm, dewpoint-proof, operating temperature: -20…105 °C, protection class: IP67	2056 791
 **Thermal water mixer** see “Various system components”	**Calorifier thermostat control TW 12** Universal thermostat controller for thermostatic pump charge demand, setting in casing, visible from outside. 15-95 °C, switching difference 6 K, capillar length 700 mm incl. fastening material for Hoval calorifier, can be used with integrated immersion sleeve	6010 080

Services

Commissioning
Commissioning by works service or Hoval trained authorised serviceman/company is condition for warranty.

For commissioning and other services please contact your Hoval sales office.

CombiVal ER (200-500)

Type		(200)	(300)	(400)	(500)
• Volume	dm^3	196	302	382	473
• Operating pressure/test pressure	bar	10/13	10/13	10/13	10/13
• Max. operating temperature	°C	95	95	95	95
• Thermal insulation PU-foam foamed onto calorifier	mm	75	50	75	75
• Thermal insulation λ	W/mK	0.027	0.027	0.027	0.027
• Fire protection class		B2	B2	B2	B2
• Heat loss at 65 °C	W	49	67	65	76
• Transport weight	kg	77	104	134	146
• U value	W/m^2K	0.328	0.404	0.307	0.308
Heating battery (built in)					
• Heating surface	m^2	0.95	1.45	1.80	1.90
• Heating water	dm^3	6.4	9.9	12.2	12.8
• Flow resistance [1)]	z value	7	10	12	13
• Operating pressure/test pressure	bar	10/13	10/13	10/13	10/13
• Max. operating temperature	°C	110	110	110	110
• Dimensions		see table of dimensions			

[1)] Flow resistance heating battery in mbar = flow rate $(m^3/h)^2$ x z (1 mbar = 0.1 kPa)

CombiVal ER (800,1000)

Type		(800)	(1000)
• Volume	dm^3	735	968
• Operating pressure/test pressure	bar	10/13	10/13
• Max. operating temperature	°C	95	95
• Thermal insulation made of polyester fleece	mm	100	100
• Thermal insulation λ	W/mK	0.040	0.040
• Fire protection class		B2	B2
• Heat loss at 65 °C	W	127	142
• Transport weight	kg	251	324
• U value	W/m^2K	0.376	0.370
Heating battery (built in)			
• Heating surface	m^2	3.70	4.50
• Heating water	dm^3	34.2	40.6
• Flow resistance [1)]	z value	6	8
• Operating pressure/test pressure	bar	10/13	10/13
• Max. operating temperature	°C	110	110
• Dimensions		see table of dimensions	

[1)] Flow resistance heating battery in mbar = flow rate $(m^3/h)^2$ x z (1 mbar = 0.1 kPa)

Performance figure

Selection of the calorifier type
at a hot water temperature of 45 °C

Reading example
see engineering

	Comfort [1]			Standard [2]		
T >	60 °C	70 °C	80 °C	60 °C	70 °C	80 °C
NL v						
1	200			200		
2	300	200		300	200	
3			200			200
4	400			400		
5	500	300		500	300	
6			300			300
7						
8						
9	800	400				
10	1000	500		800	400	
11			400	1000	500	
12			500			
13						400
14						500
15						
16						
17						
18						
19						
20						
21						
22		800				
23						
24						
25						
26		1000				
27						
28					800	
29						
30			800			
31						
32						
33					1000	
34						
35			1000			
36						
37						
38						800
39						
40						
41						
42						
43						
44						
45						1000
46						
47						
48						
49						
50						

	Comfort [1]			Standard [2]		
T >	60 °C	70 °C	80 °C	60 °C	70 °C	80 °C
NL v						
51						
52						
53						
54						
55						
56						
57						
58						
59						
60						
61						
62						
63						
64						
65						
66						
67						
68						
69						
70						
71						
72						
73						
74						
75						
76						
77						
78						
79						
80						
81						
82						
83						
84						
85						
86						
87						
88						
89						
90						
91						
92						
93						
94						
95						
96						
97						
98						
99						
100						

T = Heating flow
NL = Performance figure
Performance figure NL acc. to DIN 4708 = number of flats which can be supplied with domestic hot water when the calorifier is heated and permanently reheated with the heat generator (standard flat: 1 bathroom - 4 rooms - 3.5 persons)
[1] Calculation with simultaneity factor according to DIN 4708 (preferred for Switzerland)
[2] Calculation with simultaneity factor according to Dresden Technical University

10 min peak output/N number with domestic hot water 45 °C
according to DIN 4708 (Comfort) and Dresden Technical University (Standard)

Reading example
see Engineering

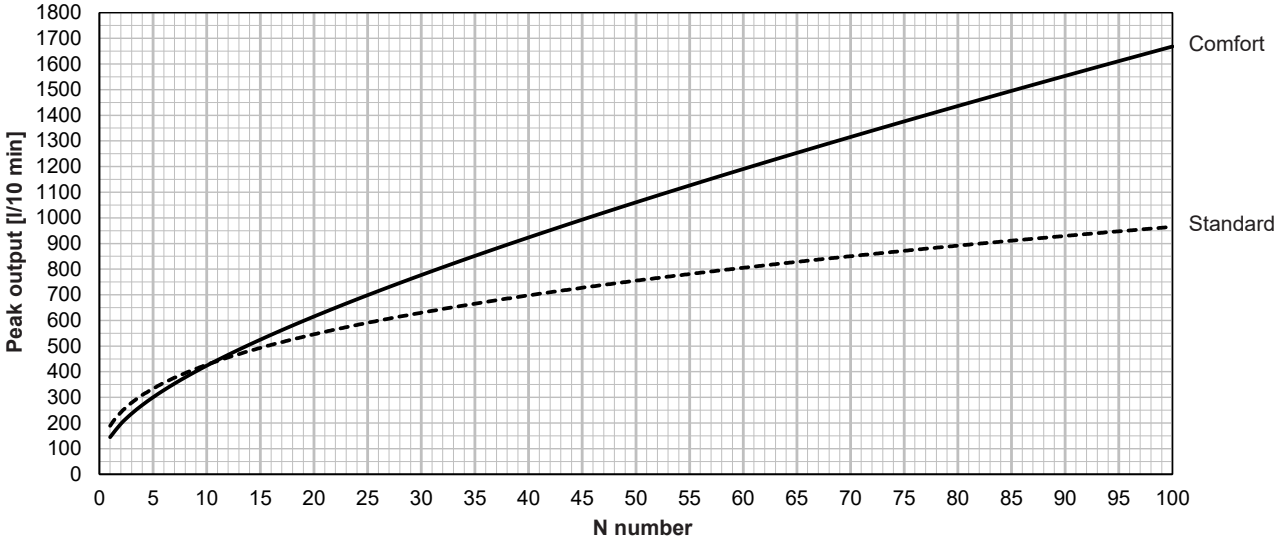

CombiVal ER (200)

Hot water output
Continuous output

Reading example
see engineering

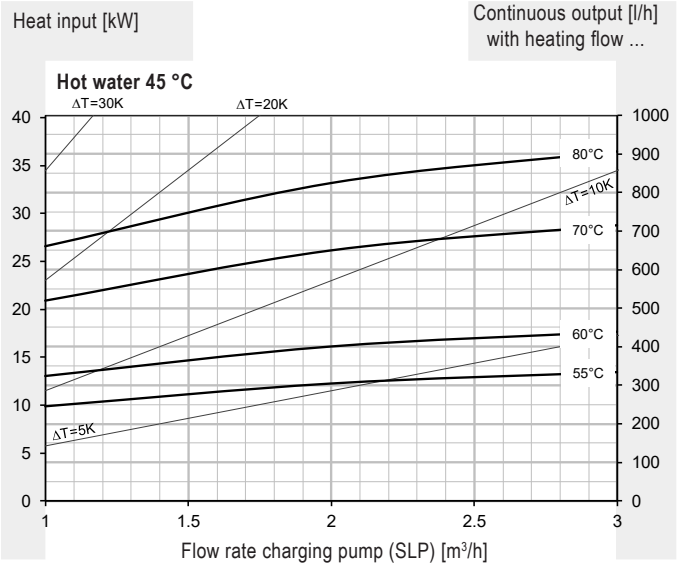

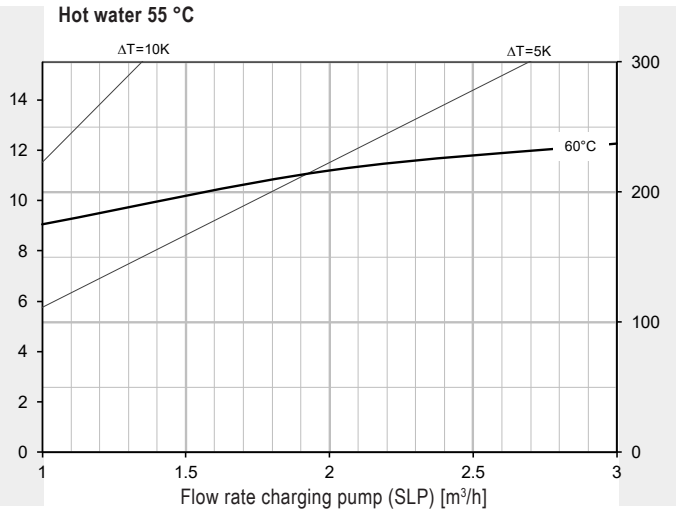

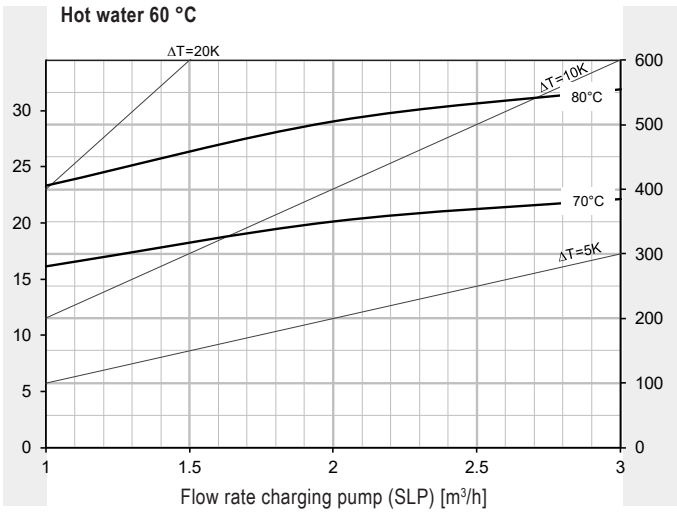

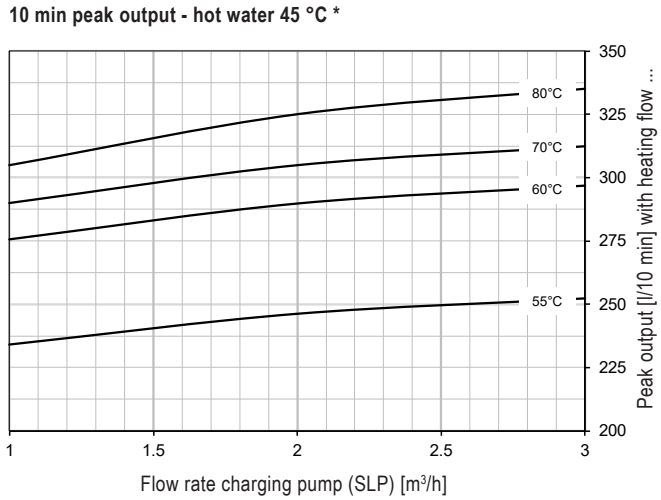

Pressure drop heating coil - delivery head charging pump

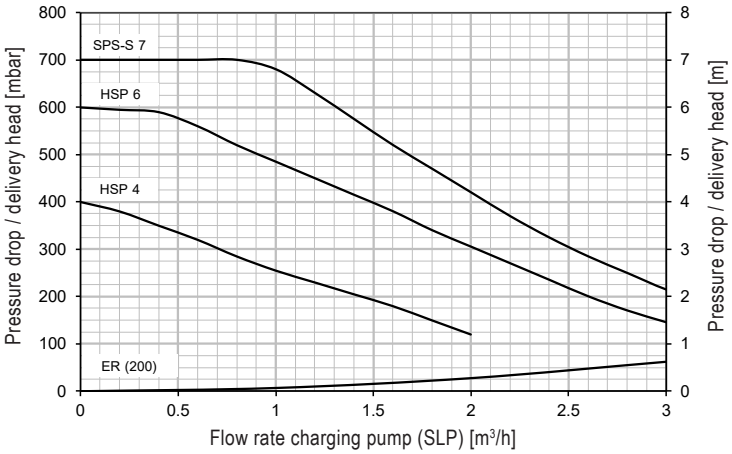

* Calorifier heated to 60 °C

CombiVal ER (300)

Hot water output
Continuous output

Reading example
see engineering

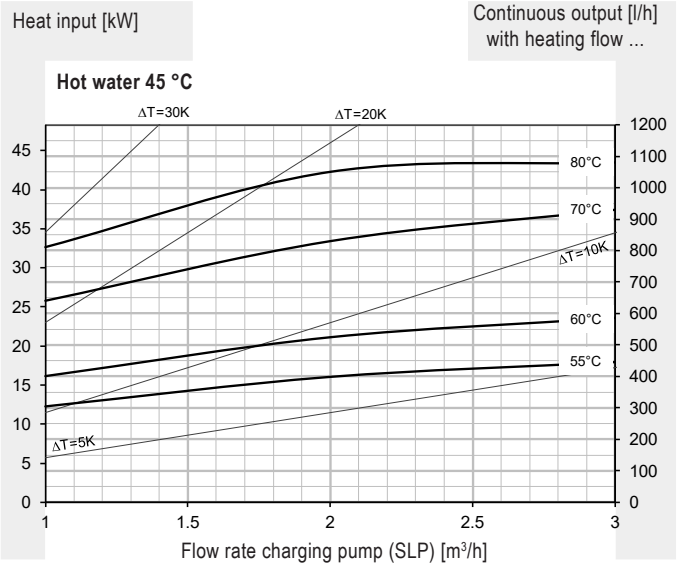

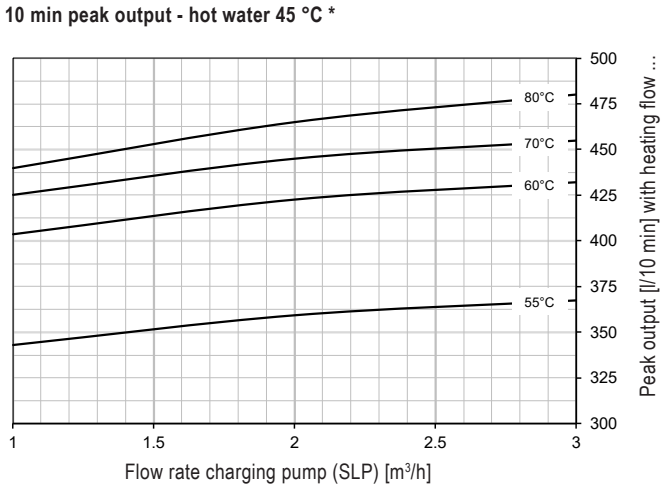

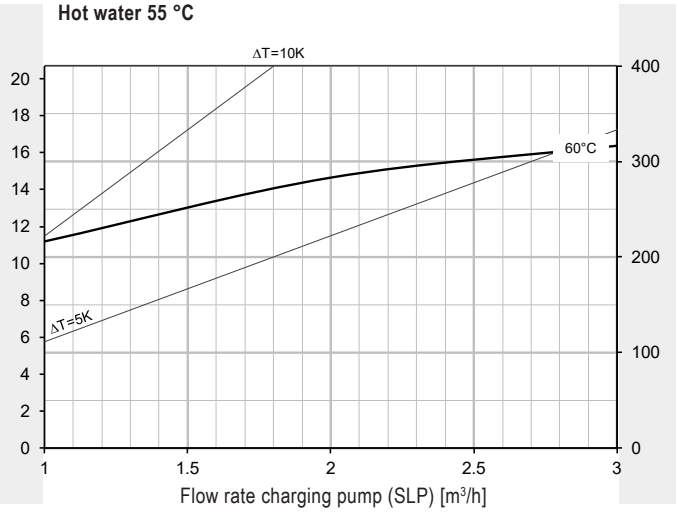

Pressure drop heating coil - delivery head charging pump

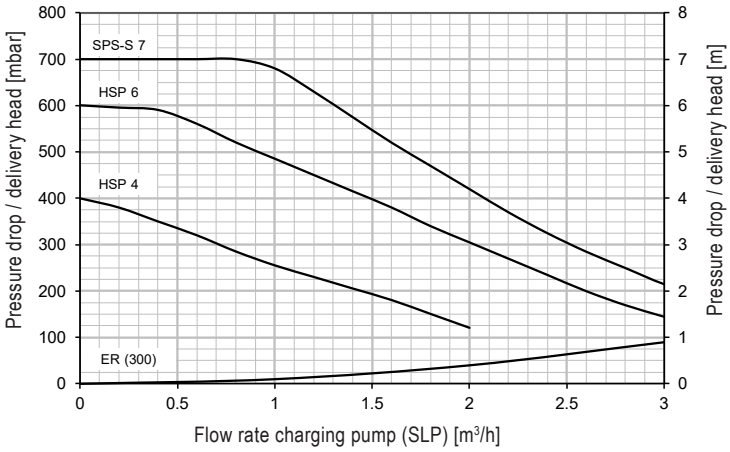

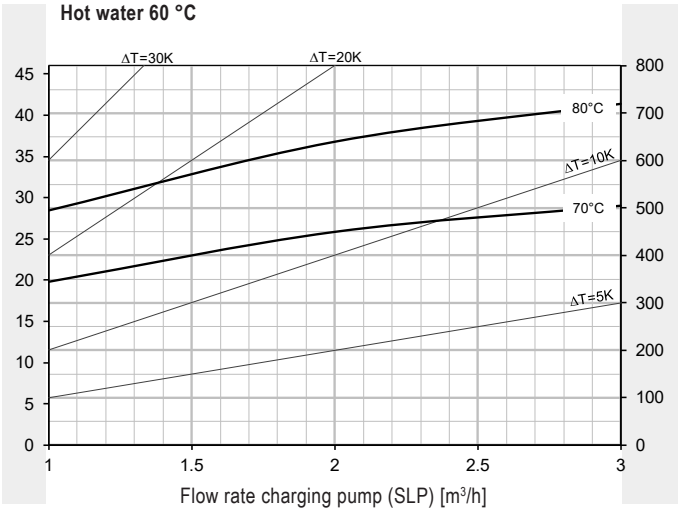

* Calorifier heated to 60 °C

CombiVal ER (400)

Hot water output
Continuous output

Reading example
see engineering

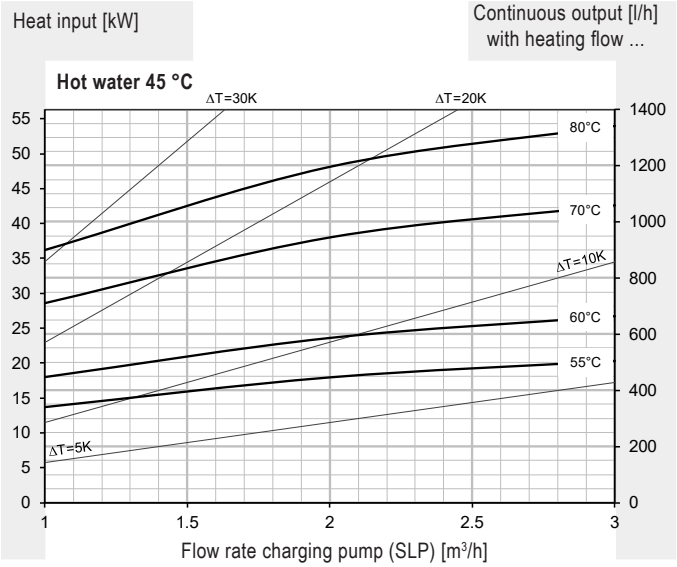

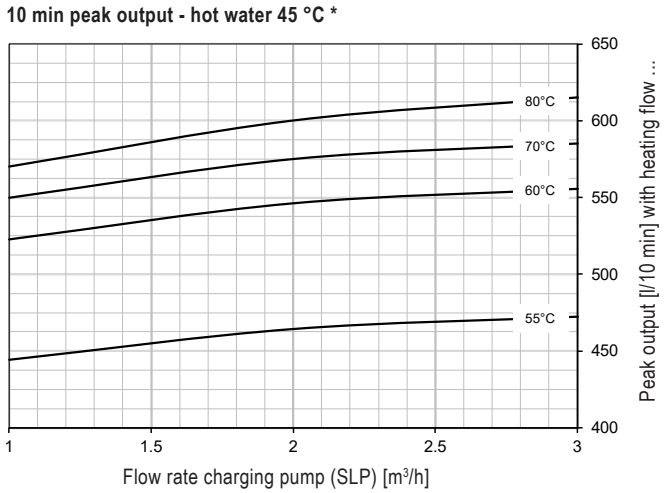

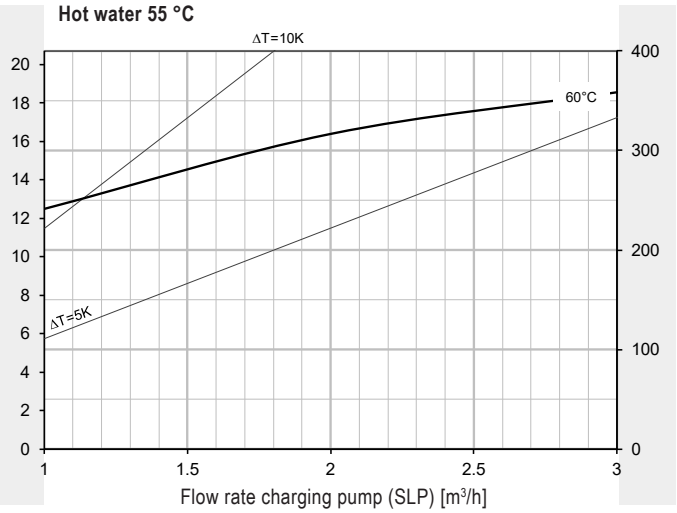

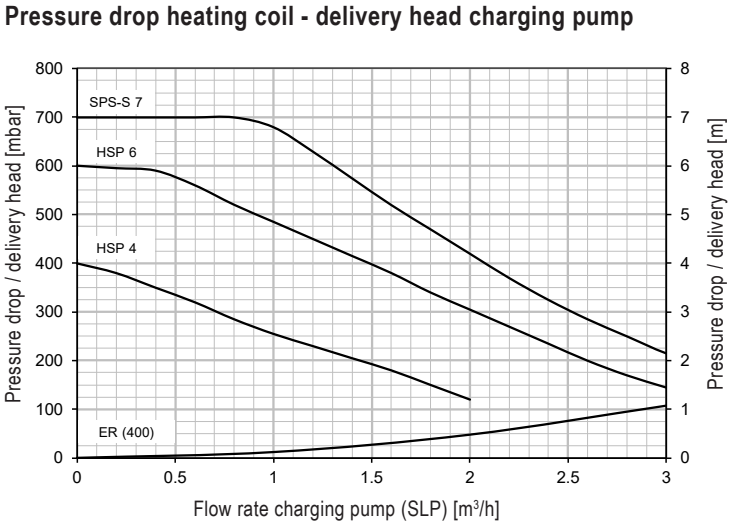

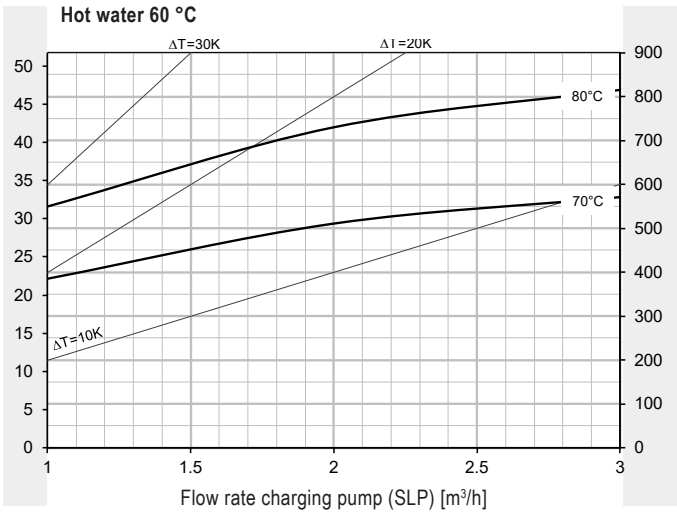

* Calorifier heated to 60 °C

CombiVal ER (500)

Hot water output
Continuous output

Reading example
see engineering

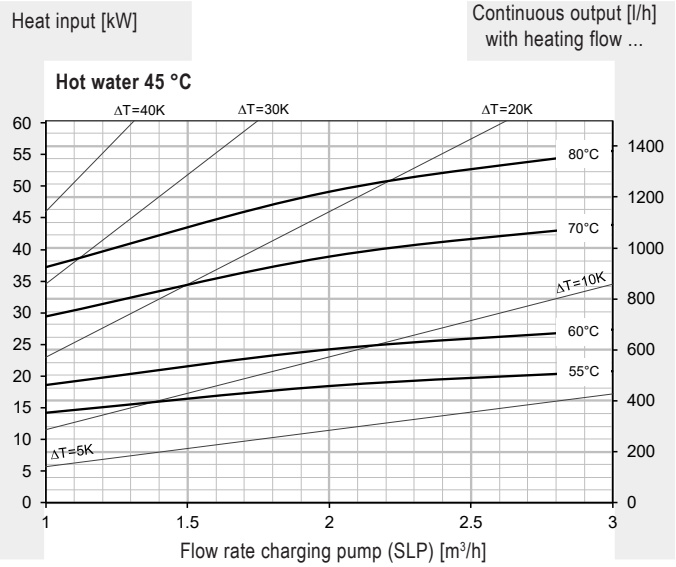

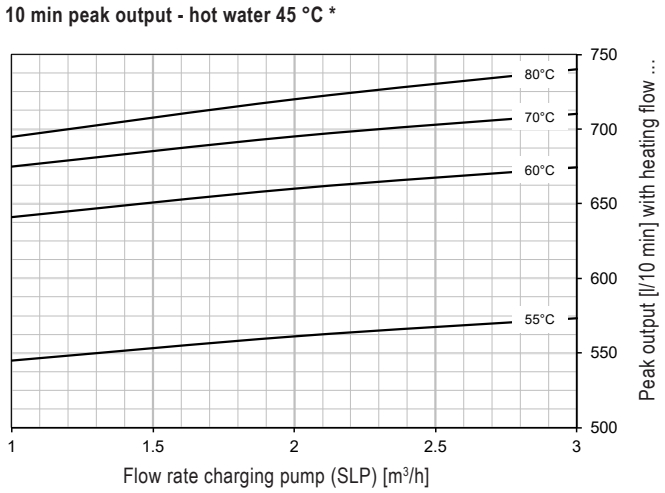

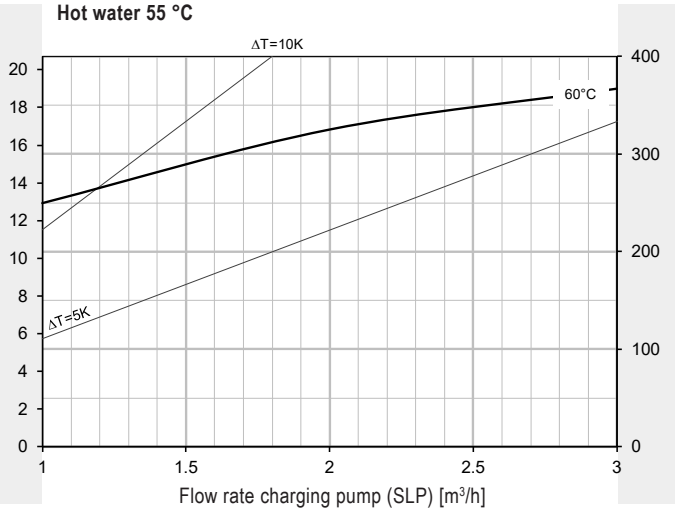

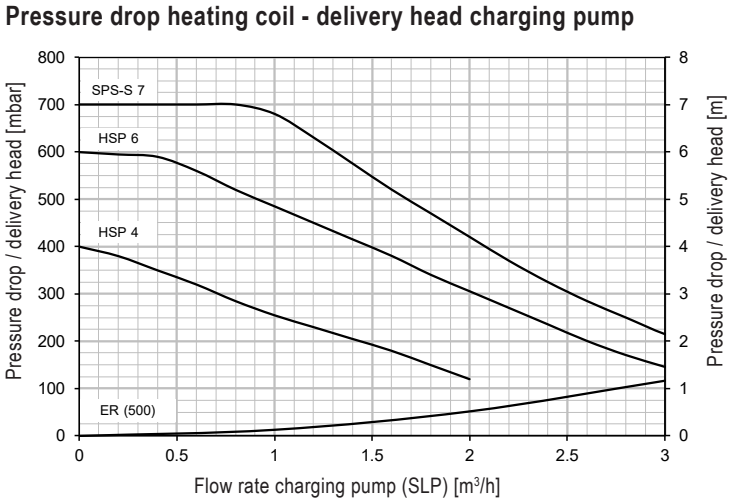

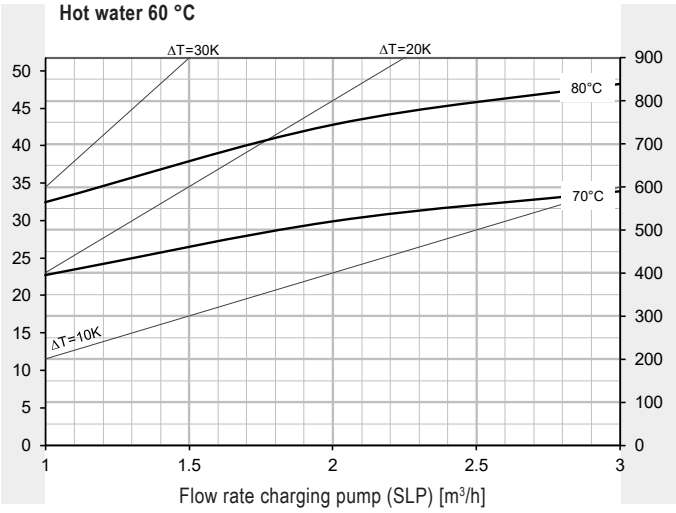

* Calorifier heated to 60 °C

CombiVal ER (800)

Hot water output
Continuous output

Reading example
see engineering

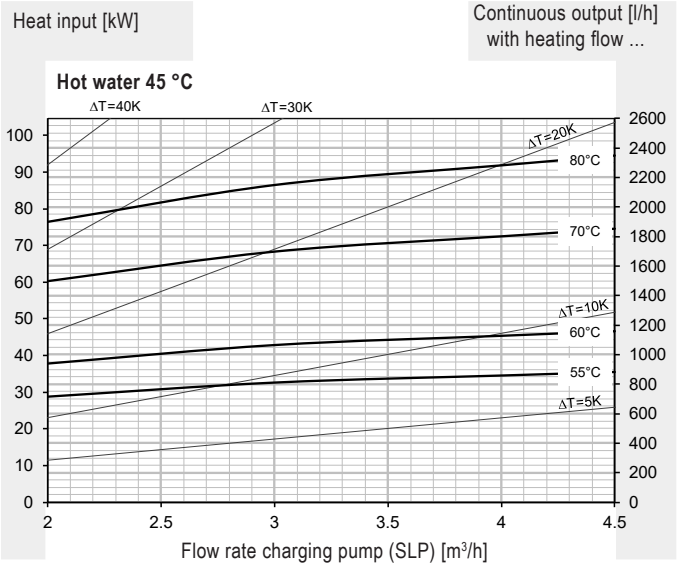

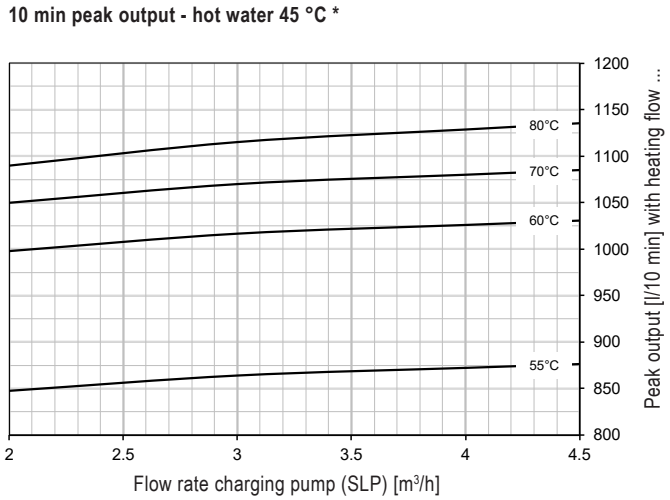

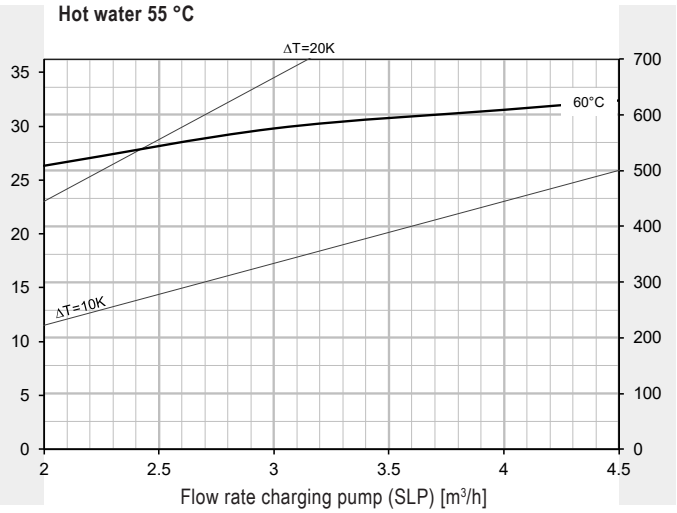

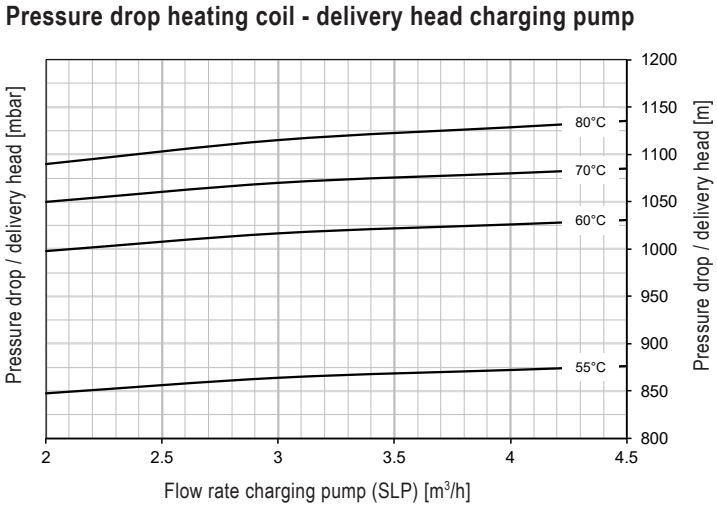

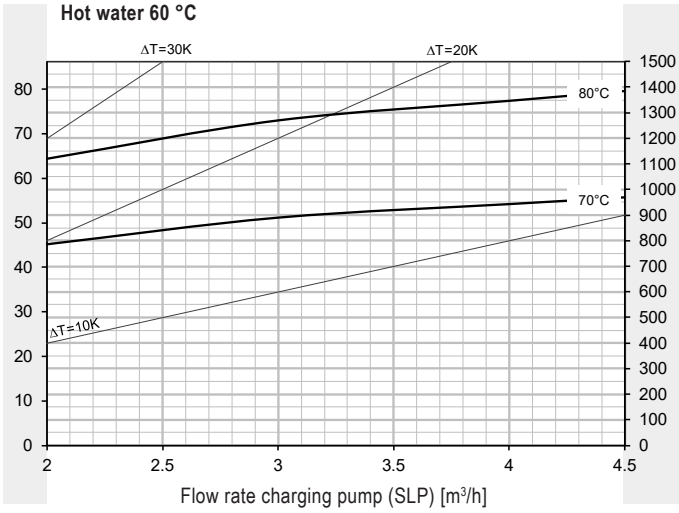

* Calorifier heated to 60 °C

CombiVal ER (1000)

Hot water output
Continuous output

Reading example
see engineering

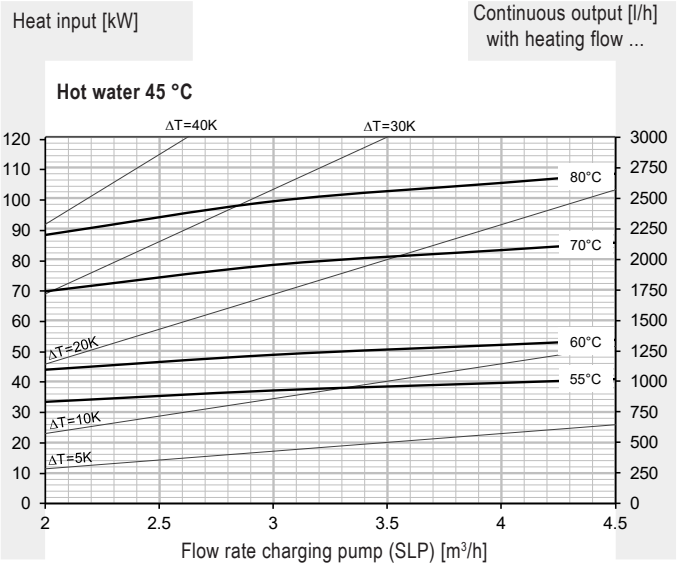

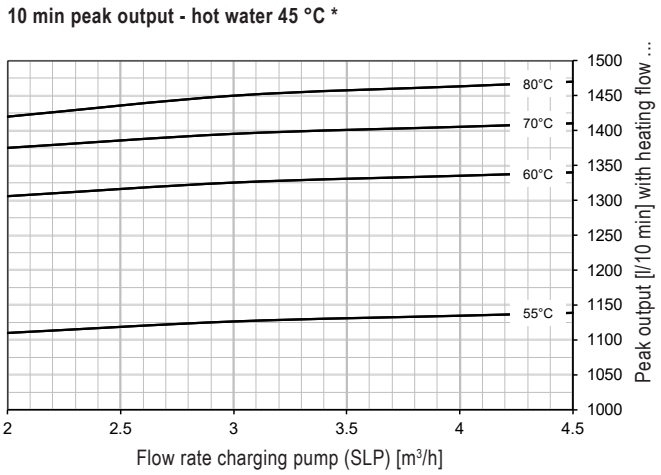

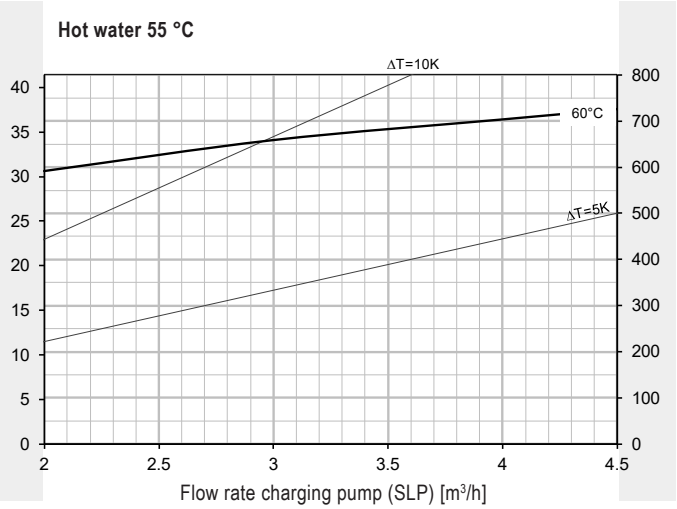

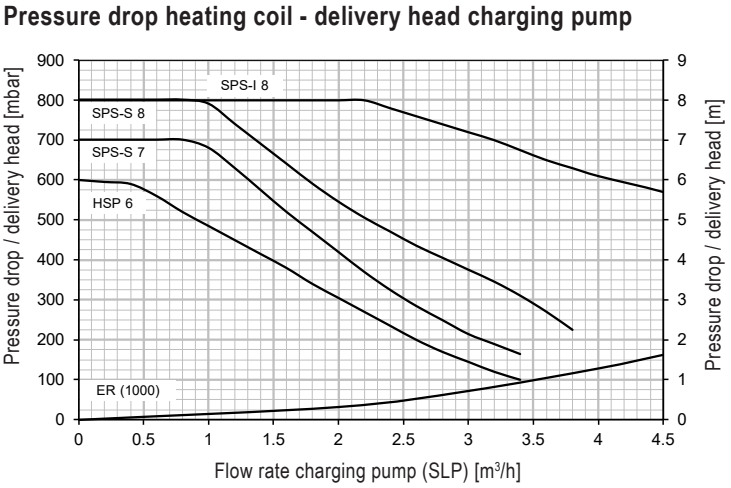

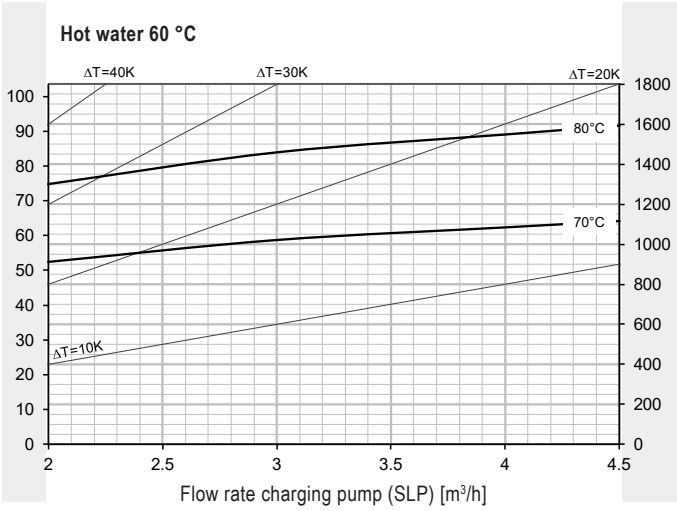

* Calorifier heated to 60 °C

CombiVal ER (200-500)
(Dimensions in mm)

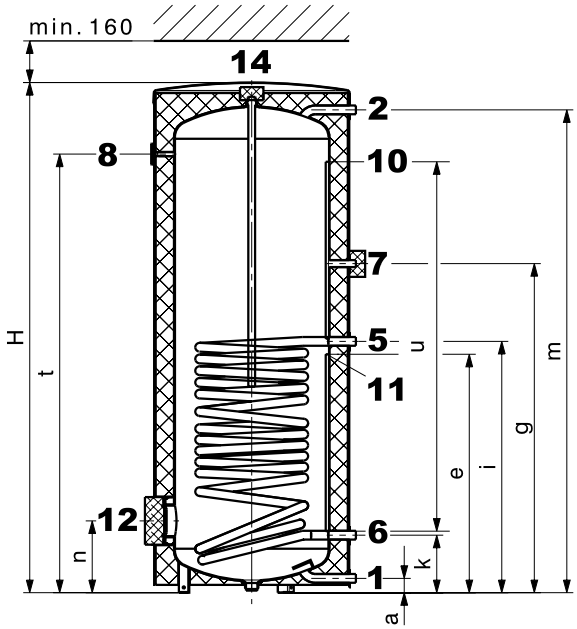

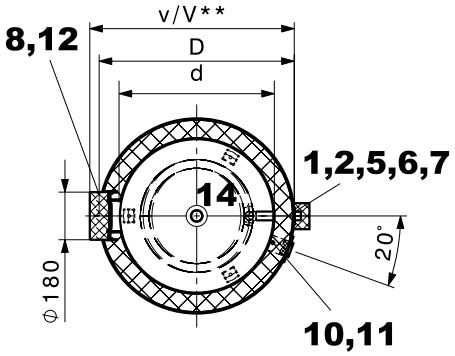

CombiVal ER (800,1000)

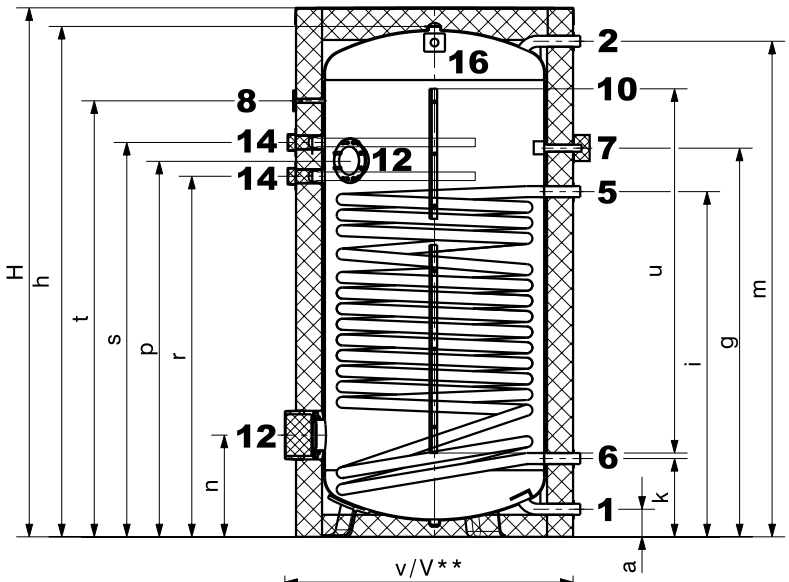

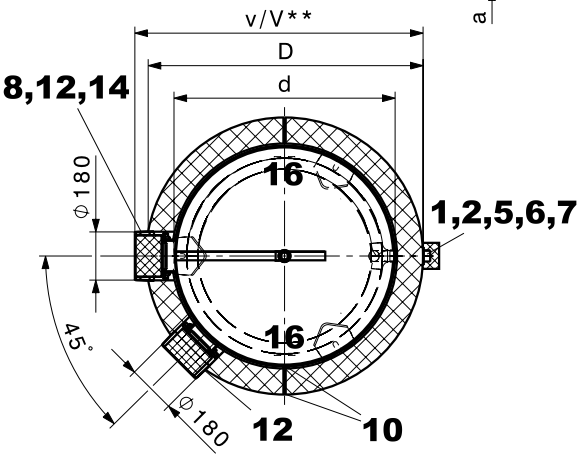

1	Cold water	type (200)	G ¾″	(ET)
		type (300-500)	G 1″	(ET)
		type (800,1000)	G 1¼″	(ET)
2	Domestic hot water	type (200)	G ¾″	(ET)
		type (300-500)	G 1″	(ET)
		type (800,1000)	G 1¼″	(ET)
5	Heating flow	type (200-500)	G 1″	(ET)
		type (800,1000)	G 1¼″	(ET)
6	Heating return	type (200-500)	G 1″	(ET)
		type (800,1000)	G 1¼″	(ET)
7	Circulation (removable insulated cap Ø 100 mm)		G ¾″	(ET)
8	Thermometer			

Variation because of the production tolerance possible
Dimension +/- 10 mm

10	Sensor channel, inner Ø 11 mm	type (200-500)	
	Sensor terminal strip (zip fastener)	type (800,1000)	
11	Removable cap (Ø 60 mm) for positioning the sensor in the sensor channel	type (200-500)	
12	Hand-hole flange (flange-mounted electric heating element) Ø 180/120 mm, hole circle 150 mm, 8 x M10 (Mounting of a flange-mounted electric heating element: - bottom, possible. - top, not possible.)		
14	Anode sleeve	type (200-500)	Rp 1″ (IT)
		type (800,1000)	Rp 1¼″ (IT)
	Screw connection uninsulated		
16	Transport strap	type (800,1000)	

CombiVal ER type	D	d	H	h	a	e	g	i	k	m	n	p	r	s	t	u	v	V**	Tilting dimension
(200)	600	450	1464	-	55	680	902	689	194	1373	249	-	-	-	1229	1060	635	650	1583
(300)	700	597	1326	-	55	609	921	721	221	1229	276	-	-	-	1069	860	795	810	1524
(400)	750	597	1623	-	55	747	1112	909	221	1526	276	-	-	-	1356	1060	795	810	1788
(500)	750	597	1953	-	55	917	1265	966	221	1856	276	-	-	-	1686	1360	795	810	2093
(800)	950	750	2040	1937	105	-	1422	1319	293	1891	383	1408	1348	1478	1648	1400	975	1020	1962
(1000)	1050	850	2063	1962	106	-	1494	1327	301	1905	391	1446	1386	1516	1676	1400	1075	1120	1991

** when using a flange-mounted electric heating element

Hoval calorifier
CombiVal ESR (200-400)

- Calorifier made of steel enamelled inside
- Large smooth pipe heat exchanger enamelled, built in
- Magnesium protection anode built in
- Flange for electric heating element
- Thermal insulation made of polyurethane hard foam foamed on the calorifier
- Dismantable foil casing, red coloured
- Including thermometer
- Sensor channel

On request
- Flange-mounted electric heating element

Delivery
- Calorifier with foil casing installed

Range

CombiVal type		
ESR	(200)	B
ESR	(300)	B
ESR	(400)	B

Calorifier

CombiVal ESR (200-400)

Calorifier made of steel enamelled inside.
With smooth pipe heat exchanger, built in.

CombiVal ESR type		Volume dm³	Heating surface m²	Part No.
(200)	B	193	1.8	7015 965
(300)	B	298	2.6	7015 966
(400)	B	379	3.8	7015 967

Electric heating elements
see chapter “Electric heating elements”

Accessories

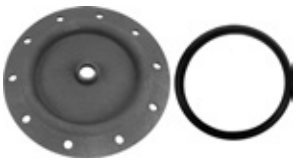

Flange cover 180 - ¾″ — 2077 035
for the installation of the Correx®
impressed current anode in flange
Ø 180/110 mm,
enamelled on the inside with Rp ¾″
sleeve
Seal included

Flange with immersion sleeve for temperature sensor made of steel on DHW side, enamelled inside. — 6028 468
Flange dimensions:
- Outer Ø 180 mm,
- Pitch circle Ø 150 mm, 8 x M10
Immersion sleeve dimensions:
- Installation length = 120 mm,
- Outer Ø: 24 mm, inner Ø: 20 mm

Kit Correx® impressed current anode UP2.3-919-L395/1 — 684 760
for long-term corrosion protection for
installation in the enamelled calorifier
with reduction R 1¼″ (ET) – Rp 1″ (IT)
and R 1″ (ET) – Rp ¾″ (IT)
Installation length: 395 mm
Connection cable length: 1 x 2000 mm
1 Correx® impressed current anode

In every case, **either** a Correx® impressed current anode **or** one/two magnesium anodes are allowed to be used.

		Part No.
	**Immersion sensor TF/2P/5/6T, L = 5.0 m with plug** for TopTronic® E controller modules/ module expansions with exception of basic module district heating/fresh water or basic module district heating com cable length: 5 m with plug sensor sleeve diameter: 6 x 50 mm dewpoint-proof operating temperature: -20…105 °C protection class: IP67	2056 788
	**Immersion sensor TF/2P/5/6T, L = 5.0 m** for TopTronic® E controller modules/ module expansions with exception of basic module district heating/fresh water or basic module district heating com, cable length: 5 m without plug sensor sleeve diameter: 6 x 50 mm, dewpoint-proof, operating temperature: -20…105 °C, protection class: IP67	2055 888
	**Immersion sensor TF/12N/2.5/6T, L = 2.5 m** for gas boiler with RS-OT Cable length: 2.5 m Sensor sleeve diameter: 6 x 50 mm, dewpoint-proof, operating temperature: -20…105 °C, protection class: IP67	2056 791
At TopTronic® E, immersion sensor is included in the boiler controller or in the heating controller set.		
	**Calorifier thermostat control TW 12** Universal thermostat controller for thermostatic pump charge demand, setting in casing, visible from outside. 15-95 °C, switching difference 6 K, capillar length 700 mm incl. fastening material for Hoval calorifier, can be used with integrated immersion sleeve	6010 080
Thermal water mixer see “Various system components”		

Services

Commissioning
Commissioning by works service or Hoval trained authorised serviceman/company is condition for warranty.

For commissioning and other services please contact your Hoval sales office.

CombiVal ESR (200-400)

Type		(200)	(300)	(400)
• Volume	dm^3	193	298	379
• Max. operating pressure/test pressure	bar	10/13	10/13	10/13
• Max. operating temperature	°C	95	95	95
• Thermal insulation PU-foam, foamed onto calorifier	mm	75	50	75
• Thermal insulation λ	W/mK	0.027	0.027	0.027
• Fire protection class		B2	B2	B2
• Heat loss at 65 °C	W	48	68	68
• Transport weight	kg	91	118	156
• U value	W/m^2K	0.32	0.41	0.32
Heating battery (built in)				
• Heating surface	m^2	1.8	2.6	3.8
• Heating water content	dm^3	12.2	16	34
• Flow resistance [1)]	z value	13	17	6
• Max. operating pressure/test pressure	bar	10/13	10/13	10/13
• Max. operating temperature	°C	110	110	110
• Dimensions		see table of dimensions		

[1)] Flow resistance heating battery in mbar = flow rate $(m^3/h)^2$ x z (1 mbar = 0.1 kPa)

Performance figure

Selection of the calorifier type
at a hot water temperature of 45 °C

Reading example
see engineering

	Comfort [1]			Standard [2]		
T >	60 °C	70 °C	80 °C	60 °C	70 °C	80 °C
NL v						
1				200		
2	200					
3						
4	300			300		
5		200			200	
6	400		200	400		200
7						
8						
9		300				
10			300		300	
11						300
12						
13						
14		400				
15						
16						
17					400	
18			400			
19						
20						
21						
22						400
23						
24						
25						
26						
27						
28						
29						
30						
31						
32						
33						
34						
35						
36						
37						
38						
39						
40						
41						
42						
43						
44						
45						
46						
47						
48						
49						
50						

	Comfort [1]			Standard [2]		
T >	60 °C	70 °C	80 °C	60 °C	70 °C	80 °C
NL v						
51						
52						
53						
54						
55						
56						
57						
58						
59						
60						
61						
62						
63						
64						
65						
66						
67						
68						
69						
70						
71						
72						
73						
74						
75						
76						
77						
78						
79						
80						
81						
82						
83						
84						
85						
86						
87						
88						
89						
90						
91						
92						
93						
94						
95						
96						
97						
98						
99						
100						

T = heating flow
NL = performance figure
Performance figure NL acc. to DIN 4708 = number of flats which can be supplied with domestic hot water when the calorifier is heated and permanently reheated with the heat generator (standard flat: 1 bathroom - 4 rooms - 3.5 persons)
[1] Calculation with simultaneity factor according to DIN 4708 (preferred for Switzerland)
[2] Calculation with simultaneity factor according to Dresden Technical University

10 min peak output/N number with domestic hot water 45 °C
according to DIN 4708 (Comfort) and Dresden Technical University (Standard)

Reading example
see Engineering

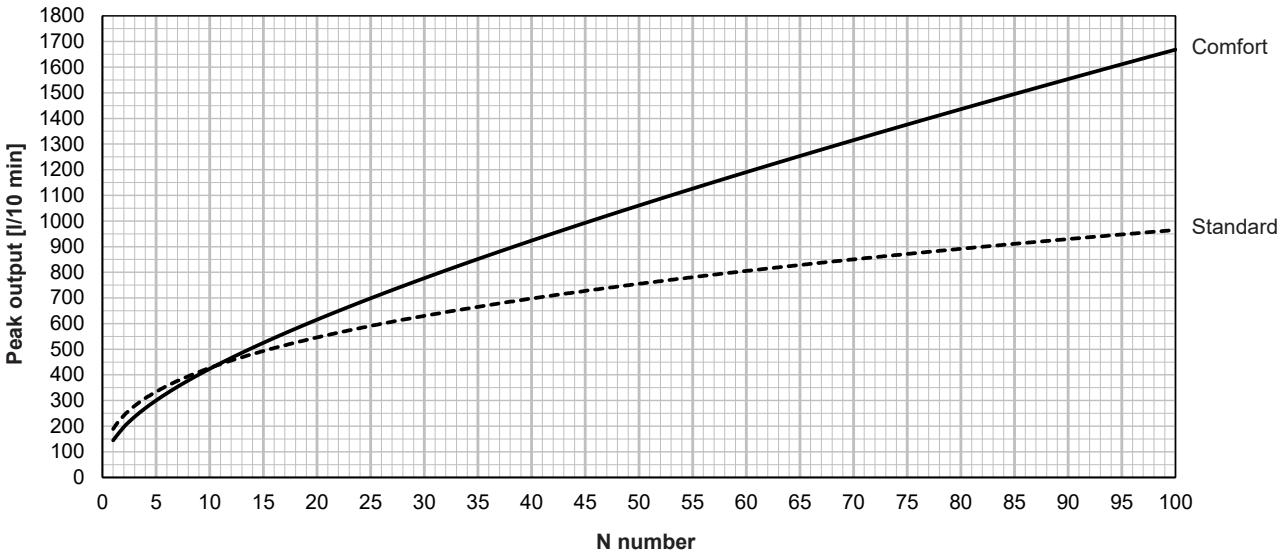

CombiVal ESR (200)

Hot water output
Continuous output

Reading example
see engineering

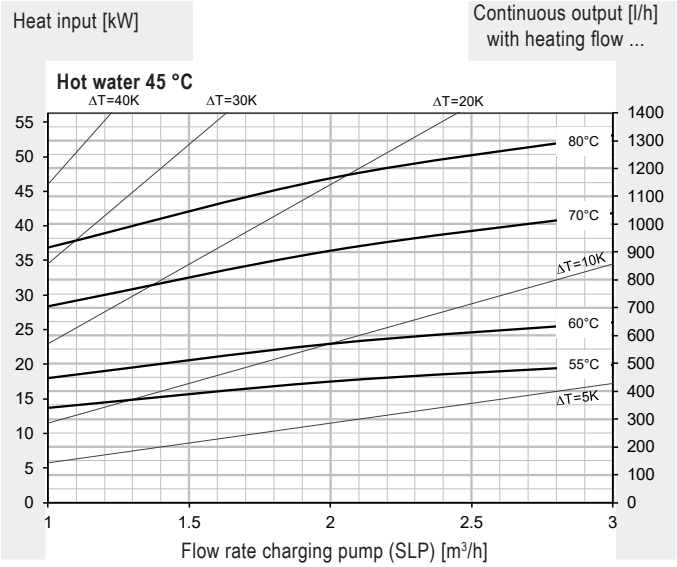

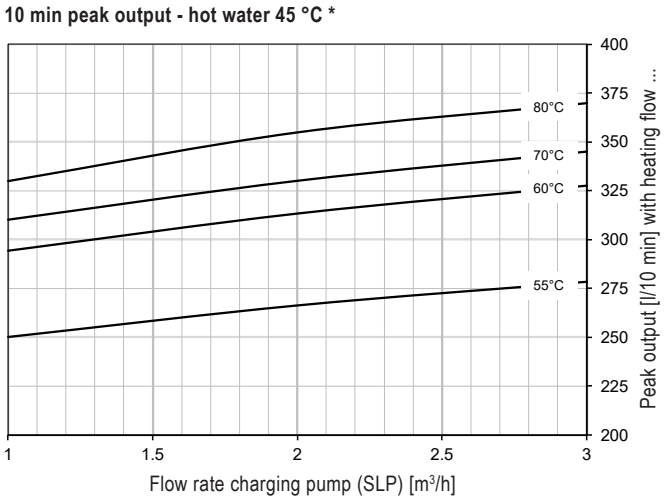

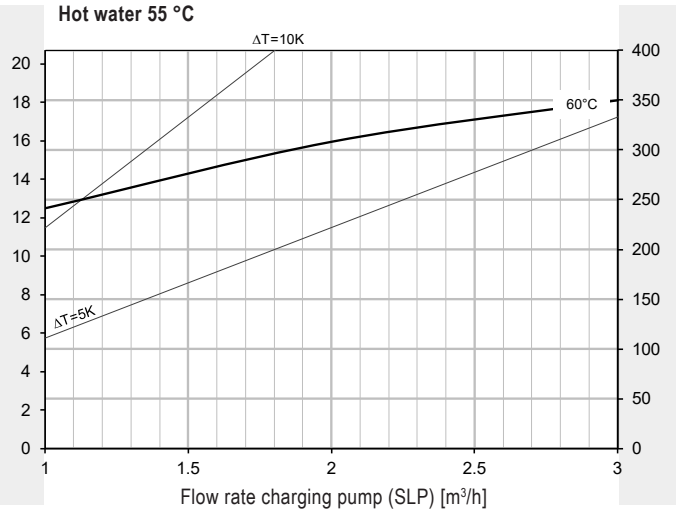

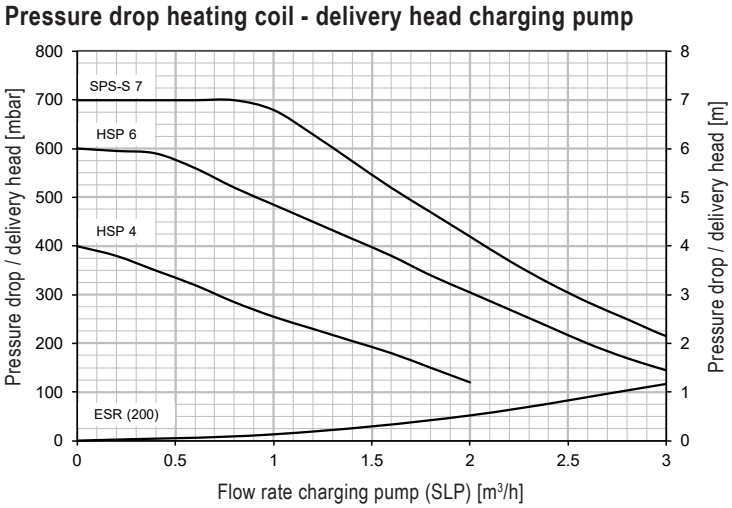

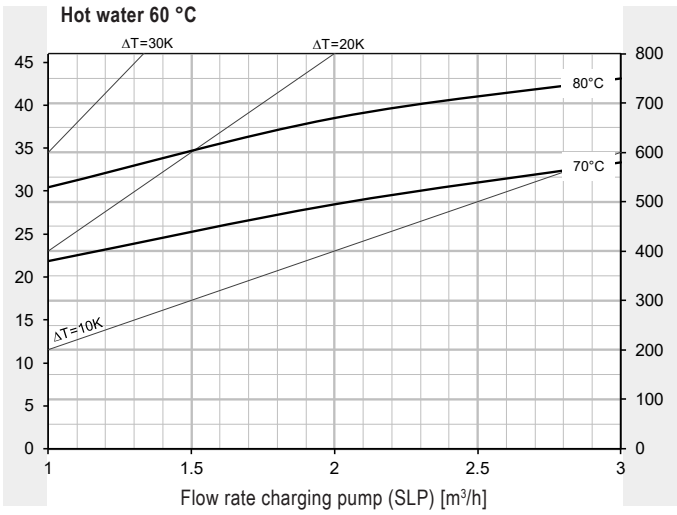

* Calorifier heated to 60 °C

CombiVal ESR (300)

Hot water output
Continuous output

Reading example
see engineering

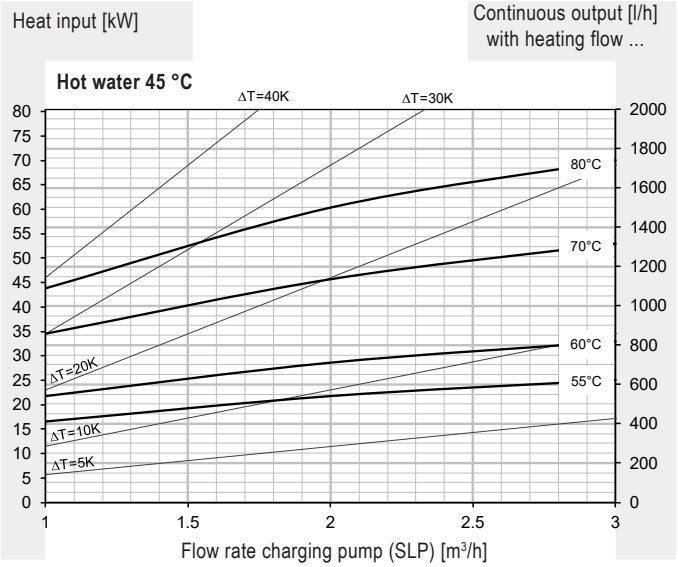

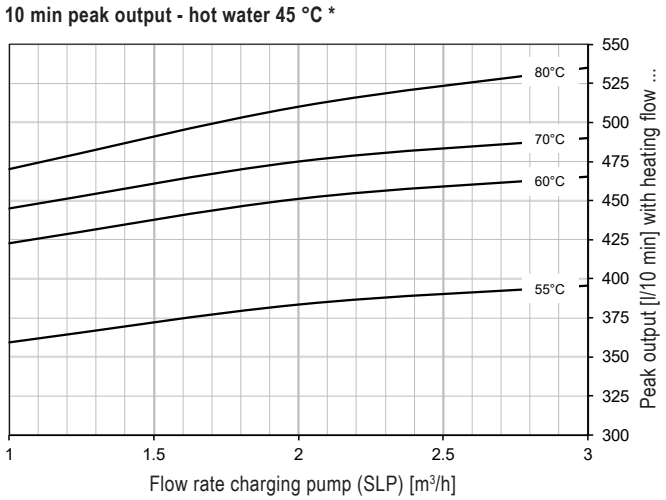

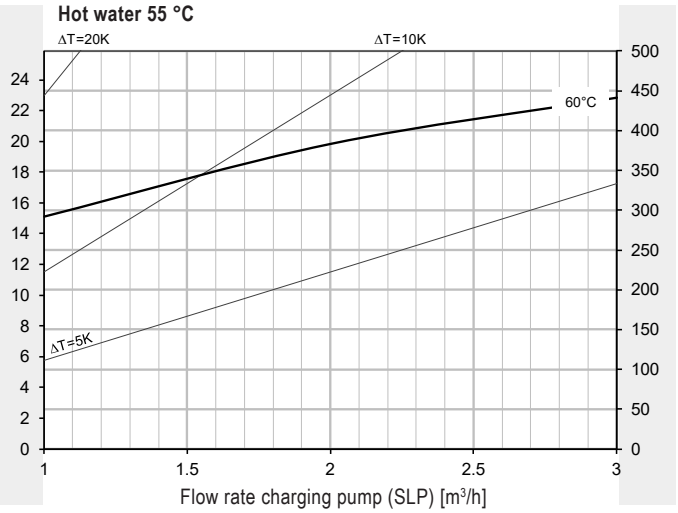

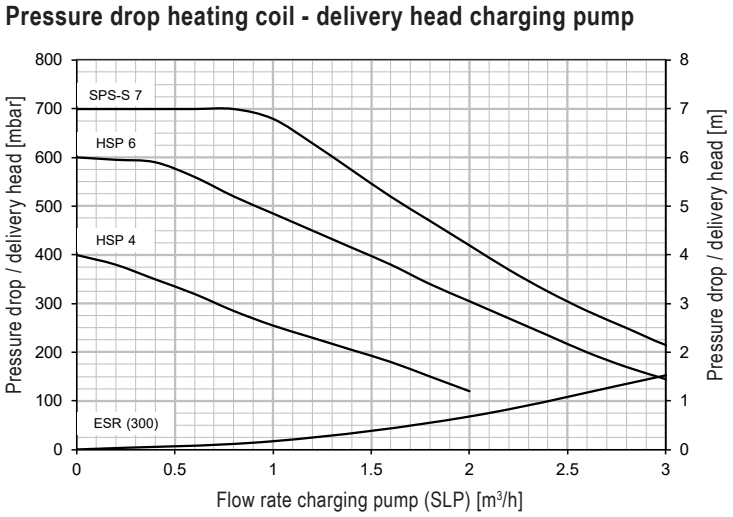

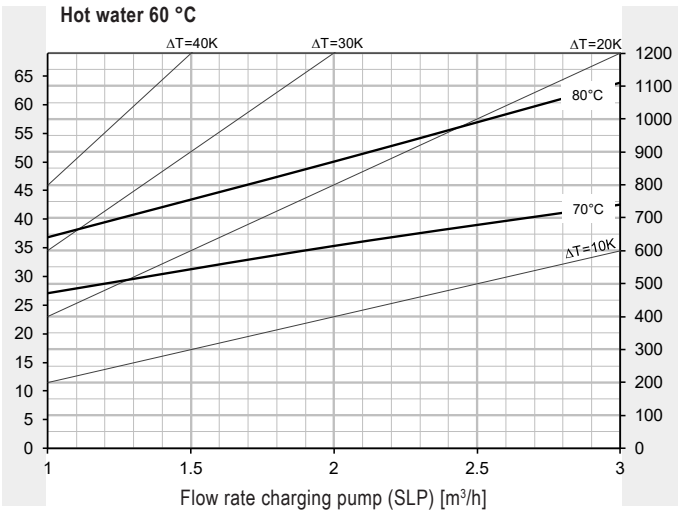

* Calorifier heated to 60 °C

CombiVal ESR (400)

Hot water output
Continuous output

Reading example
see engineering

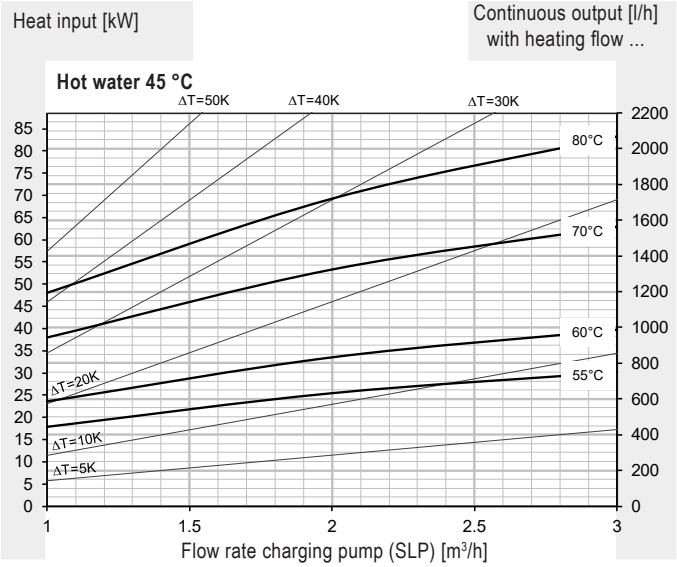

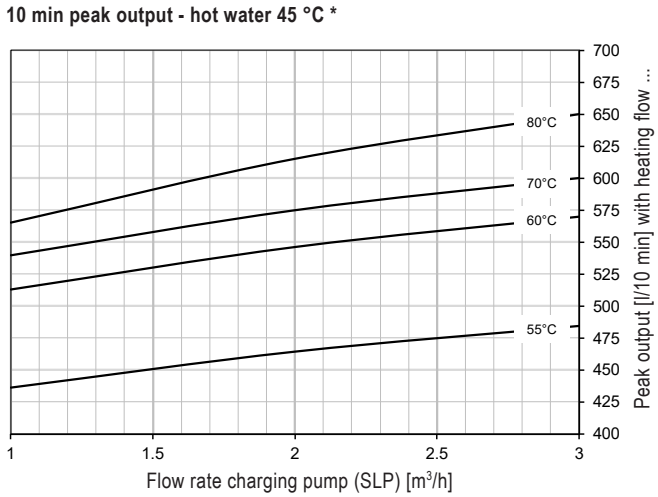

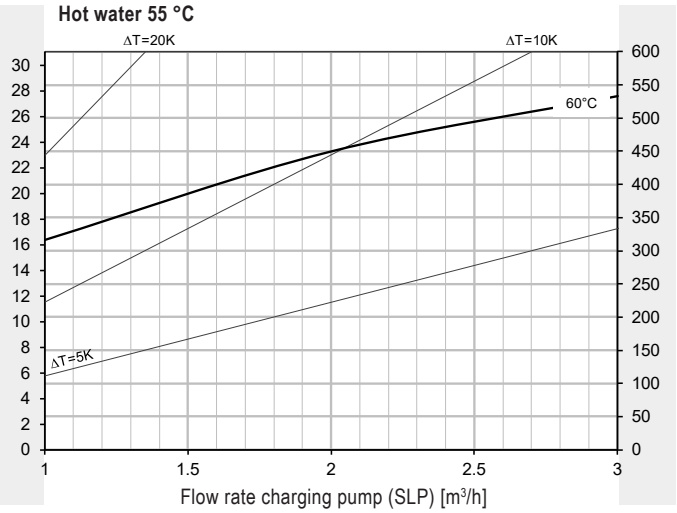

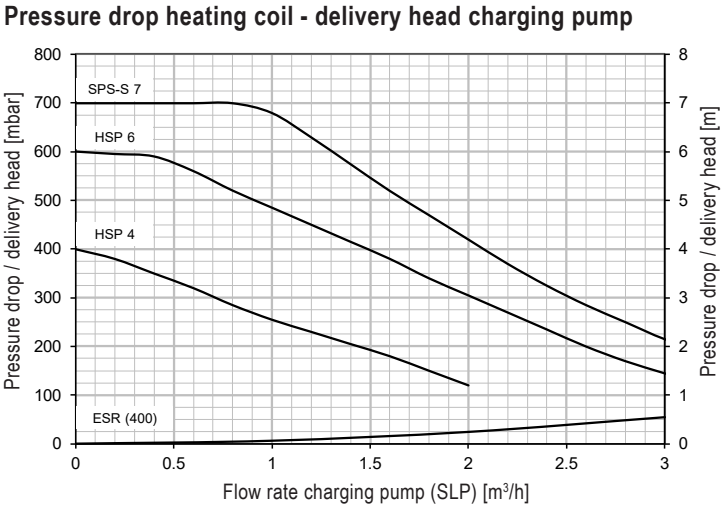

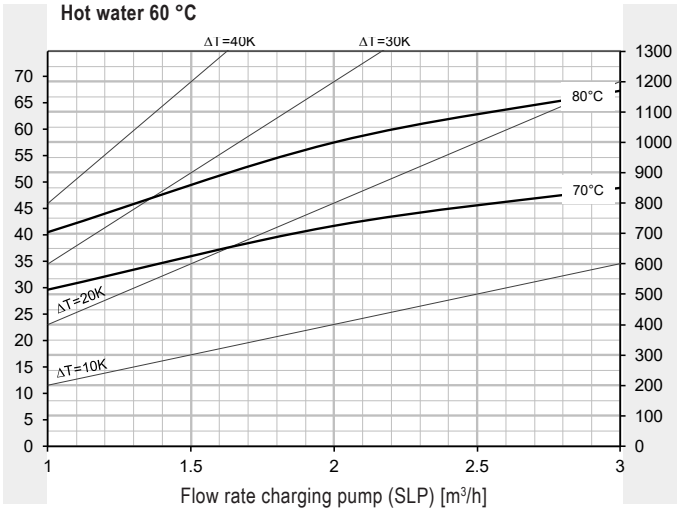

* Calorifier heated to 60 °C

CombiVal ESR (200-400)

(Dimensions in mm)

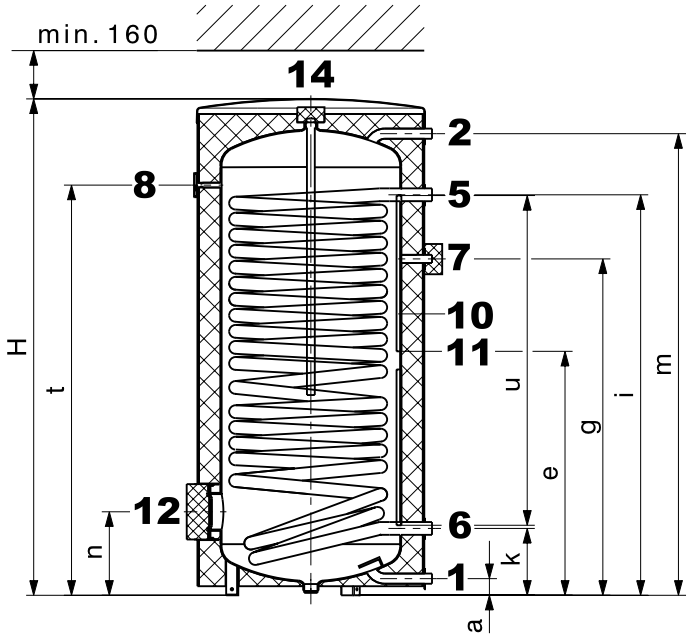

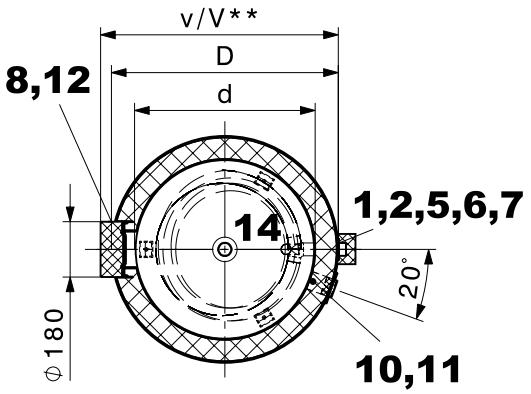

1	Cold water	type (200)	G ¾″	(ET)	10	Sensor channel, inner Ø 11 mm	
		type (300,400)	G 1″	(ET)	11	Removable cap (Ø 60 mm)	
2	Domestic hot water	type (200)	G ¾″	(ET)		for positioning the sensor in the sensor channel	
		type (300,400)	G 1″	(ET)	12	Hand-hole flange (flange-mounted electric heating element)	
5	Heating flow	type (200,300)	G 1″	(ET)		Ø 180/120 mm, pitch circle 150 mm, 8 x M10	
		type (400)	G 1¼″	(ET)	14	Anode sleeve	Rp 1″ (IT)
6	Heating return	type (200,300)	G 1″	(ET)		Screw connection uninsulated	
		type (400)	G 1¼″	(ET)			
7	Circulation (removable insulated cap Ø 100 mm)		G ¾″	(ET)			
8	Thermometer						

Variation because of the production tolerance possible
Dimension +/- 10 mm

CombiVal ESR type	D	d	H	a	e	g	i	k	m	n	t	u	v	V**	Tilting dimension
(200)	600	450	1464	55	740	789	902	194	1373	249	1229	1060	635	650	1583
(300)	700	597	1326	55	669	850	991	221	1229	276	1069	860	745	760	1524
(400)	750	597	1629	55	807	1112	1324	221	1526	276	1359	1060	795	810	1788

** when using a flange-mounted electric heating element

Hoval calorifier CombiVal ESSR (500)

- Calorifier made of steel enamelled inside
- Pipe register with extra large heating surface as heat exchanger, enamelled, built in
- Magnesium protection anode built in
- Flange for electric heating element
- Thermal insulation made of polyurethane hard foam foamed on the calorifier
- Dismantable foil casing, red coloured
- Sensor channel
- Including thermometer

On request
- Flange-mounted electric heating element
- Screw-in electric heating element 1½"

Delivery
- Calorifier with foil casing installed

Hoval calorifier CombiVal ESSR (800,1000)

- Calorifier made of steel, enamelled inside
- Pipe register with large heating surface as heat exchanger, enamelled, built in
- Correx® potentiostat included
- 2 impressed current anodes incl. connecting cable integrated
- Flange below as cleaning flange or for the installation of a flange-mounted electric heating element or blank flange with immersion sleeve
- Flange above as additional cleaning flange or for the installation of a flange-mounted electric heating element
- Thermal insulation made of polyester fleece with foil jacket, red coloured
- Two terminal bars for contact sensor
- Including thermometer

On request
- Flange-mounted electric heating element

Delivery
- Calorifier and thermal insulation completely installed (can be removed for installation)

Range

CombiVal type		
ESSR	(500)	B
ESSR	(800)	
ESSR	(1000)	

Calorifier

CombiVal ESSR (500-1000)

Calorifier made of steel enamelled inside.
Pipe register as heat exchanger enamelled, built in

CombiVal ESSR type		Volume dm³	Heating surface m²	Part No.
(500)	B	465	5.90	7015 970
(800)		733	7.00	7018 051
(1000)		961	9.15	7018 052

Electric heating elements
see chapter “Electric heating elements”

Accessories

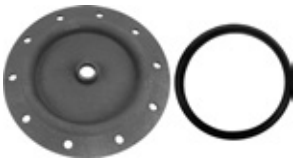

Flange cover 180 - ¾″ — 2077 035
for the installation of the Correx®
impressed current anode in flange
Ø 180/110 mm,
enamelled on the inside with Rp ¾″
sleeve
Seal included

Flange with immersion sleeve for temperature sensor made of steel on DHW side, enamelled inside. — 6028 468
Flange dimensions:
- Outer Ø 180 mm,
- Pitch circle Ø 150 mm, 8 x M10

Immersion sleeve dimensions:
- Installation length = 120 mm,
- Outer Ø: 24 mm, inner Ø: 20 mm

Kit Correx® impressed current anode UP2.3-919-L395/1 — 684 760
for long-term corrosion protection for
installation in the enamelled calorifier
with reduction R 1¼″ (ET) – Rp 1″ (IT)
and R 1″ (ET) – Rp ¾″ (IT)
Installation length: 395 mm
Connection cable length: 1 x 2000 mm
1 Correx® impressed current anode

Included in the scope of delivery for ESSR (800,1000).

In every case, **either** a Correx® impressed current anode **or** one/two magnesium anodes are allowed to be used.

		Part No.
	**Immersion sensor TF/2P/5/6T, L = 5.0 m with plug** for TopTronic® E controller modules/ module expansions with exception of basic module district heating/fresh water or basic module district heating com cable length: 5 m with plug sensor sleeve diameter: 6 x 50 mm dewpoint-proof operating temperature: -20…105 °C protection class: IP67	2056 788
	**Immersion sensor TF/2P/5/6T, L = 5.0 m** for TopTronic® E controller modules/ module expansions with exception of basic module district heating/fresh water or basic module district heating com, cable length: 5 m without plug sensor sleeve diameter: 6 x 50 mm, dewpoint-proof, operating temperature: -20…105 °C, protection class: IP67	2055 888
	**Immersion sensor TF/12N/2.5/6T, L = 2.5 m** for gas boiler with RS-OT Cable length: 2.5 m Sensor sleeve diameter: 6 x 50 mm, dewpoint-proof, operating temperature: -20…105 °C, protection class: IP67	2056 791
At TopTronic® E, immersion sensor is included in the boiler controller or in the heating controller set.		
	**Calorifier thermostat control TW 12** Universal thermostat controller for thermostatic pump charge demand, setting in casing, visible from outside. 15-95 °C, switching difference 6 K, capillar length 700 mm incl. fastening material for Hoval calorifier, can be used with integrated immersion sleeve	6010 080
Thermal water mixer see “Various system components”		

Services

Commissioning
Commissioning by works service or Hoval trained authorised serviceman/company is condition for warranty.

For commissioning and other services please contact your Hoval sales office.

CombiVal ESSR (500-1000)

Type		(500)	(800)	(1000)
• Volume	dm^3	465	733	961
• Max. operating pressure/test pressure	bar	10/13	10/13	10/13
• Max. operating temperature	°C	95	95	95
• Thermal insulation PU foam, foamed onto calorifier	mm	75	-	-
• Thermal insulation λ	W/mK	0.027	0.027	0.027
• Thermal insulation polyester fleece	mm	-	100	100
• Fire protection class		B2	B2	B2
• Heat loss at 65 °C	W	78	126	144
• Transport weight	kg	232	304	387
• U value	W/m^2K	0.316	0.374	0.375
Heating battery (built in)				
• Heating surface	m²	5.9	7	9.15
• Heating water	dm³	41	49.4	64.6
• Flow resistance [1)]	z value	10	11	14
• Max. operating pressure/test pressure	bar	10/13	10/13	10/13
• Max. operating temperature	°C	110	110	110
• Dimensions		see table of dimensions		

[1)] Flow resistance heating battery in mbar = flow rate (m³/h)² x z (1 mbar = 0.1 kPa)

Performance figure

Selection of the calorifier type
at a hot water temperature of 45 °C

Reading example
see engineering

	Comfort [1]			Standard [2]		
T >	60 °C	70 °C	80 °C	60 °C	70 °C	80 °C
NL v						
1						
2						
3						
4						
5						
6						
7						
8						
9						
10						
11						
12	500					
13						
14				500		
15						
16						
17						
18	800					
19						
20						
21		500				
22				800		
23						
24	1000					
25						
26					500	
27						
28			500			
29						
30						
31						
32						
33						
34						
35						
36				1000		500
37						
38		800				
39						
40						
41						
42						
43						
44			800			
45						
46						
47						
48		1000				
49					800	
50						

	Comfort [1]			Standard [2]		
T >	60 °C	70 °C	80 °C	60 °C	70 °C	80 °C
NL v						
51						
52						
53						
54						
55						
56						
57						800
58			1000			
59						
60						
61						
62						
63					1000	
64						
65						
66						
67						
68						
69						
70						
71						
72						
73						
74						
75						
76						1000
77						
78						
79						
80						
81						
82						
83						
84						
85						
86						
87						
88						
89						
90						
91						
92						
93						
94						
95						
96						
97						
98						
99						
100						

T = heating flow
NL = performance figure
Performance figure NL acc. to DIN 4708 = number of flats which can be supplied with domestic hot water when the calorifier is heated and permanently reheated with the heat generator (standard flat: 1 bathroom - 4 rooms - 3.5 persons)
[1] Calculation with simultaneity factor according to DIN 4708 (preferred for Switzerland)
[2] Calculation with simultaneity factor according to Dresden Technical University

10 min peak output/N number with domestic hot water 45 °C
according to DIN 4708 (Comfort) and Dresden Technical University (Standard)

Reading example
see Engineering

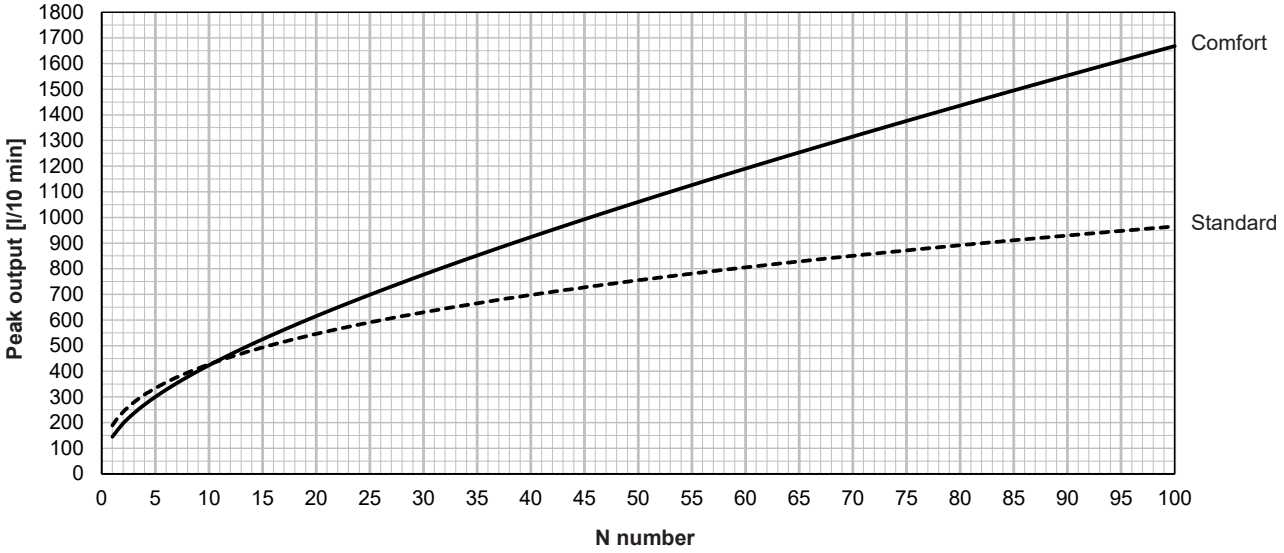

CombiVal ESSR (500)

Hot water output
Continuous output

Reading example
see engineering

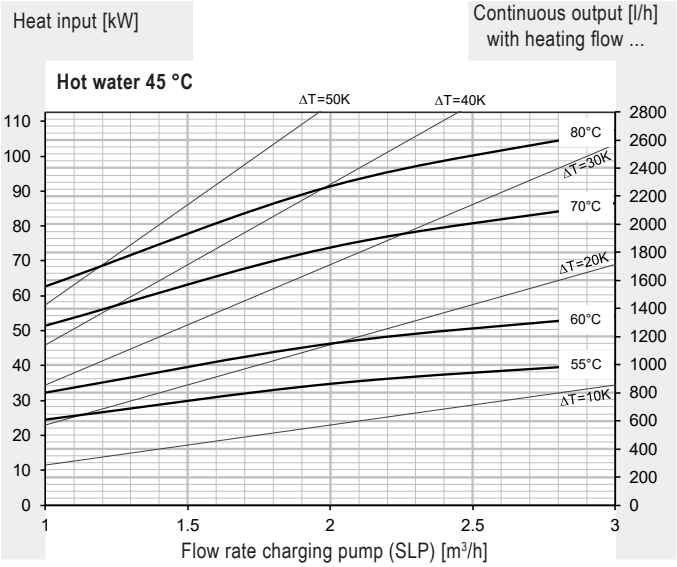

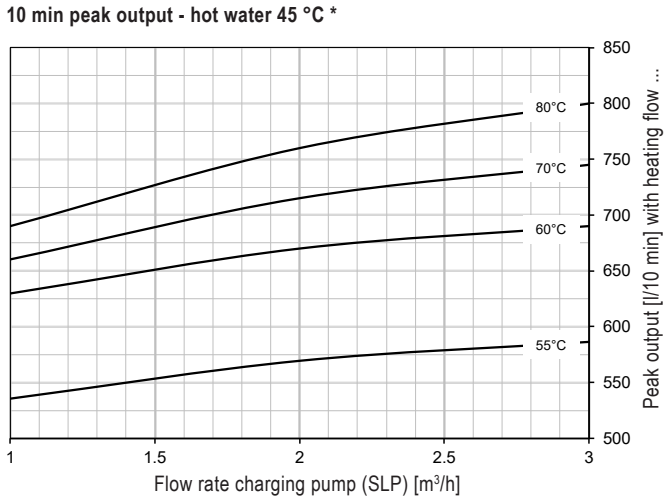

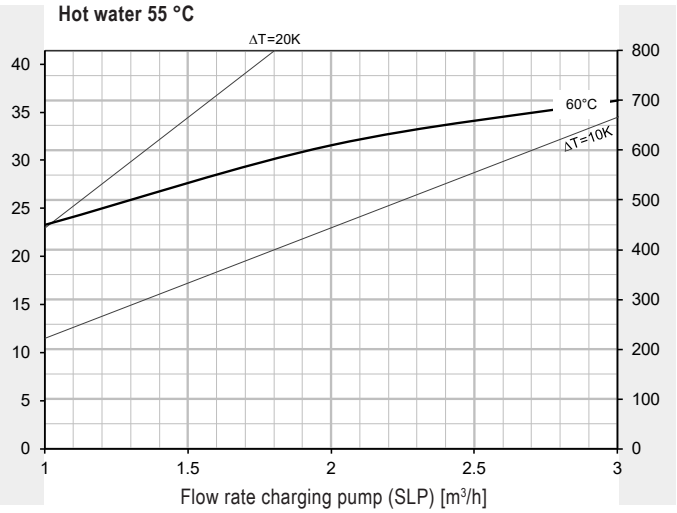

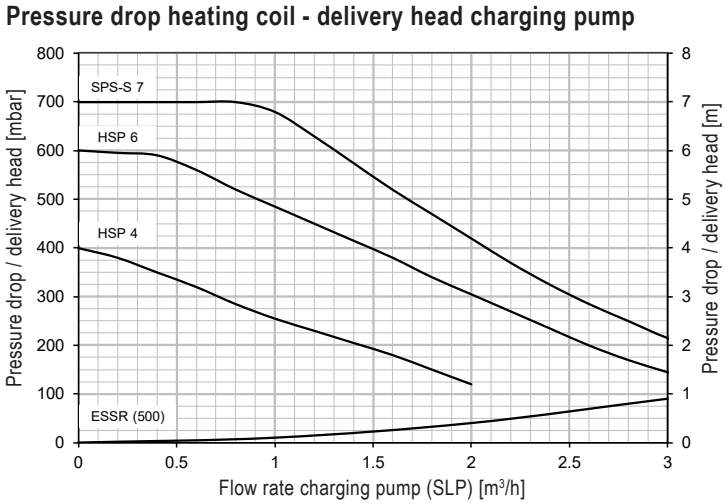

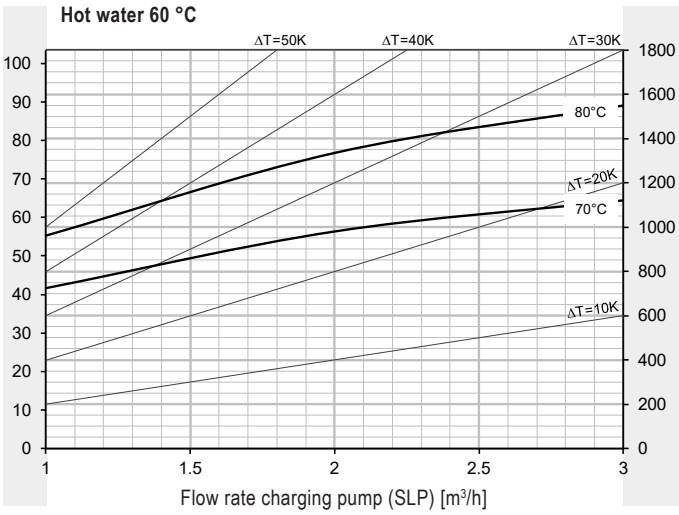

* Calorifier heated to 60 °C

CombiVal ESSR (800)

Hot water output
Continuous output

Reading example
see engineering

Heat input [kW]

Continuous output [l/h] with heating flow ...

Hot water 45 °C

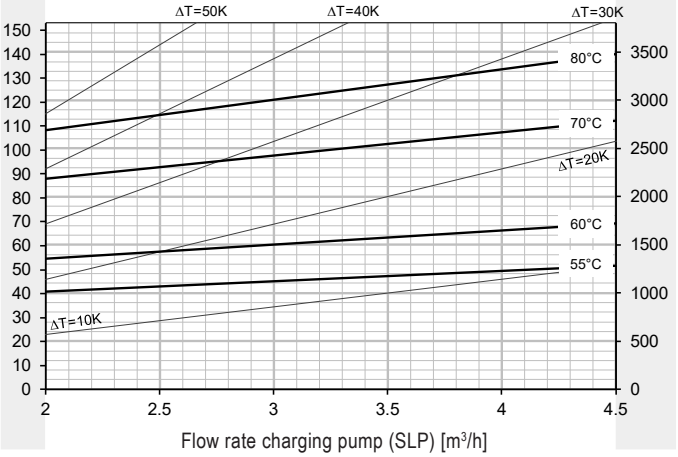

10 min peak output - hot water 45 °C *

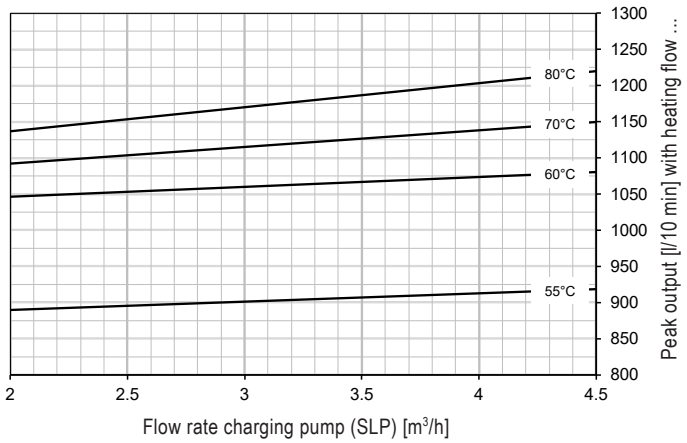

Hot water 55 °C

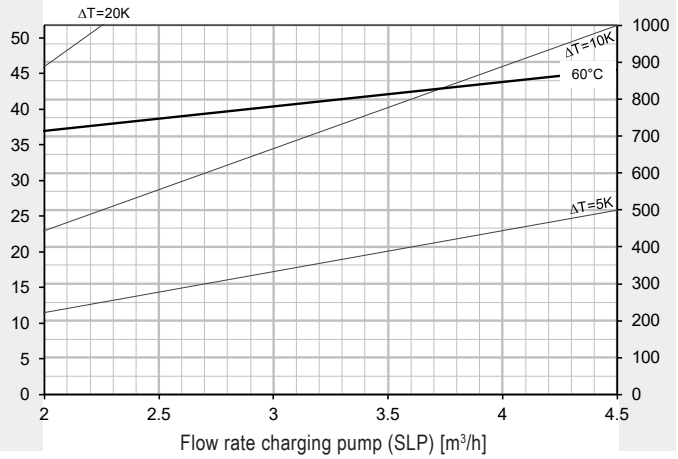

Pressure drop heating coil - delivery head charging pump

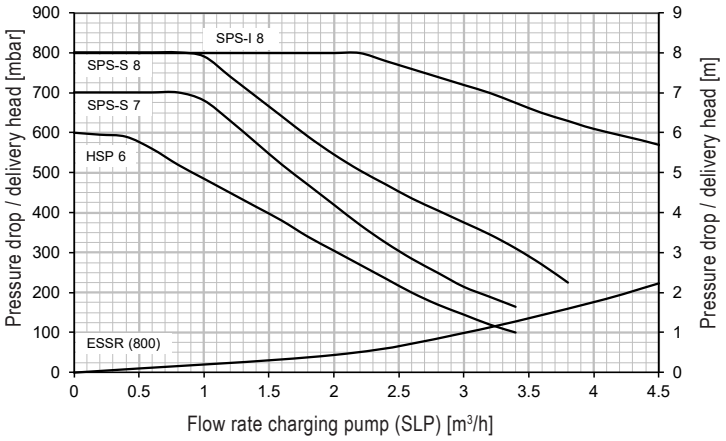

Hot water 60 °C

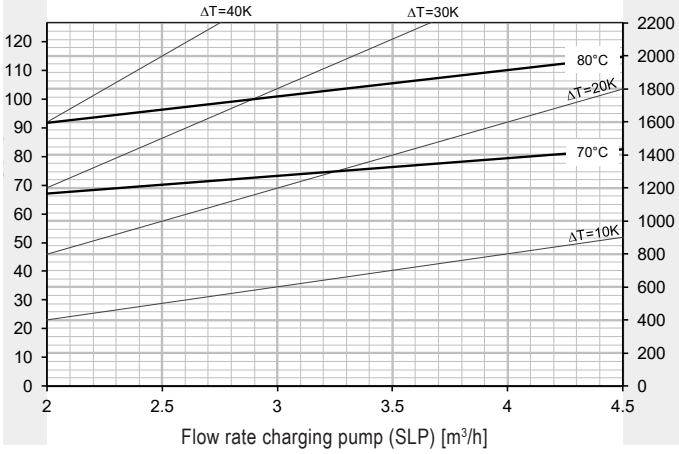

* Calorifier heated to 60 °C

CombiVal ESSR (1000)

Hot water output
Continuous output

Reading example
see engineering

Heat input [kW]

Continuous output [l/h] with heating flow ...

Hot water 45 °C

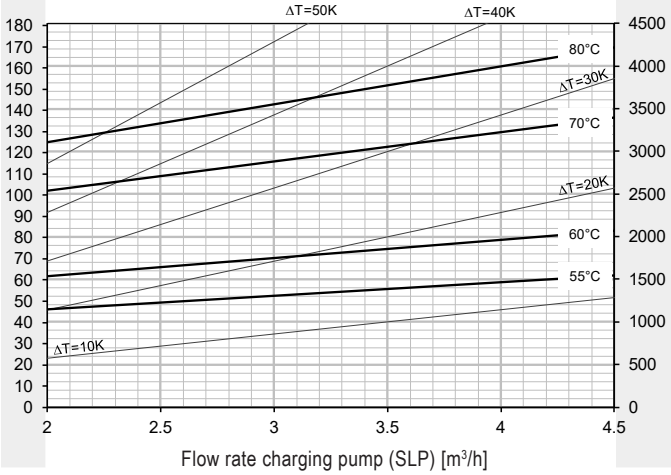

10 min peak output - hot water 45 °C *

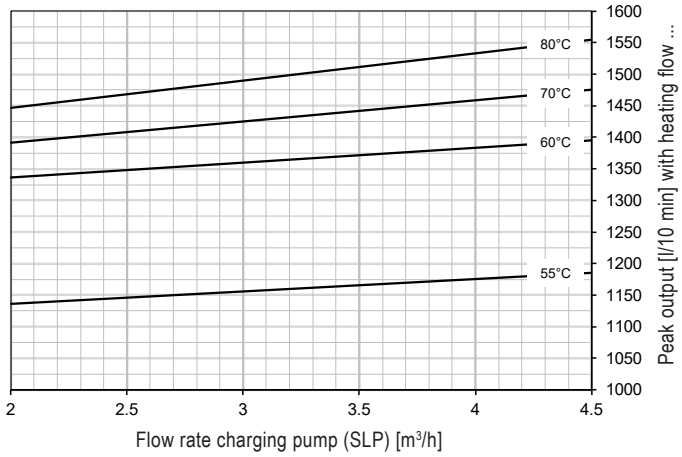

Hot water 55 °C

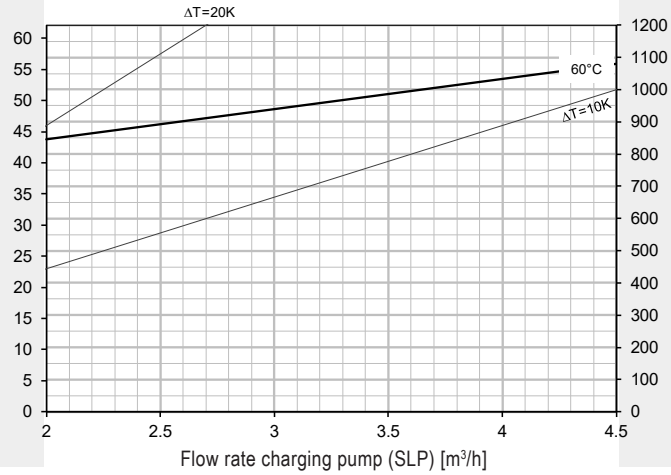

Pressure drop heating coil - delivery head charging pump

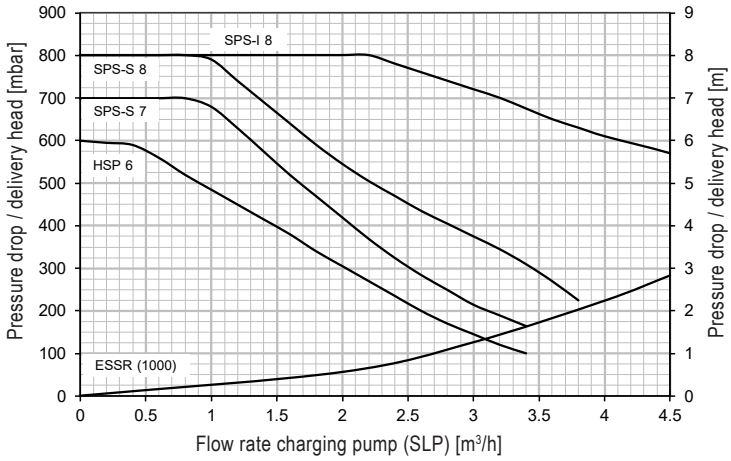

Hot water 60 °C

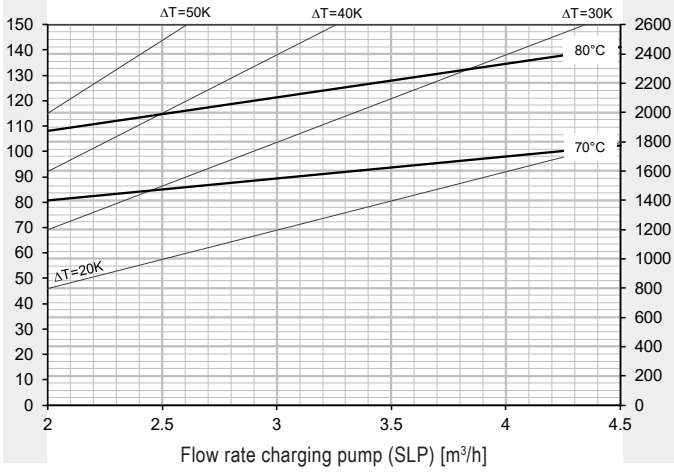

* Calorifier heated to 60 °C

CombiVal ESSR (500)
(Dimensions in mm)

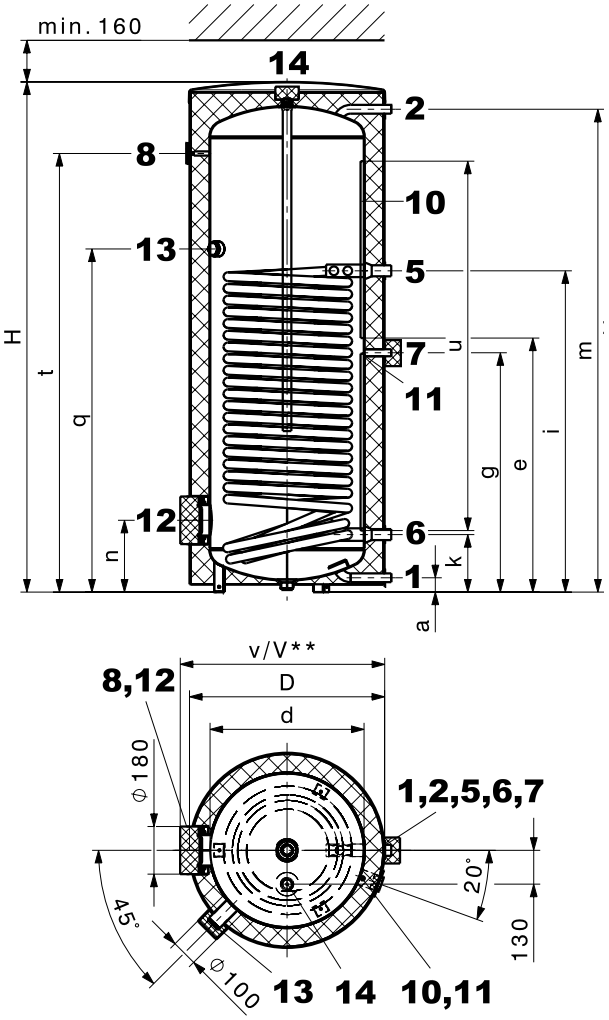

CombiVal ESSR (800,1000)

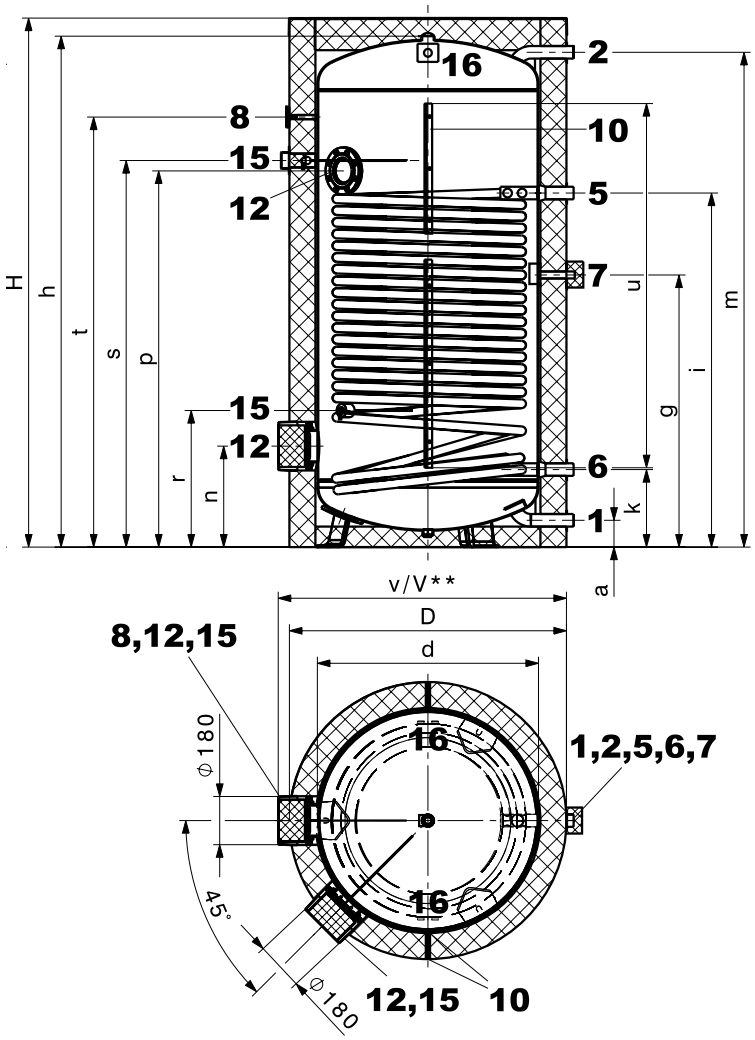

1	Cold water	type (500)	G 1″	(ET)
		type (800,1000)	G 1½″	(ET)
2	Domestic hot water	type (500)	G 1″	(ET)
		type (800,1000)	G 1½″	(ET)
5	Heating flow	type (500)	G 1¼″	(ET)
		type (800,1000)	G 1½″	(ET)
6	Heating return	type (500)	G 1¼″	(ET)
		type (800,1000)	G 1½″	(ET)
7	Circulation (removable insulated cap Ø 100 mm)		G ¾″	(ET)
8	Thermometer			

10	Sensor channel, inner Ø 11 mm Sensor terminal strip (zip fastener)	type (500) type (800,1000)	
11	Removable cap (Ø 60 mm) for positioning the sensor in the sensor channel	type (500)	
12	Hand-hole flange (flange-mounted electric heating element) Ø 180/120 mm, pitch circle 150 mm, 8 x M10		
13	Connection for screw-in electric heating element (cap Ø 100 mm)	type (500)	Rp 1½″ (IT)
14	Anode sleeve Screw connection uninsulated	type (500)	Rp 1¼″ (IT)
15	Correx® impressed current anode sleeve	type (800,1000)	Rp ¾″ (IT)
16	Transport strap	type (800,1000)	

Variation because of the production tolerance possible
Dimension +/- 10 mm

CombiVal ESSR

type	D	d	H	h	a	e	g	i	k	m	n	p	r	q	s	t	u	v	V**	Tilting dimension
(500)	750	597	1953	-	55	977	920	1235	221	1856	276	-	-	1319	-	1686	1360	795	810	2093
(800)	950	750	2033	1937	104	-	995	1265	292	1890	382	1413	520	-	1497	1647	1400	975	1020	1962
(1000)	1050	850	2063	1963	103	-	1046	1361	298	1902	388	1446	525	-	1486	1653	1400	1075	1120	1991

** when using a flange-mounted electric heating element

Hoval calorifier
MultiVal ERR (300-500)

- Calorifier made of steel enamelled inside
- 2 smooth pipe heat exchangers enamelled, built in
  - for alternative use at the bottom
  - for additional heating with an oil, gas or wood boiler at the top
- Magnesium protection anode built in
- Flange for electric heating element
- Thermal insulation made of polyurethane hard foam hulls, foamed on the calorifier
- Dismantable foil casing, red coloured
- Sensor channel
- Immersion sleeve welded in
- Including thermometer
- 1½″ sleeve for a screw-in electric heating element

Delivery
- Calorifier with foil casing installed

On request
- Screw-in electric heating element
- Flange-mounted electric heating element

Range

MultiVal type		
ERR	(300)	B
ERR	(400)	B
ERR	(500)	B

Calorifier

MultiVal ERR (300-500)

Made of steel enamelled inside,
with 2 heat exchangers. Calorifier fully cased.

MultiVal ERR type		Volume dm³	Heating surface top m²	Heating surface bottom m²	Part No.
(300)	B	295	0.80	1.55	7015 971
(400)	B	381	1.00	2.15	7016 752
(500)	B	471	1.30	2.15	7016 753

Electric heating elements
see chapter “Electric heating elements”

Accessories

Flange cover 180 - ¾″ — 2077 035
for the installation of the Correx®
impressed current anode in flange
Ø 180/110 mm,
enamelled on the inside with Rp ¾″
sleeve
Seal included

Flange with immersion sleeve for temperature sensor made of steel on DHW side, enamelled inside. — 6028 468
Flange dimensions:
- Outer Ø 180 mm,
- Pitch circle Ø 150 mm, 8 x M10
Immersion sleeve dimensions:
- Installation length = 120 mm,
- Outer Ø: 24 mm, inner Ø: 20 mm

Kit Correx® impressed current anode UP2.3-919-L395/1 — 684 760
for long-term corrosion protection for
installation in the enamelled calorifier
with reduction R 1¼″ (ET) – Rp 1″ (IT)
and R 1″ (ET) – Rp ¾″ (IT)
Installation length: 395 mm
Connection cable length: 1 x 2000 mm
1 Correx® impressed current anode

In every case, **either** a Correx® impressed current anode **or** one/two magnesium anodes are allowed to be used.

		Part No.
	**Immersion sensor TF/2P/5/6T, L = 5.0 m with plug** for TopTronic® E controller modules/ module expansions with exception of basic module district heating/fresh water or basic module district heating com cable length: 5 m with plug sensor sleeve diameter: 6 x 50 mm dewpoint-proof operating temperature: -20…105 °C protection class: IP67	2056 788
	**Immersion sensor TF/2P/5/6T, L = 5.0 m** for TopTronic® E controller modules/ module expansions with exception of basic module district heating/fresh water or basic module district heating com, cable length: 5 m without plug sensor sleeve diameter: 6 x 50 mm, dewpoint-proof, operating temperature: -20…105 °C, protection class: IP67	2055 888
	**Immersion sensor TF/12N/2.5/6T, L = 2.5 m** for gas boiler with RS-OT Cable length: 2.5 m Sensor sleeve diameter: 6 x 50 mm, dewpoint-proof, operating temperature: -20…105 °C, protection class: IP67	2056 791
At TopTronic® E, immersion sensor is included in the boiler controller or in the heating controller set.		
	**Calorifier thermostat control TW 12** Universal thermostat controller for thermostatic pump charge demand, setting in casing, visible from outside. 15-95 °C, switching difference 6 K, capillar length 700 mm incl. fastening material for Hoval calorifier, can be used with integrated immersion sleeve	6010 080
Thermal water mixer see “Various system components”		

Services

Commissioning
Commissioning by works service or Hoval trained authorised serviceman/company is condition for warranty.

For commissioning and other services please contact your Hoval sales office.

MultiVal ERR (300-500)

Type		(300)	(400)	(500)
• Volume	dm^3	295	381	471
• Volume (upper battery)	dm^3	110	126	181
• Operating pressure/test pressure	bar	10/13	10/13	10/13
• Max. operating temperature	°C	95	95	95
• Expanded PU hard foam thermal insulation	mm	75	75	75
• Thermal insulation λ	W/mK	0.027	0.027	0.027
• Thermal insulation polyester fleece	mm	-	-	-
• Fire protection class		B2	B2	B2
• Heat loss at 65 °C	W	61	69	78
• Transport weight	kg	128	149	170
• U value	W/m^2K	0.307	0.326	0.316
Heating battery bottom				
• Heating surface	m²	1.55	2.15	2.15
• Heating water	litres	10.3	15.1	15.1
• Flow resistance[1] water	z value	10	3.6	3.6
• Flow resistance[1] water/glycol 50 %	z value	13	3.9	3.9
• Operating pressure/test pressure	bar	10/13	10/13	10/13
• Max. operating temperature	°C	110	110	110
• For flat collectors up to [2]	m^2	8	10	11
Heating battery top				
• Heating surface	m²	0.80	1.00	1.30
• Heating water	litres	5.7	6.95	8.9
• Flow resistance [1]	z value	6	8	9
• Operating pressure/test pressure	bar	10/13	10/13	10/13
• Max. operating temperature	°C	110	110	110
• Dimensions		see table of dimensions		

[1] Flow resistance heating battery in mbar = flow rate (m³/h)² x z (1 mbar = 0.1 kPa)

[2] Collector surface, related to the heat exchanger heating surface only

Performance figure

Selection of the calorifier type
at a hot water temperature of 45 °C

Reading example
see engineering

	Comfort [1]			Standard [2]		
T >	60 °C	70 °C	80 °C	60 °C	70 °C	80 °C
NL v						
1	300/400			300/400		
2	500	300	300	500	300	300
3		400	400		400	400
4		500	500		500	500
5						
6						
7						
8						
9						
10						
11						
12						
13						
14						
15						
16						
17						
18						
19						
20						
21						
22						
23						
24						
25						
26						
27						
28						
29						
30						
31						
32						
33						
34						
35						
36						
37						
38						
39						
40						
41						
42						
43						
44						
45						
46						
47						
48						
49						
50						

	Comfort [1]			Standard [2]		
T >	60 °C	70 °C	80 °C	60 °C	70 °C	80 °C
NL v						
51						
52						
53						
54						
55						
56						
57						
58						
59						
60						
61						
62						
63						
64						
65						
66						
67						
68						
69						
70						
71						
72						
73						
74						
75						
76						
77						
78						
79						
80						
81						
82						
83						
84						
85						
86						
87						
88						
89						
90						
91						
92						
93						
94						
95						
96						
97						
98						
99						
100						

T = heating flow
NL = performance figure
Performance figure NL acc. to DIN 4708 = number of flats which can be supplied with domestic hot water when the calorifier is heated and permanently reheated with the heat generator (standard flat: 1 bathroom - 4 rooms - 3.5 persons)
[1] Calculation with simultaneity factor according to DIN 4708 (preferred for Switzerland)
[2] Calculation with simultaneity factor according to Dresden Technical University

10 min peak output/N number with domestic hot water 45 °C
according to DIN 4708 (Comfort) and Dresden Technical University (Standard)

Reading example
see Engineering

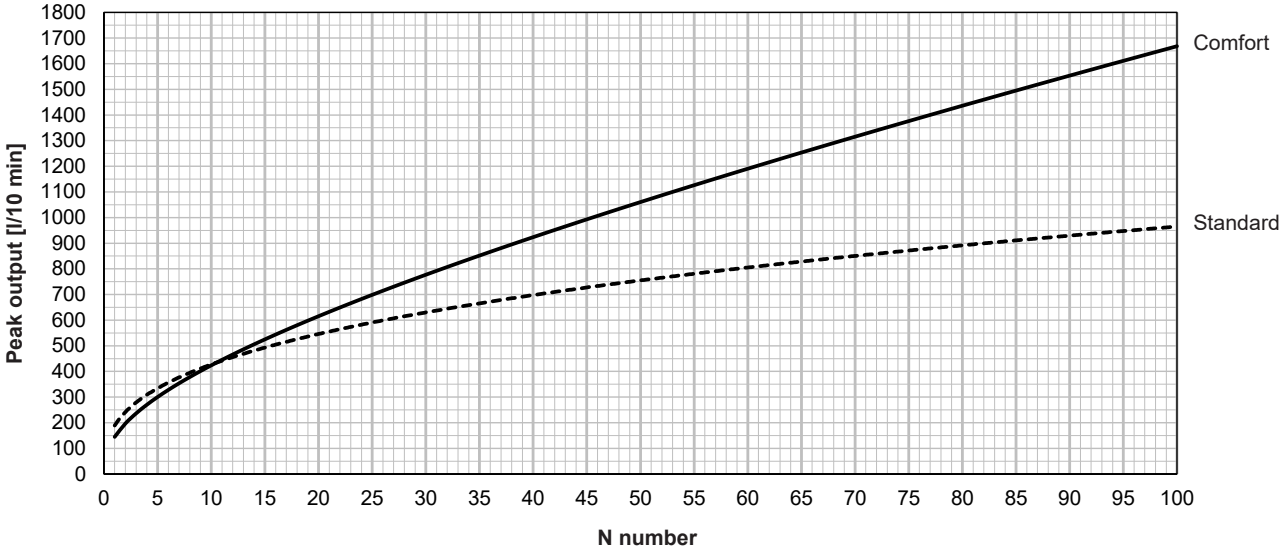

MultiVal ERR (300)

Hot water output
Continuous output

Reading example
see engineering

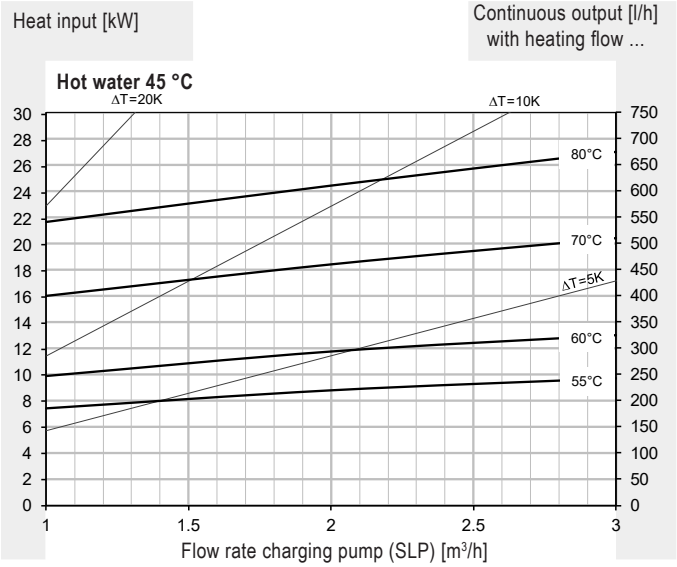

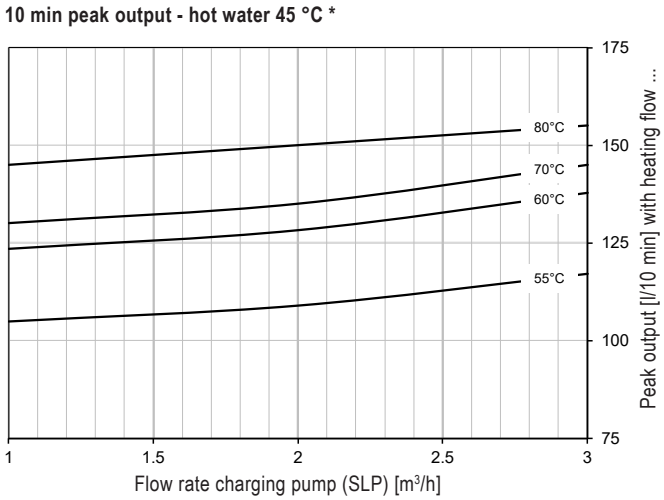

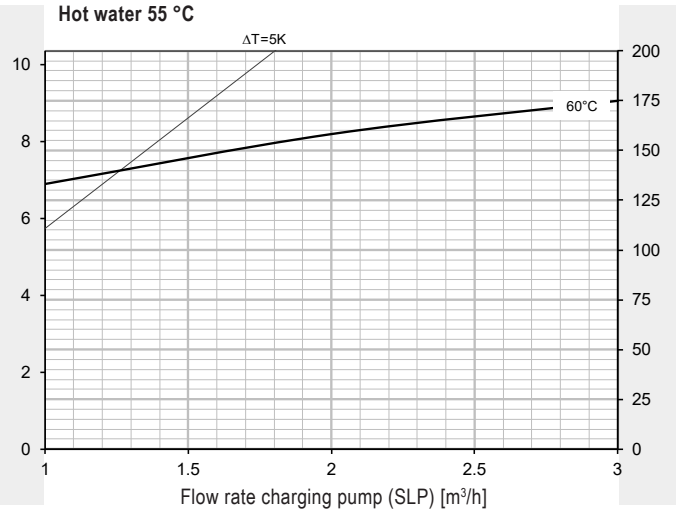

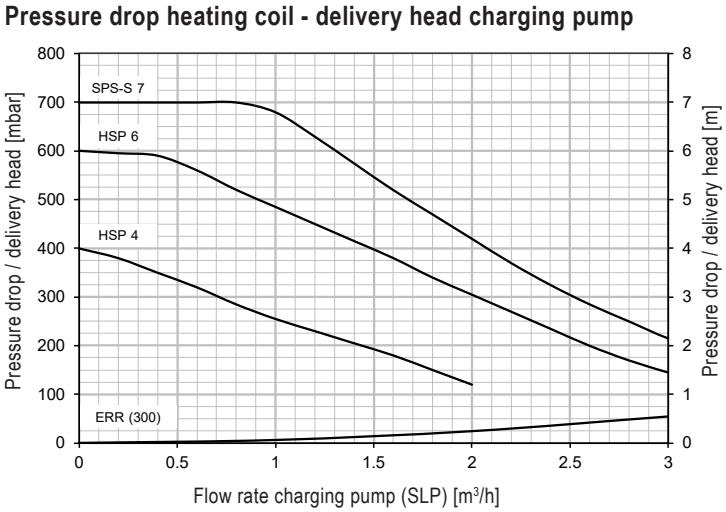

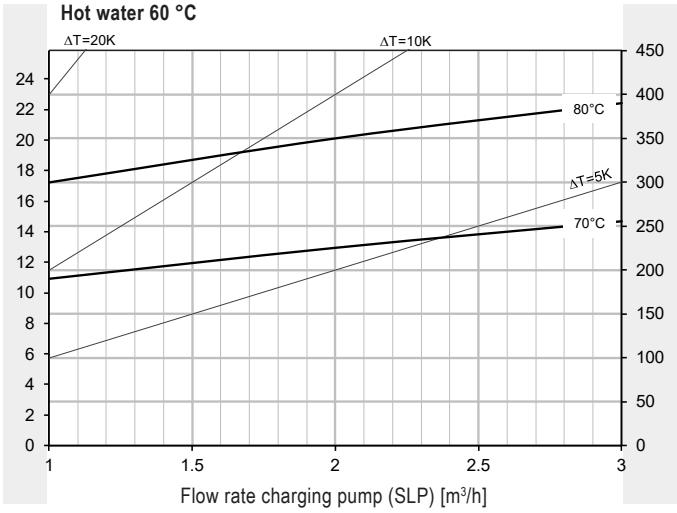

* Calorifier heated to 60 °C

MultiVal ERR (400)

Hot water output
Continuous output

Reading example
see engineering

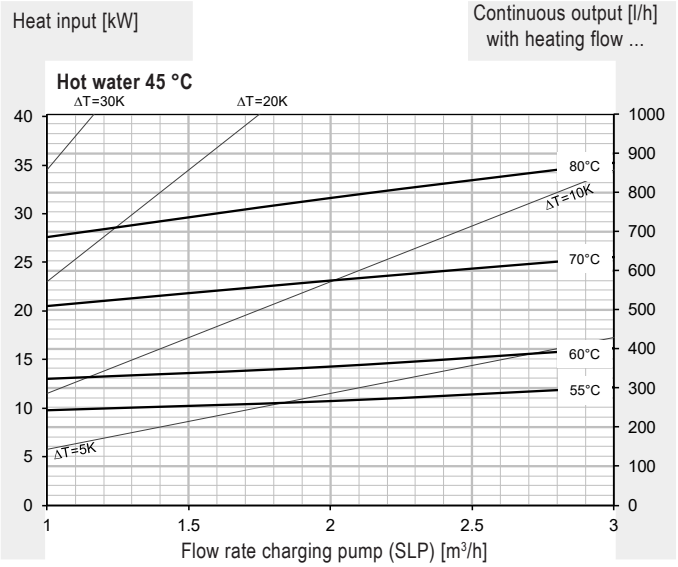

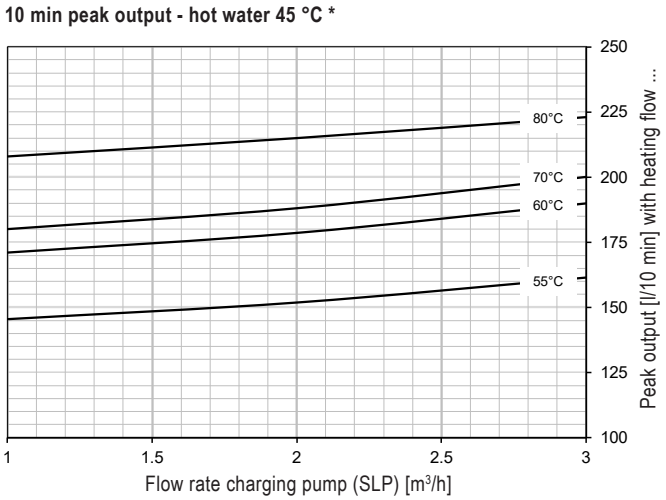

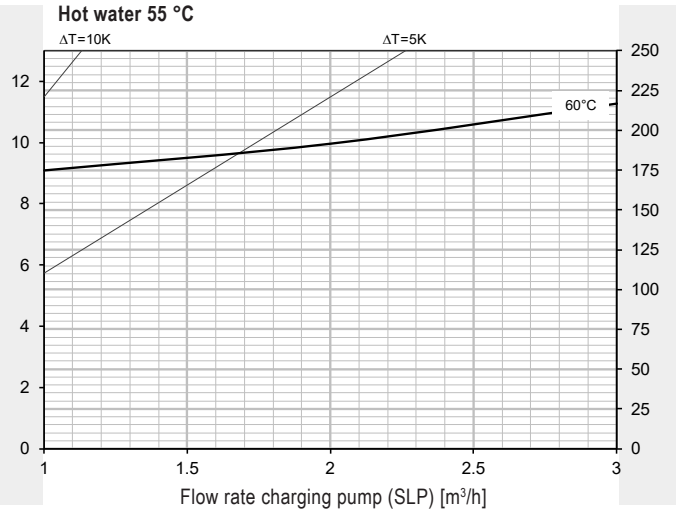

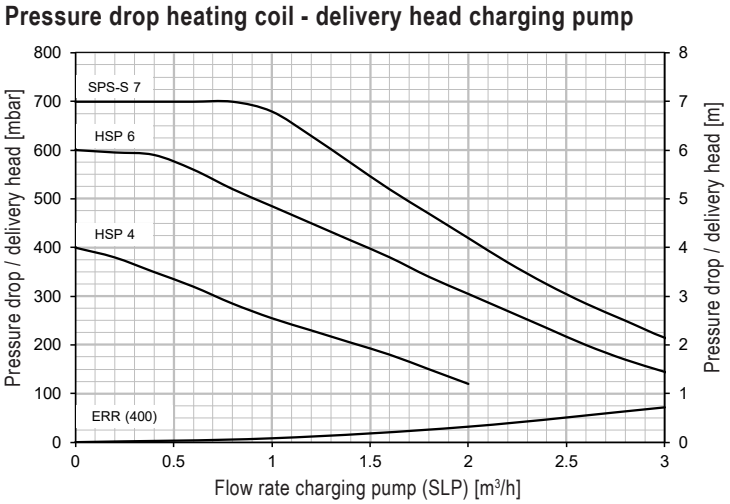

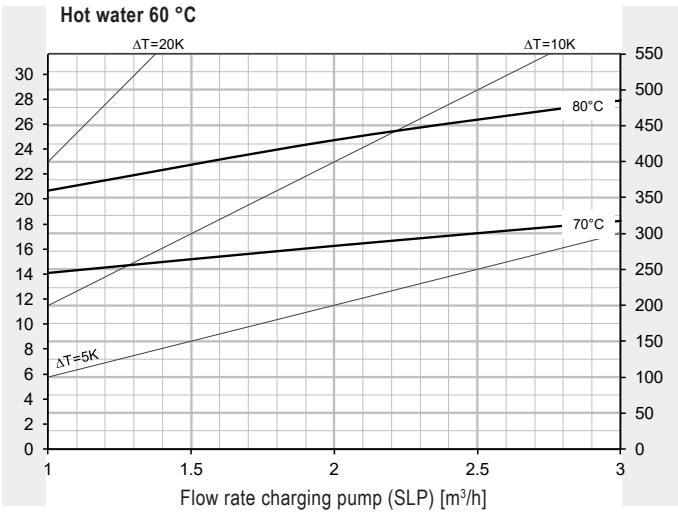

* Calorifier heated to 60 °C

MultiVal ERR (500)

Hot water output
Continuous output

Reading example
see engineering

Heat input [kW]

Continuous output [l/h] with heating flow ...

Hot water 45 °C

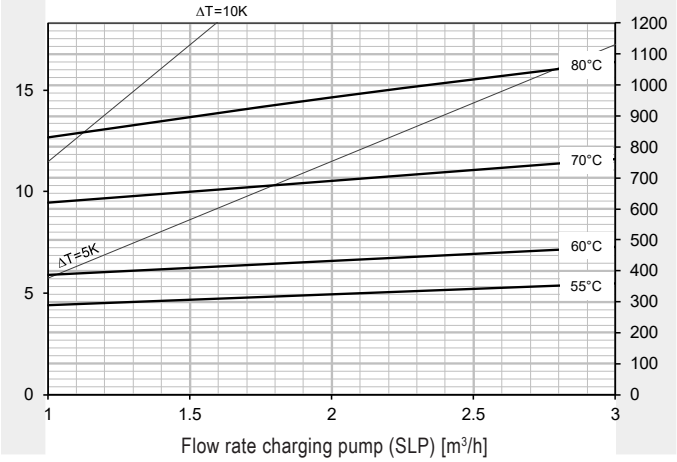

10 min peak output - hot water 45 °C *

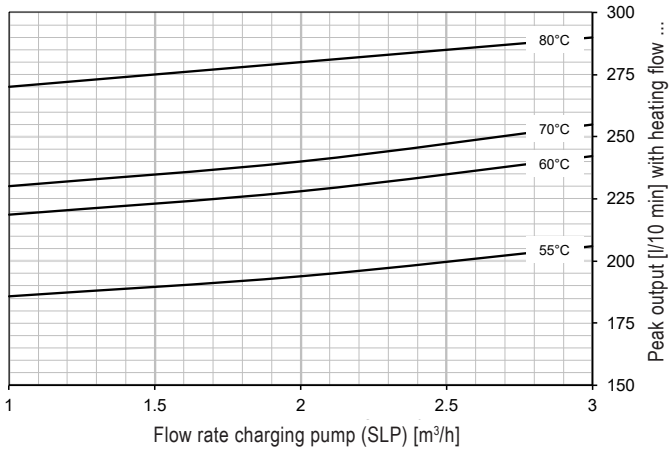

Hot water 55 °C

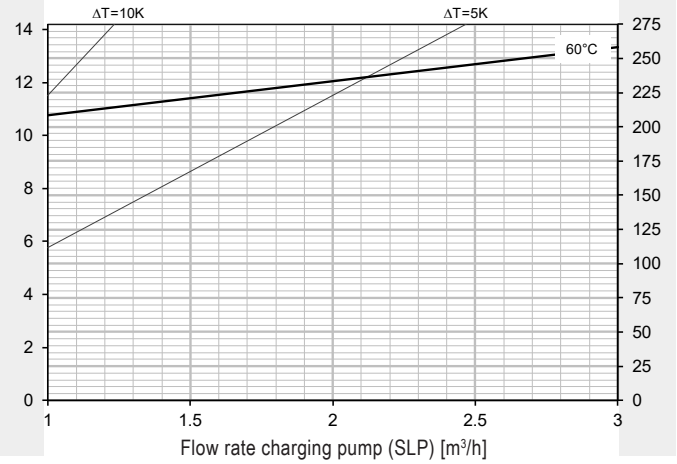

Pressure drop heating coil - delivery head charging pump

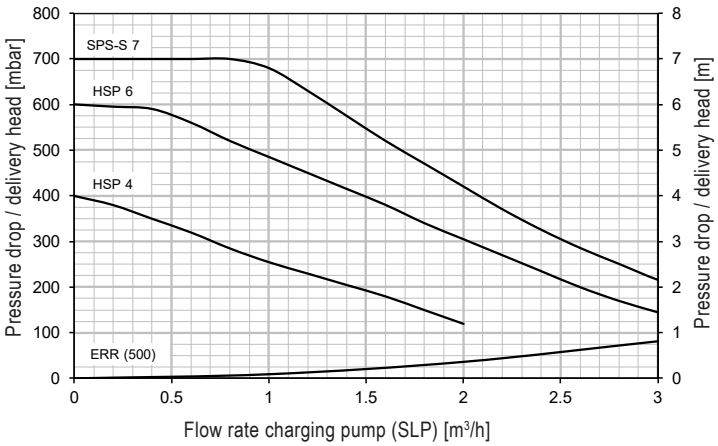

Hot water 60 °C

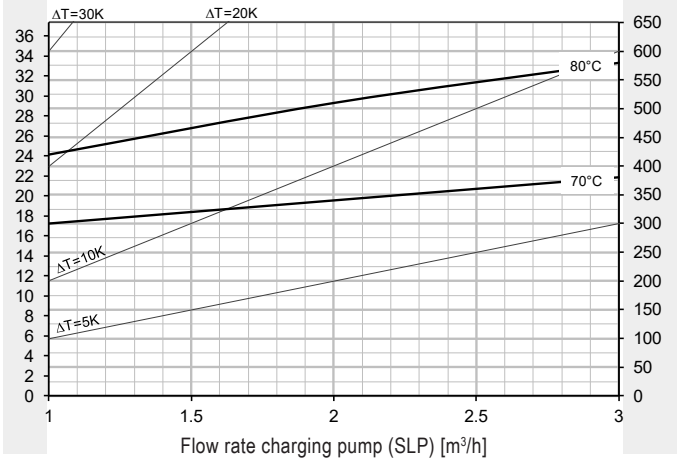

* Calorifier heated to 60 °C

MultiVal ERR (300)

(Dimensions in mm)

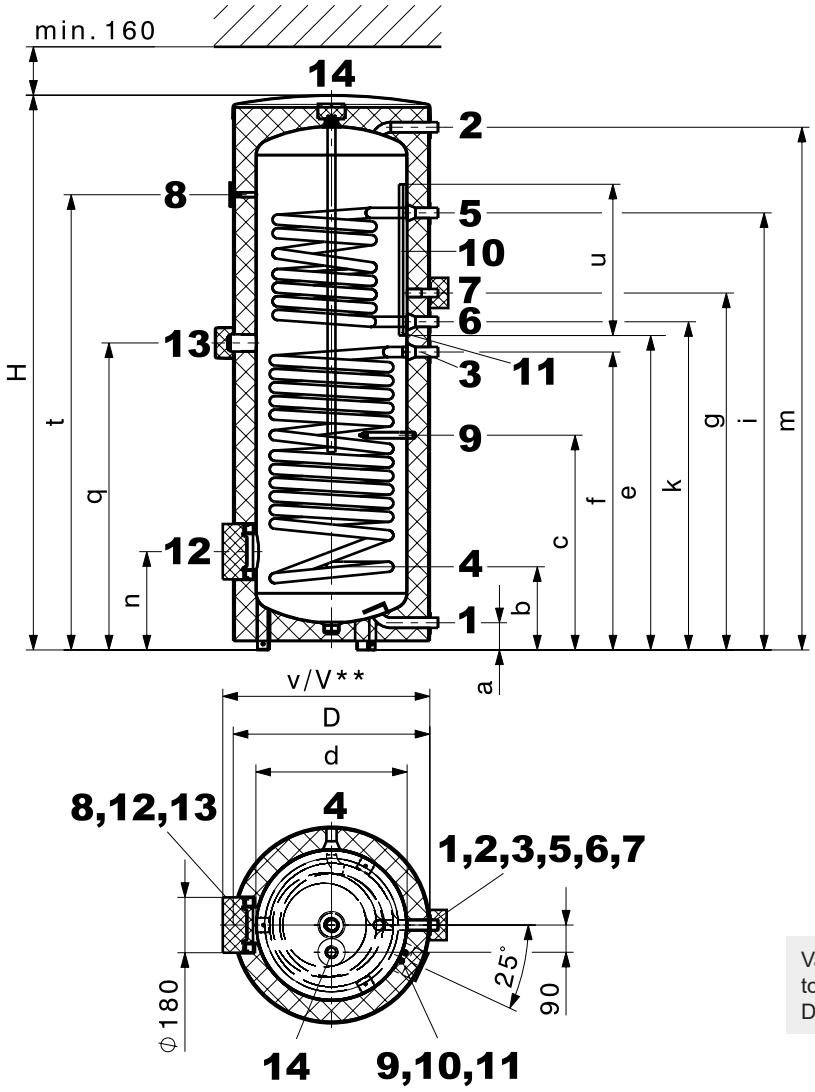

Variation because of the production tolerance possible
Dimension +/- 10 mm

1	Cold water	G 1″ (ET)
2	Domestic hot water	G 1″ (ET)
3	Solar circuit flow	G 1″ (ET)
4	Solar circuit return	G 1″ (ET)
5	Flow supplemental heating	G 1″ (ET)
6	Return supplemental heating	G 1″ (ET)
7	Circulation (removable insulated cap Ø 100 mm)	G ¾″ (ET)
8	Thermometer	
9	Connection for sensor/thermostat, inner Ø 16 mm (turned through 25° in section)	
10	2 sensor channels inner Ø 11 mm	
11	Removable cap (Ø 100 mm) for positioning the sensor in the sensor channel	
12	Hand-hole flange (flange-mounted electric heating element) Ø 180/120 mm, pitch circle 150 mm, 8 x M10	
13	Connection for screw-in electric heating element (cap Ø 100 mm)	Rp 1½″ (IT)
14	Anode sleeve Screw connection uninsulated	Rp 1″ (IT)

MultiVal ERR type	D	d	H	a	b	c	e	f	g	i	k	m	n	q	t	u	v	V**	Tilting dimension
(300)	650	500	1835	90	275	710	1040	985	1180	1445	1085	1728	325	1015	1505	500	695	710	2093

** when using a flange-mounted electric heating element

MultiVal ERR (400,500)

(Dimensions in mm)

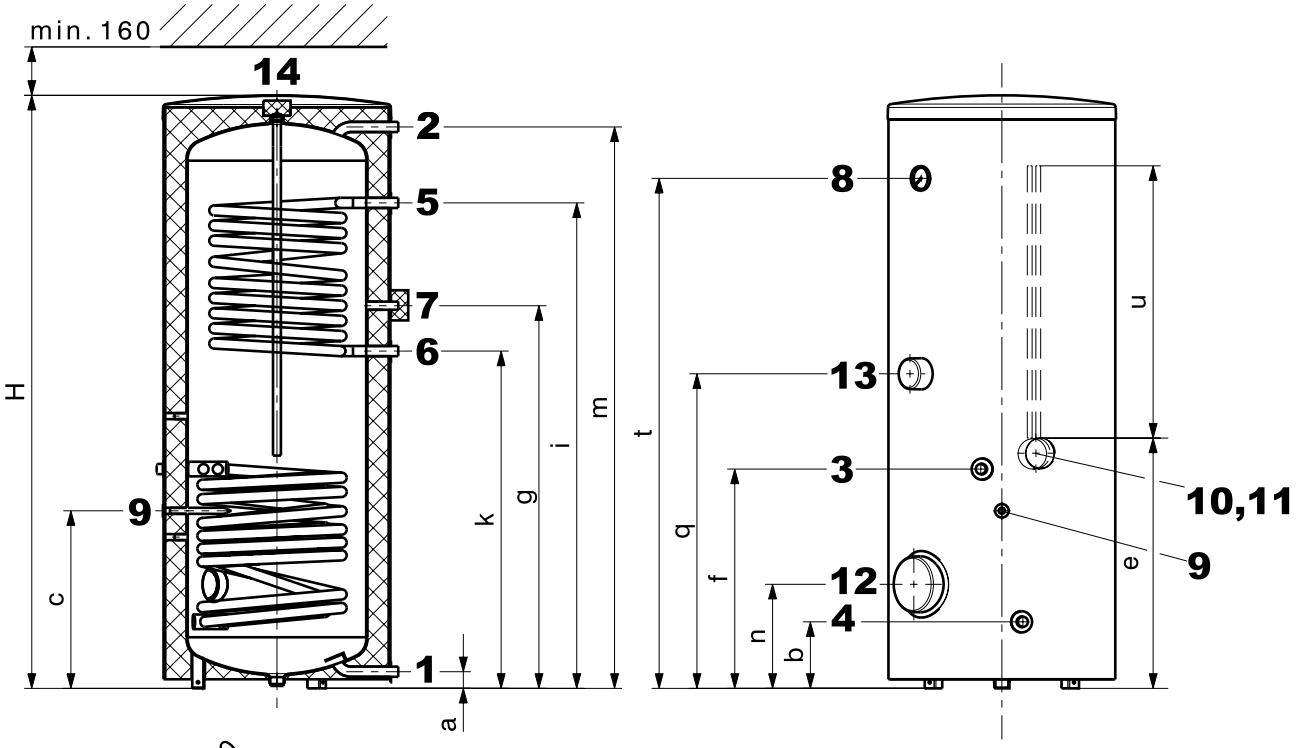

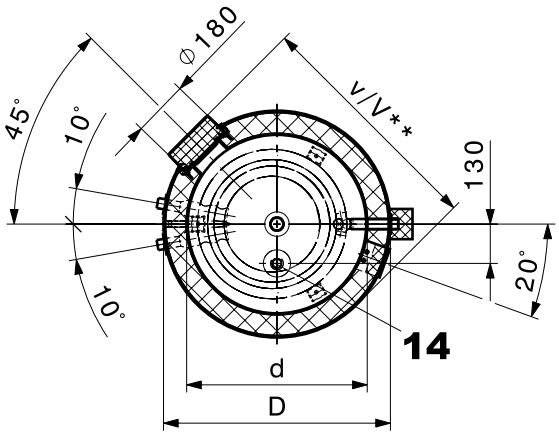

Variation because of the production tolerance possible
Dimension +/- 10 mm

1	Cold water	G 1″ (ET)
2	Domestic hot water	G 1″ (ET)
3	Solar circuit flow	G 1″ (ET)
4	Solar circuit return	G 1″ (ET)
5	Flow supplemental heating	G 1″ (ET)
6	Return supplemental heating	G 1″ (ET)
7	Circulation (removable insulated cap Ø 100 mm)	G ¾″ (ET)
8	Thermometer	
9	Connection for sensor/thermostat, inner Ø 16 mm	
10	2 sensor channels inner Ø 11 mm	
11	Removable cap (Ø 100 mm) for positioning the sensor in the sensor channel	
12	Hand-hole flange (flange-mounted electric heating element) Ø 180/120 mm, pitch circle 150 mm, 8 x M10	
13	Connection for screw-in electric heating element (cap Ø 100 mm)	Rp 1½″ (IT)
14	Anode sleeve Screw connection uninsulated	Rp 1″ (IT)

MultiVal ERR type	D	d	H	a	b	c	e	f	g	i	k	m	n	q	t	u	v	V**	Tilting dimension
(400)	750	597	1624	55	220	587	862	725	1112	1355	1007	1526	344	958	1356	500	791	831	1731
(500)	750	597	1951	55	220	587	820	725	1265	1605	1115	1856	344	1040	1686	900	791	831	2029

** when using a flange-mounted electric heating element

Hoval calorifier MultiVal ESRR (500)

- Calorifier made of steel enamelled inside
- 2 smooth pipe heat exchangers enamelled, built in
  - at the bottom: for solar use
  - for heating with heat pumps
- Magnesium protection anode or impressed current anode built in
- Flange for electric heating element
- Thermal insulation made of polyurethane hard foam hulls, foamed on the calorifier, dismantable foil casing, colour red
- Sensor channel
- Immersion sleeve welded in
- With thermometer
- 1½″ sleeve for a screw-in electric heating element

Delivery
- Calorifier fully cased

On request
- Flange-mounted electric heating element

Hoval calorifier MultiVal ESRR (800-1000)

- Calorifier made of steel enamelled inside
- 2 smooth pipe heat exchangers enamelled, built in
  - at the bottom: for solar use
  - for heating with heat pumps
- Correx® potentiostat included
- 2 impressed current anodes incl. connecting cable integrated
- Flange below as cleaning flange or for the installation of a flange-mounted electric heating element or blank flange with immersion sleeve
- Flange above as additional cleaning flange or for the installation of a flange-mounted electric heating element
- Thermal insulation made of polyester fleece with foil jacket, colour red
- Two terminal bars for contact sensor
- With thermometer

Delivery
- Calorifier and thermal insulation completely installed (can be removed for installation)

On request
- Flange-mounted electric heating element

Range

MultiVal type		
ESRR	(500)	B
ESRR	(800)	
ESRR	(1000)	

Calorifier

MultiVal ESRR (500-1000)

Made of steel enamelled,
with 2 heat exchangers
MultiVal ESRR (500) fully cased.
MultiVal ESRR (800,1000) calorifier and thermal insulation delivered separately packed.

MultiVal ESRR type		Volume dm³	Heating surface top m²	Heating surface bottom m²	Part No.
(500)	B	463	4.30	2.15	7016 754
(800)		731	5.20	2.60	7018 053
(1000)		958	6.10	3.40	7018 054

Electric heating elements
see chapter “Electric heating elements”

Accessories

Flange cover 180 - ¾″ — 2077 035
for the installation of the Correx®
impressed current anode in flange
Ø 180/110 mm,
enamelled on the inside with Rp ¾″
sleeve
Seal included

Flange with immersion sleeve for temperature sensor made of steel on DHW side, enamelled inside. — 6028 468
Flange dimensions:
- Outer Ø 180 mm,
- Pitch circle Ø 150 mm, 8 x M10
Immersion sleeve dimensions:
- Installation length = 120 mm,
- Outer Ø: 24 mm, inner Ø: 20 mm

Kit Correx® impressed current anode UP2.3-919-L395/1 — 684 760
for long-term corrosion protection for
installation in the enamelled calorifier
with reduction R 1¼″ (ET) – Rp 1″ (IT)
and R 1″ (ET) – Rp ¾″ (IT)
Installation length: 395 mm
Connection cable length: 1 x 2000 mm
1 Correx® impressed current anode

Included in the scope of delivery
of ESRR (800,1000)

In every case, **either** a Correx® impressed current anode **or** one/two magnesium anodes are allowed to be used.

		Part No.
	**Immersion sensor TF/2P/5/6T, L = 5.0 m with plug** for TopTronic® E controller modules/ module expansions with exception of basic module district heating/fresh water or basic module district heating com cable length: 5 m with plug sensor sleeve diameter: 6 x 50 mm dewpoint-proof operating temperature: -20…105 °C protection class: IP67	2056 788
	**Immersion sensor TF/2P/5/6T, L = 5.0 m** for TopTronic® E controller modules/ module expansions with exception of basic module district heating/fresh water or basic module district heating com, cable length: 5 m without plug sensor sleeve diameter: 6 x 50 mm, dewpoint-proof, operating temperature: -20…105 °C, protection class: IP67	2055 888
	**Immersion sensor TF/12N/2.5/6T, L = 2.5 m** for gas boiler with RS-OT Cable length: 2.5 m Sensor sleeve diameter: 6 x 50 mm, dewpoint-proof, operating temperature: -20…105 °C, protection class: IP67	2056 791
At TopTronic® E, immersion sensor is included in the boiler controller or in the heating controller set.		
	**Calorifier thermostat control TW 12** Universal thermostat controller for thermostatic pump charge demand, setting in casing, visible from outside. 15-95 °C, switching difference 6 K, capillar length 700 mm incl. fastening material for Hoval calorifier, can be used with integrated immersion sleeve	6010 080
Thermal water mixer see “Various system components”		

Services

Commissioning
Commissioning by works service or Hoval trained authorised serviceman/company is condition for warranty.

For commissioning and other services please contact your Hoval sales office.

MultiVal ESRR (500-1000)

Type		(500)	(800)	(1000)
• Volume	dm^3	463	731	958
• Volume (upper battery)	dm^3	235	444	535
• Operating pressure/test pressure	bar	10/13	10/13	10/13
• Max. operating temperature	°C	95	95	95
• Expanded PU hard foam thermal insulation	mm	75	-	-
• Thermal insulation λ	W/mK	0.027	0.04	0.04
• Polyester fibre fleece thermal insulation	mm	-	100	100
• Fire protection class		B2	B2	B2
• Heat loss at 65 °C	W	81	128	144
• Transport weight	kg	234	301	383
• U value	W/m^2K	0.333	0.38	0.375
Heating battery low (built in)		Plain tube heat exchanger for solar use		
• Heating surface	m^2	2.15	2.6	3.4
• Heating water content	dm^3	15.1	17.8	24.1
• Flow resistance[1] water	z value	3.6	4.5	7.5
• Flow resistance[1] water/glycol 50 %	z value	3.9	5.8	10
• Operating pressure/test pressure	bar	10/13	10/13	10/13
• Max. operating temperature	°C	110	110	110
• For flat collectors up to [2]	m^2	11	15	20
Heating battery up (built in)		Plain tube heat exchanger for heat pumps		
• Heating surface	m^2	4.3	5.2	6.1
• Heating water content	dm^3	30.1	36.1	42.6
• Flow resistance [1]	z value	8	8	10
• Operating pressure/test pressure	bar	10/13	10/13	10/13
• Max. operating temperature	°C	110	110	110
• Dimensions		see table of dimensions		

[1] Flow resistance heating battery in mbar = flow rate $(m^3/h)^2$ x z (1 mbar = 0.1 kPa)

[2] Collector surface, related to the heat exchanger heating surface only

Performance figure

Selection of the calorifier type
at a hot water temperature of 45 °C

Reading example
see engineering

	Comfort [1]			Standard [2]		
T >	60 °C	70 °C	80 °C	60 °C	70 °C	80 °C
NL ˅						
1						
2						
3						
4						
5						
6						
7						
8						
9	500					
10				500		
11						
12	800					
13	1000					
14				800		
15				1000		
16						
17		500				
18						
19			500			
20						
21					500	
22						
23						500
24		800				
25						
26		1000				
27			800			
28						
29						
30					800	
31			1000			
32						
33					1000	
34						800
35						
36						
37						
38						
39						
40						1000
41						
42						
43						
44						
45						
46						
47						
48						
49						
50						

	Comfort [1]			Standard [2]		
T >	60 °C	70 °C	80 °C	60 °C	70 °C	80 °C
NL ˅						
51						
52						
53						
54						
55						
56						
57						
58						
59						
60						
61						
62						
63						
64						
65						
66						
67						
68						
69						
70						
71						
72						
73						
74						
75						
76						
77						
78						
79						
80						
81						
82						
83						
84						
85						
86						
87						
88						
89						
90						
91						
92						
93						
94						
95						
96						
97						
98						
99						
100						

T = heating flow
NL = performance figure
Performance figure NL acc. to DIN 4708 = number of flats which can be supplied with domestic hot water when the calorifier is heated and permanently reheated with the heat generator (standard flat: 1 bathroom - 4 rooms - 3.5 persons)
[1] Calculation with simultaneity factor according to DIN 4708 (preferred for Switzerland)
[2] Calculation with simultaneity factor according to Dresden Technical University

10 min peak output/N number with domestic hot water 45 °C
according to DIN 4708 (Comfort) and Dresden Technical University (Standard)

Reading example
see Engineering

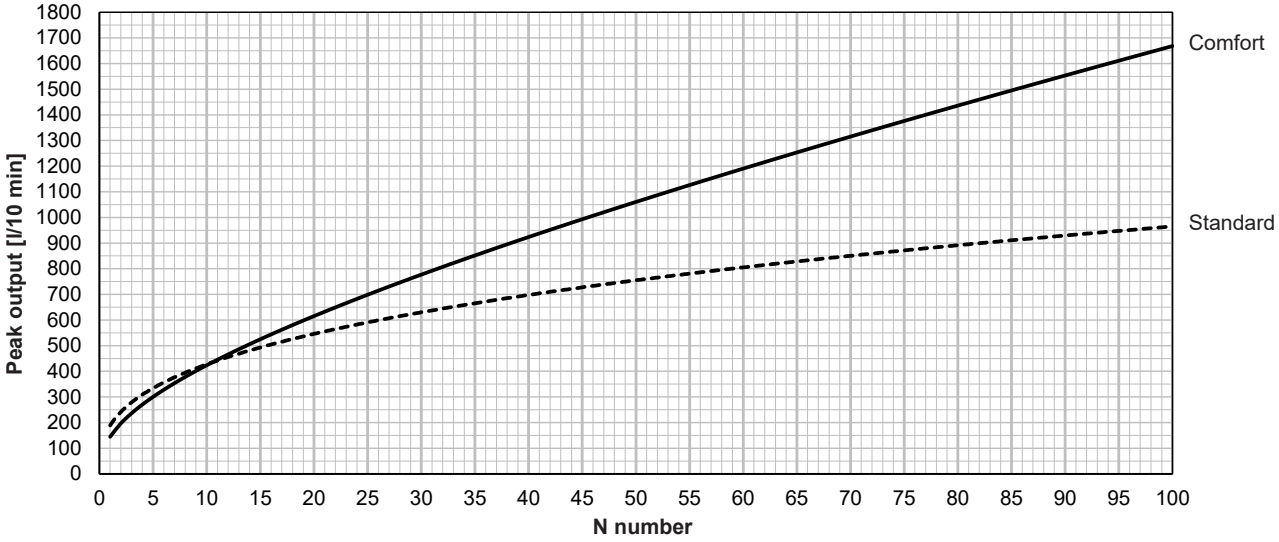

MultiVal ESRR (500)

Hot water output
Continuous output

Reading example
see engineering

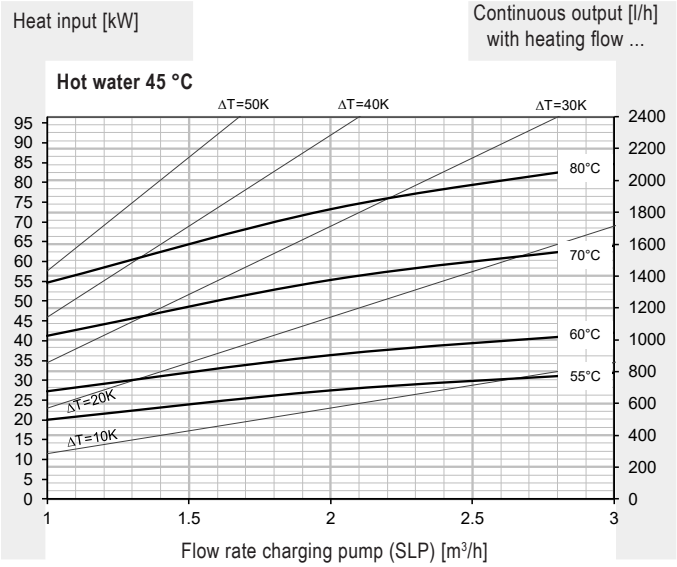

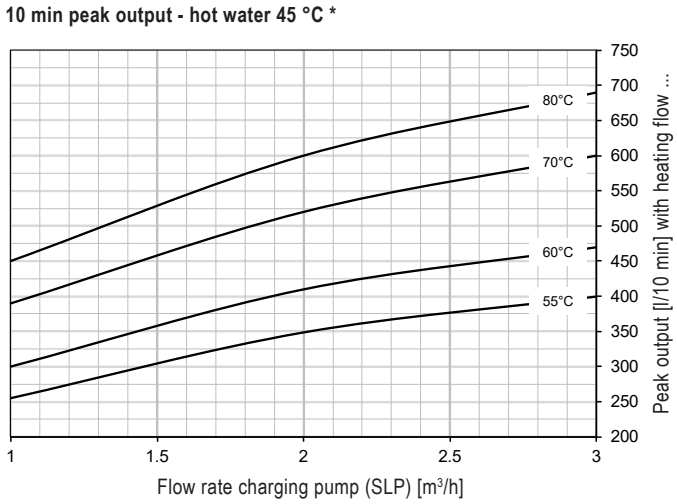

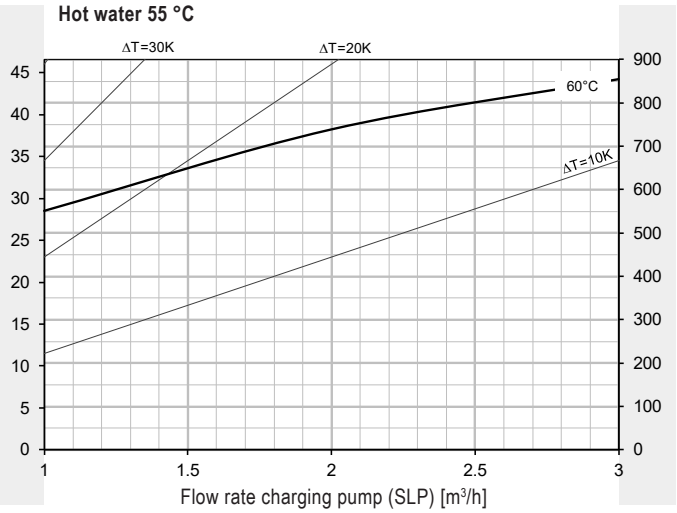

Pressure drop heating coil - delivery head charging pump

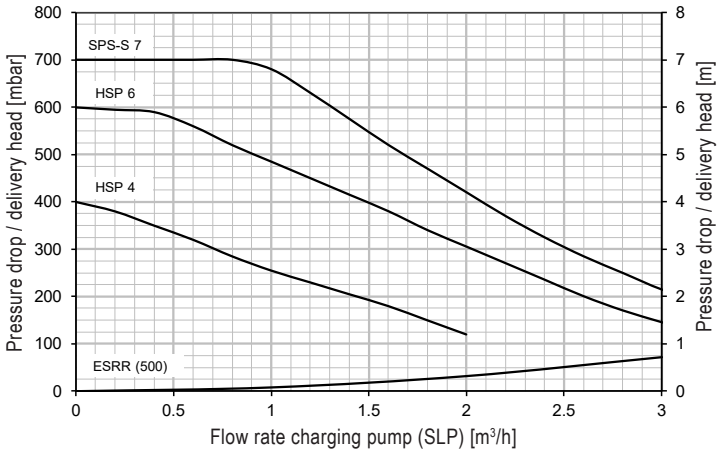

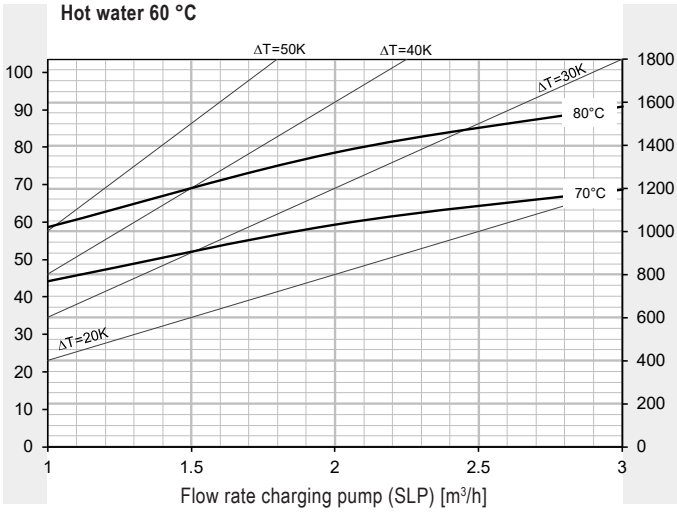

* Calorifier heated to 60 °C

MultiVal ESRR (800)

Hot water output
Continuous output

Reading example
see engineering

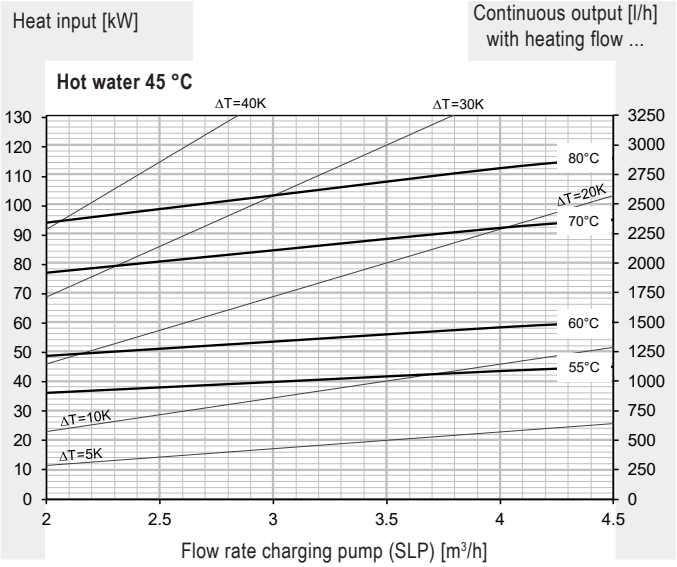

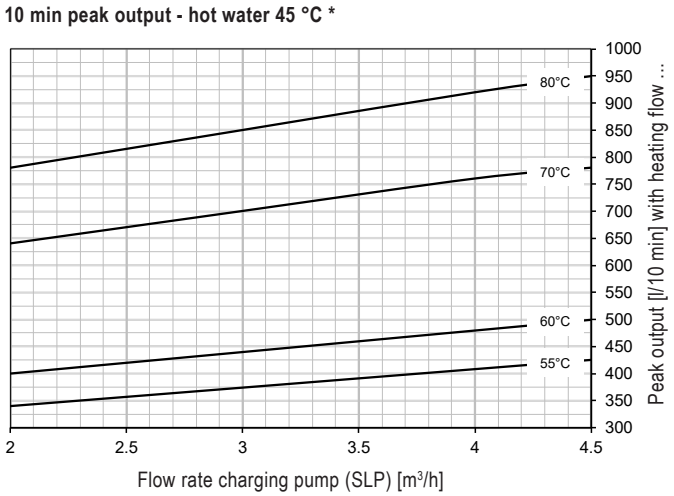

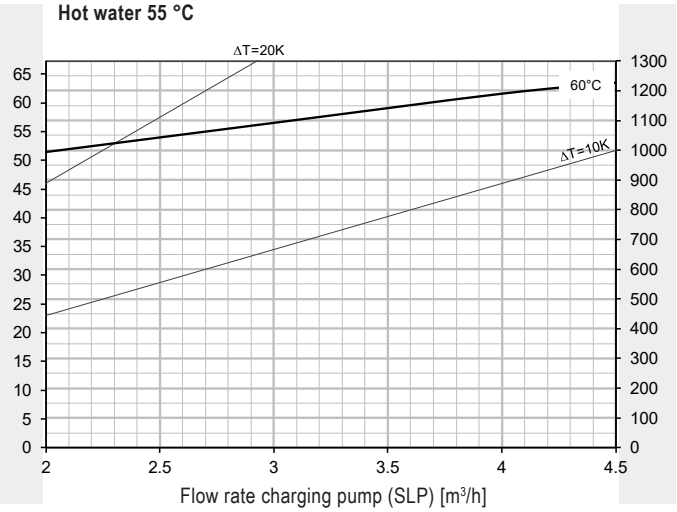

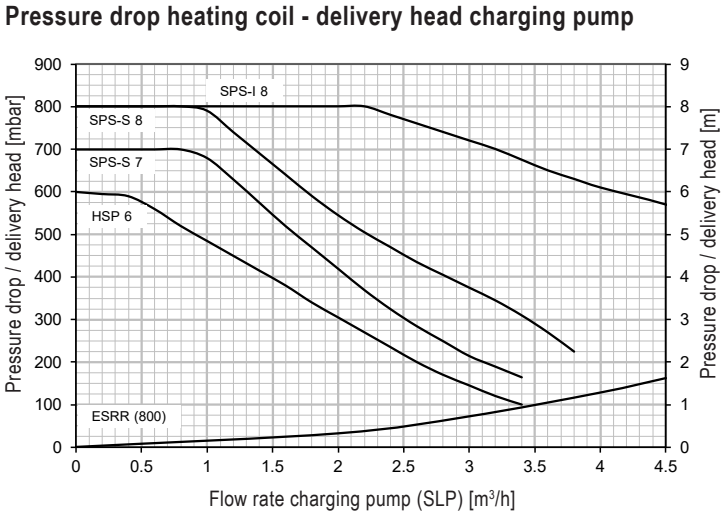

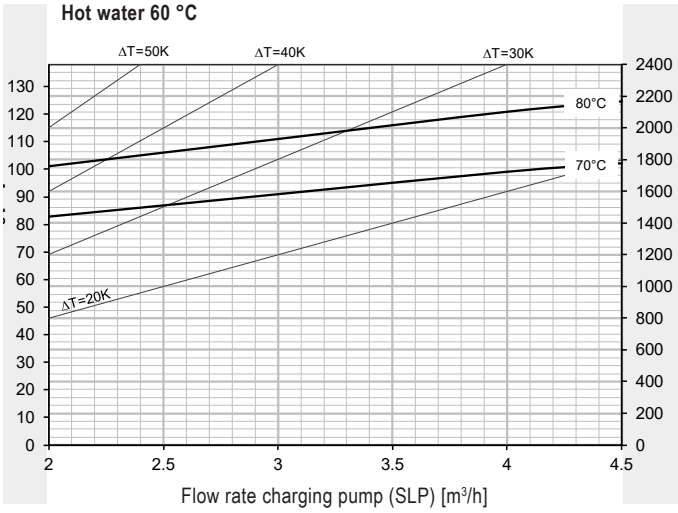

* Calorifier heated to 60 °C

MultiVal ESRR (1000)

Hot water output
Continuous output

Reading example
see engineering

Heat input [kW]

Continuous output [l/h] with heating flow ...

Hot water 45 °C

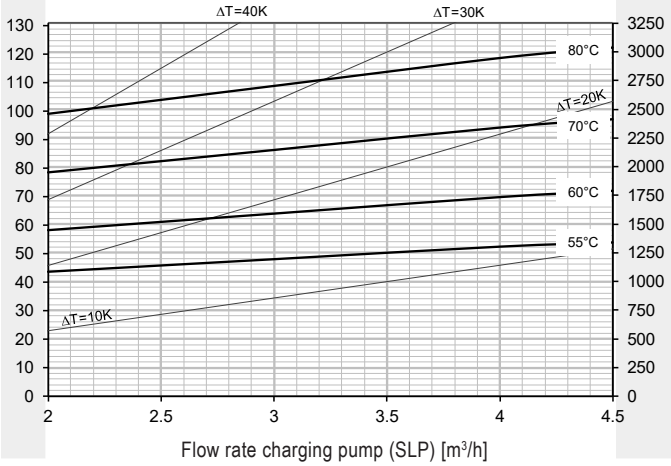

10 min peak output - hot water 45 °C *

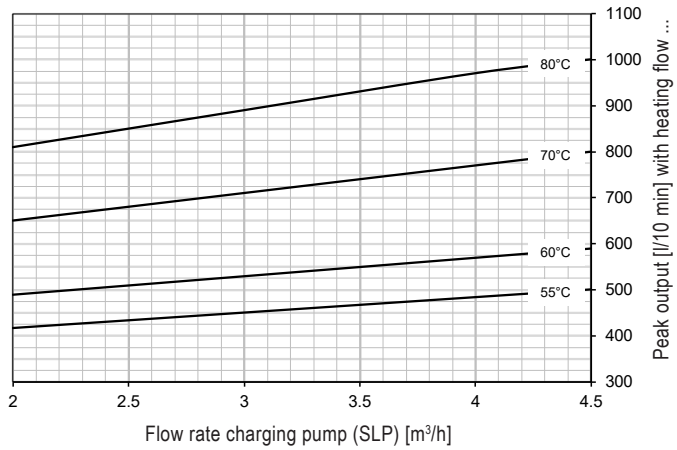

Hot water 55 °C

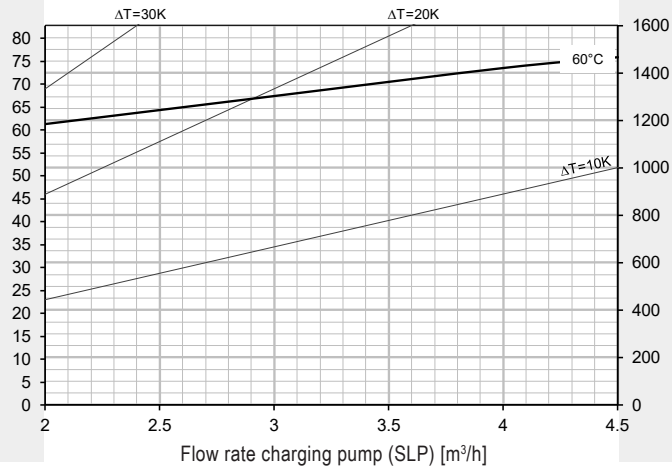

Pressure drop heating coil - delivery head charging pump

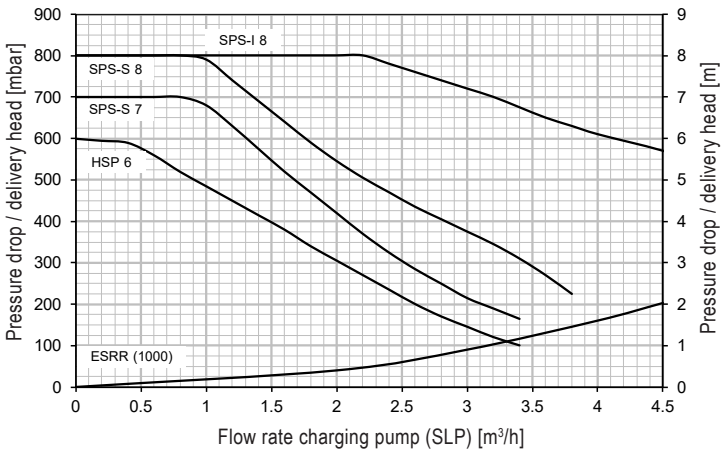

Hot water 60 °C

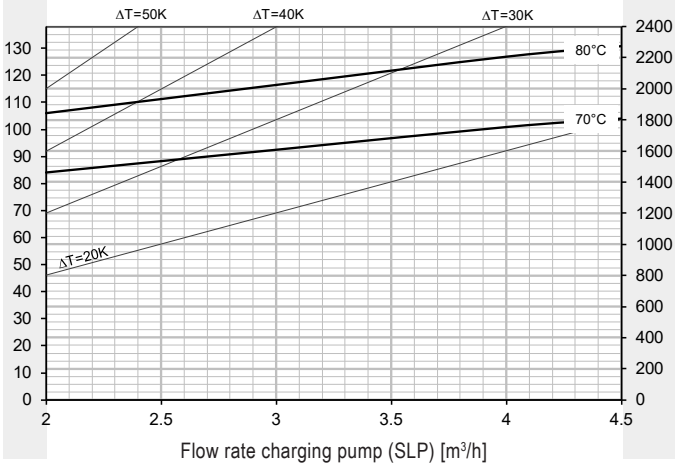

* Calorifier heated to 60 °C

MultiVal ESRR (500)

(Dimensions in mm)

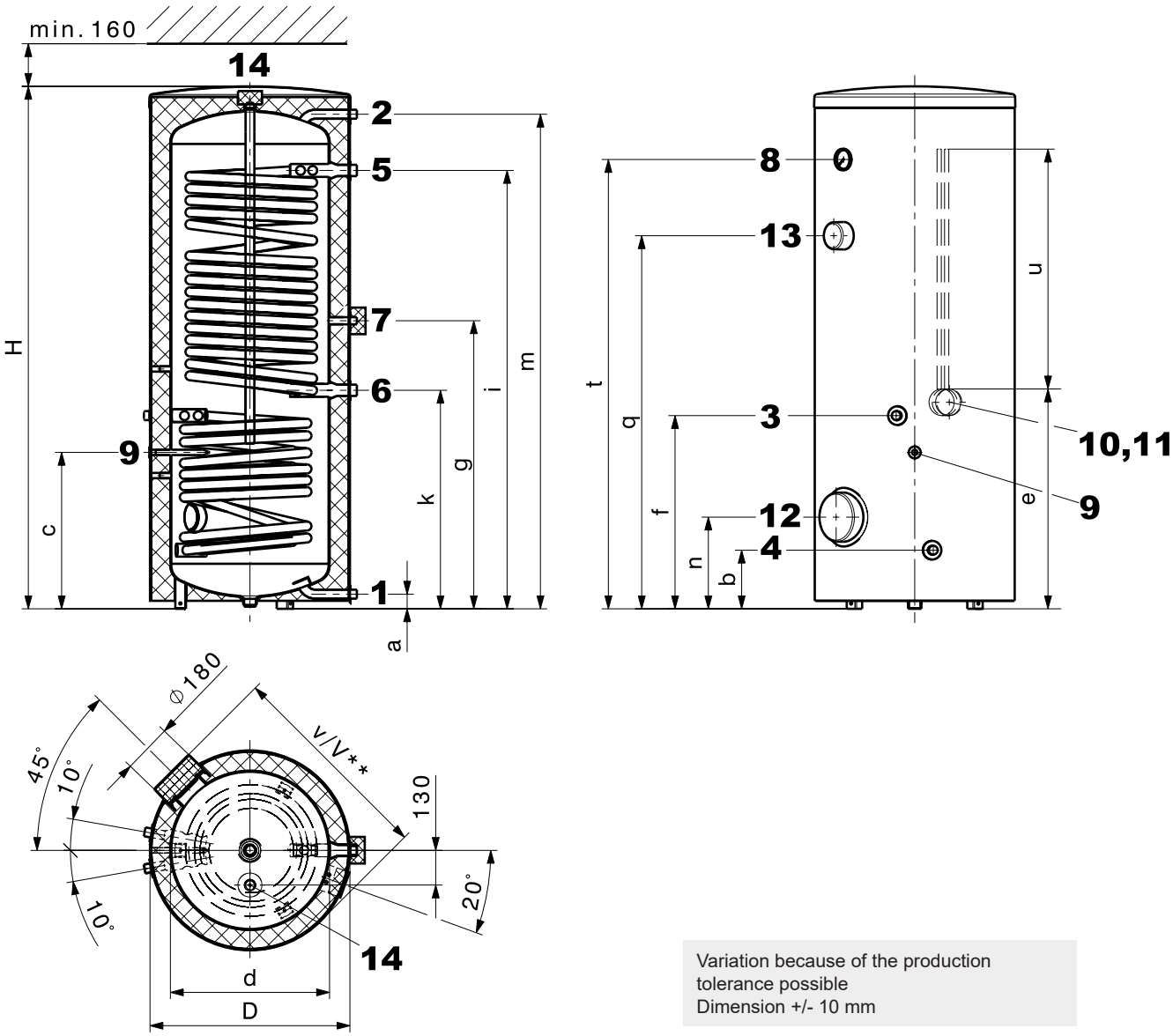

Variation because of the production tolerance possible
Dimension +/- 10 mm

1	Cold water	G 1″	(ET)	10	2 sensor channels inner Ø 11 mm	
2	Domestic hot water	G 1″	(ET)	11	Removable cap (Ø 100 mm) for positioning the sensor in the sensor channel	
3	Solar circuit flow	G 1″	(ET)			
4	Solar circuit return	G 1″	(ET)	12	Hand-hole flange (flange-mounted electric heating element) Ø 180/120 mm, pitch circle Ø 150 mm, 8 x M10	
5	Flow supplemental heating	G 1¼″	(ET)			
6	Return supplemental heating	G 1¼″	(ET)			
7	Circulation (removable insulated cap Ø 100 mm)	G ¾″	(ET)	13	Connection for screw-in electric heating element (cap Ø 100 mm)	Rp 1½″ (IT)
8	Thermometer			14	Anode sleeve Screw connection uninsulated	Rp 1¼″ (IT)
9	Connection for sensor/thermostat, inner Ø 16 mm	Rp 1½″ (ET)				

MultiVal ESRR type	D	d	H	a	b	c	e	f	g	i	k	m	n	q	t	u	v	V**	Tilting dimension
(500)	750	597	1951	55	220	587	820	725	1081	1645	820	1856	344	1400	1686	900	791	831	2029

** when using a flange-mounted electric heating element

MultiVal ESRR (800,1000)

(Dimensions in mm)

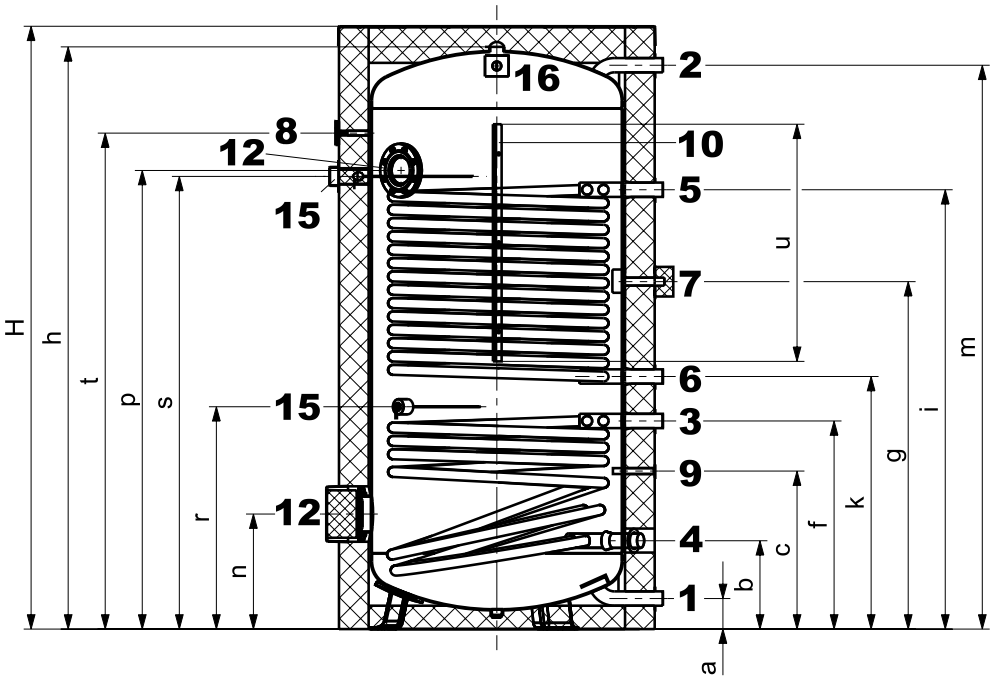

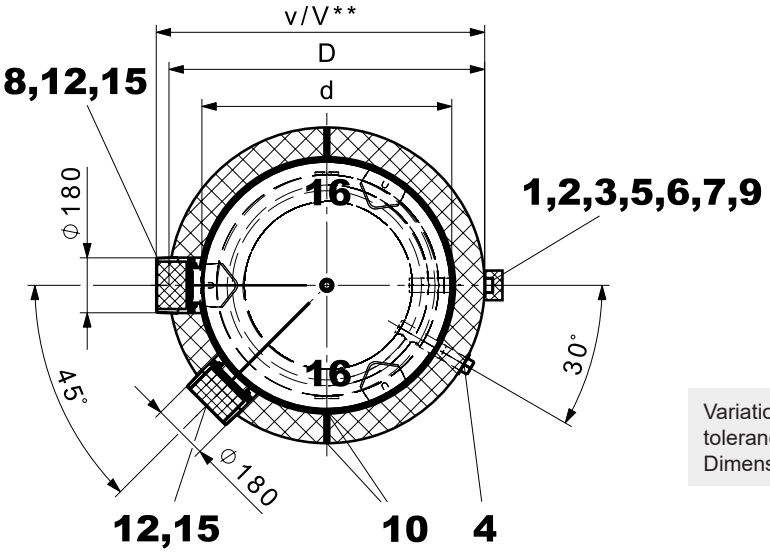

Variation because of the production tolerance possible
Dimension +/- 10 mm

1 Cold water G 1½″ (ET)
2 Domestic hot water G 1½″ (ET)
3 Solar circuit flow G 1½″ (ET)
4 Solar circuit return G 1½″ (ET)
(turned through 30° in section)
5 Flow supplemental heating G 1½″ (ET)
6 Return supplemental heating G 1½″ (ET)
7 Circulation G ¾″ (ET)
(removable insulated cap Ø 100 mm)
8 Thermometer
9 Connection for sensor/thermostat, inner Ø 16 mm
10 Sensor terminal strip (zip fastener)
12 Hand-hole flange (flange-mounted electric heating element)
Ø 180/120 mm, pitch circle Ø 150 mm, 8 x M10
15 Correx® impressed current anode sleeve Rp ¾″ (IT)
16 Transport strap

MultiVal ESRR type	D	d	H	h	a	b	c	f	g	i	k	m	n	p	r	s	t	u	v	V**	Tilting dimension
(800)	950	750	2033	1936	104	290	527	650	1120	1430	800	1890	382	1540	750	1455	1647	800	975	1020	1962
(1000)	1050	850	2063	1963	103	298	533	702	1172	1482	852	1902	388	1547	750	1527	1673	800	1075	1120	1991

** when using a flange-mounted electric heating element

Hoval calorifier CombiVal CR (200-1000)

- Calorifier made of stainless steel
- Flat section coils made of stainless steel, built in
- Thermal insulation made of polyester fleece with patented aluminium sealing bracket. Outer casing made of polypropylene, red coloured
  (200) 1-part
  (300-800) 2-part
  (1000) 3-part
- CombiVal CR (200-500)
  1 ½" sleeve for the mounting of a screw-in electric heating element, sensor terminal bar
- CombiVal CR (800,1000)
  Flange above as additional cleaning flange (SVGW regulation) or for the installation of a flange-mounted electric heating element.
- Flange below as cleaning flange or for installation of a flange-mounted electric heating element
- With thermometer
- Two terminal strips for contact sensors
- Observe limit values for chloride content in domestic water - see "Engineering".
- Connection cable for equipotential bonding, permanently mounted

Delivery
- Calorifier and thermal insulation completely installed (can be removed for installation)

On request
- Electric heating element
- Electric heating element for flange above
- Flange cover with sleeve for flange below for the installation of a screw-in electric heating element
- Correx® impressed current anode set

Range

CombiVal type		
CR	(200)	B
CR	(300)	B
CR	(500)	
CR	(800)	
CR	(1000)	

Screw-in electric heating element
Type EP 2.5 to EP 5
- Made of Incoloy® alloy 825
- Heat input 2.35 to 4.9 kW
- Incl. temperature control and safety temperature limiter
- Connection:
  EP 2.5: 3 x 400 V (1 x 230 V)
  EP 3.5 and EP 5: 3 x 400 V
- Not suitable for exclusively electric heating.

Delivery
- Delivered separately packed

On site
- Installation of the electric heating element

Flange-mounted electric heating element
Type EFHK-C 4 to EFHK-C 9
- Made of Incoloy® alloy 825
- Heat output 4.0 to 9.0 kW, according to the rules of the power works
- Incl. temperature control and safety temperature limiter
- Connection 3 x 400 V
- Not suitable for exclusively electric heating.

Delivery
- Delivered separately packed

On site
- Installation of the electric heating element

Calorifier

CombiVal CR (200-1000)

With built-in flat section coil made of stainless steel. CombiVal CR (200-1000) thermal insulation fully installed.

CombiVal CR type		Volume dm³	Heating surface m²	Part No.
(200)	B	218	1.28	7016 755
(300)	B	316	1.28	7016 756
(500)		544	1.70	7016 757
(800)		818	2.63	7016 758
(1000)		1042	2.63	7016 759

Notice
The connections must only be designed in stainless steel; if not, suitable isolating or bridging connectors (or MEPLA pipe transition pieces) must be used.
When using insulating or bridging connectors (galvanic isolation), the earth cable attached to the calorifier must not be connected. When using galvanised circulation pipes, a backwash filter must be installed.

Electric heating elements
see chapter “Electric heating elements”

Accessories

Kit Correx® impressed current anode UP1.9-924-L395/1
for long-term corrosion protection for installation in the stainless steel calorifier
with reduction R 1½″ - Rp ¾″
Installation length: 395 mm
Connection cable length: 1 x 3500 mm
1 Correx® impressed current anode
(up to 800 l)

6031 813

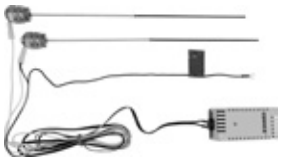

Kit Correx® impressed current anode UP1.9-924-L395/2
for long-term corrosion protection for installation in the stainless steel calorifier
Installation length: 395 mm
Connection cable length: 2 x 2000 mm
2 Correx® impressed current anodes
(from 1000 l)

6052 439

		Part No.
	**Immersion sensor TF/2P/5/6T, L = 5.0 m with plug** for TopTronic® E controller modules/ module expansions with exception of basic module district heating/fresh water or basic module district heating com cable length: 5 m with plug sensor sleeve diameter: 6 x 50 mm dewpoint-proof operating temperature: -20…105 °C protection class: IP67	2056 788
	**Immersion sensor TF/2P/5/6T, L = 5.0 m** for TopTronic® E controller modules/ module expansions with exception of basic module district heating/fresh water or basic module district heating com, cable length: 5 m without plug sensor sleeve diameter: 6 x 50 mm, dewpoint-proof, operating temperature: -20…105 °C, protection class: IP67	2055 888
	**Immersion sensor TF/12N/2.5/6T, L = 2.5 m** for gas boiler with RS-OT Cable length: 2.5 m Sensor sleeve diameter: 6 x 50 mm, dewpoint-proof, operating temperature: -20…105 °C, protection class: IP67	2056 791
At TopTronic® E, immersion sensor is included in the boiler controller or in the heating controller set.		
	**Calorifier thermostat control TW 12** Universal thermostat controller for thermostatic pump charge demand, setting in casing, visible from outside. 15-95 °C, switching difference 6 K, capillar length 700 mm incl. fastening material for Hoval calorifier, can be used with integrated immersion sleeve	6010 080
Thermal water mixer see “Various system components”		

Services

Commissioning
Commissioning by works service or Hoval trained authorised serviceman/company is condition for warranty.

For commissioning and other services please contact your Hoval sales office.

CombiVal CR (200-1000)

Type		(200)	(300)	(500)	(800)	(1000)
• Contenance	dm^3	218	316	544	818	1042
• Pression de service/Pression d'essai SSIGE	bar	6/12	6/12	6/12	6/12	6/12
• Température de service maximale	°C	95	95	95	95	95
• Isolation thermique en fibres polyester	mm	120	120	120	100	100
• Isolation thermique λ	W/mK	0.035	0.035	0.035	0.035	0.035
• Classement au feu		B2	B2	B2	B2	B2
• Perte de maintien d'eau chaude à 65 °C	W	56	67	80	136	142
• Poids de transport	kg	95	108	129	191	205
• Valeur U	W/m^2K	0.315	0.472	0.423	0.483	0.459
Registre de chauffage (monté à demeure)						
• Surface de chauffe	m^2	1.28	1.28	1.70	2.63	2.63
• Eau de chauffage	dm^3	4.1	4.1	5.1	7.4	7.4
• Perte de charge [1] d'eau	coeff. z	11.65	11.65	15.50	24.00	24.00
• Perte de charge [1] d'eau/glycol 50 %	coeff. z	15.73	15.73	20.93	32.40	32.40
• Pression de service/Pression d'essai SSIGE	bar	3/6	3/6	3/6	3/6	3/6
• Température de service maximale	°C	95	95	95	95	95
• Dimensions				voir Dimensions		

[1] Perte de charge registre de chauffage en mbar = débit volumique $(m^3/h)^2$ x z (1 mbar = 0.1 kPa)

Performance figure

Selection of the storage tank type
at a hot water temperature of 45 °C

Reading example
see engineering

	Comfort [1]			Standard [2]		
T >	60 °C	70 °C	80 °C	60 °C	70 °C	80 °C
NL v						
1						
2						
3						
4				200		
5	200					
6					200	
7		200				
8				300		
9	300					200
10			200			
11		300				
12					300	
13						
14			300			
15						
16	500					
17						300
18						
19				500		
20		500				
21						
22						
23						
24						
25					500	
26						
27			500			
28						
29						
30	800					
31						
32	1000					
33						
34						500
35						
36						
37						
38		800		800		
39						
40						
41				1000		
42		1000				
43						
44						
45						
46						
47						
48						
49					800	
50						

	Comfort [1]			Standard [2]		
T >	60 °C	70 °C	80 °C	60 °C	70 °C	80 °C
NL v						
51						
52			800			
53						
54						
55					1000	
56						
57			1000			
58						
59						
60						
61						
62						
63						
64						
65						
66						
67						
68						800
69						
70						
71						
72						
73						
74						
75						1000
76						
77						
78						
79						
80						
81						
82						
83						
84						
85						
86						
87						
88						
89						
90						
91						
92						
93						
94						
95						
96						
97						
98						
99						
100						
> 100						

T = Heating flow
NL = Performance figure
Performance figure NL acc. to DIN 4708 = number of flats which can be supplied with domestic hot water when the calorifier is heated and permanently reheated with the heat generator (standard flat: 1 bathroom - 4 rooms - 3.5 persons)
[1] Calculation with simultaneity factor according to DIN 4708 (preferred for Switzerland)
[2] Calculation with simultaneity factor according to Dresden Technical University

10 min peak output/N number with domestic hot water 45 °C
according to DIN 4708 (Comfort) and Dresden Technical University (Standard)

Reading example
see Engineering

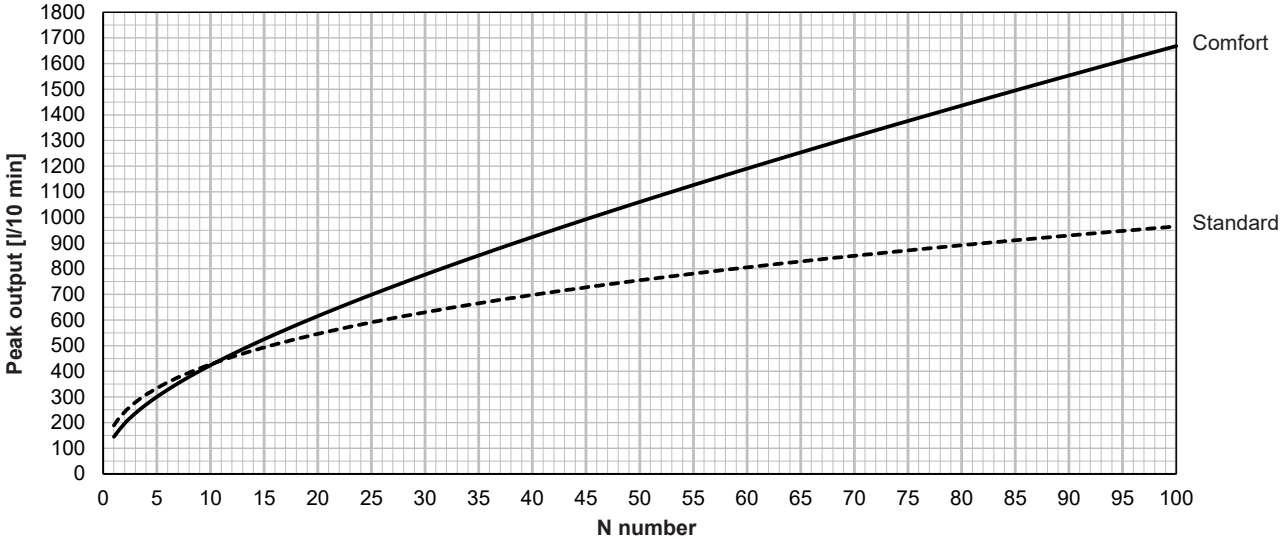

CombiVal CR (200)

Hot water output
Continuous output

Reading example
see engineering

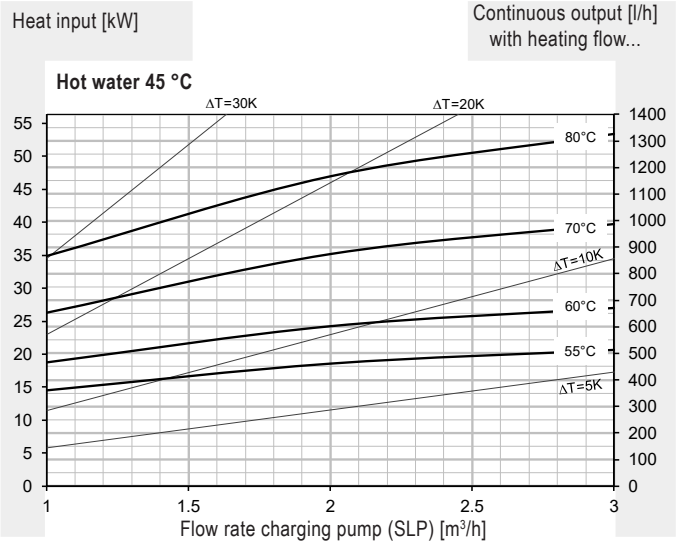

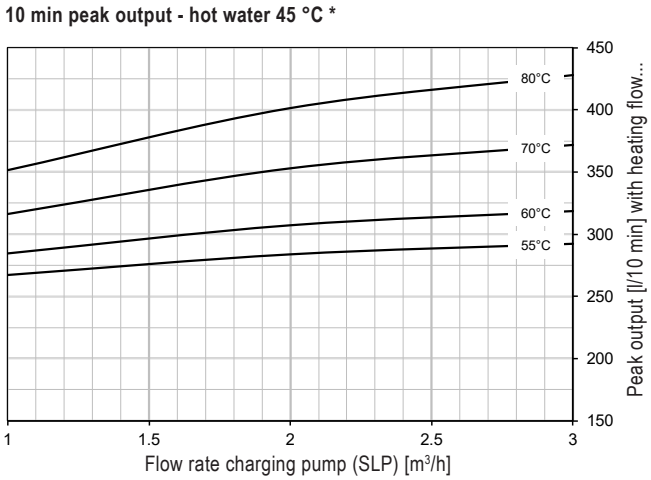

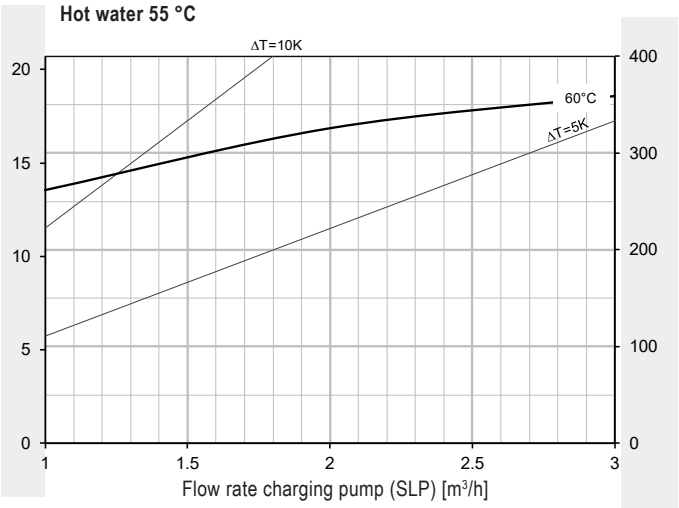

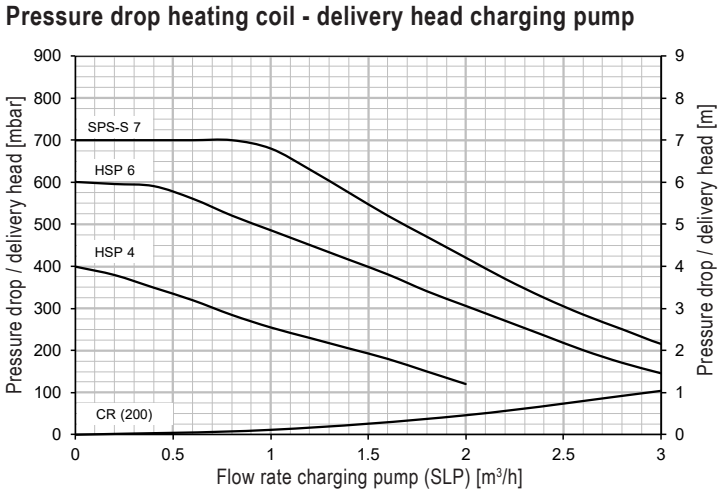

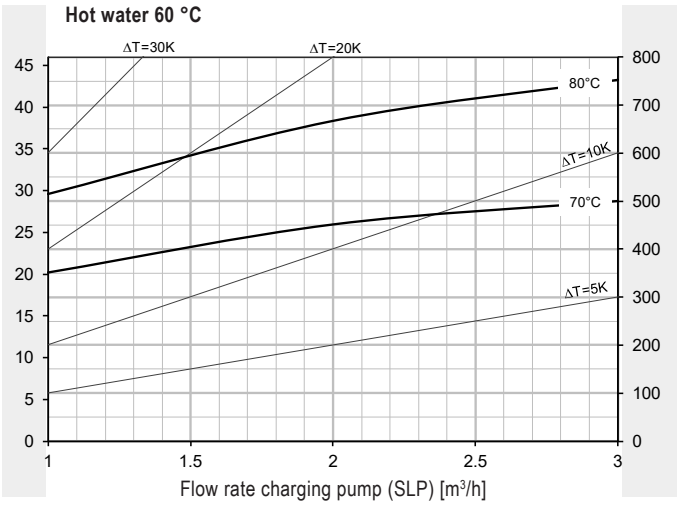

* Calorifier heated to 60 °C

CombiVal CR (300)

Hot water output
Continuous output

Reading example
see engineering

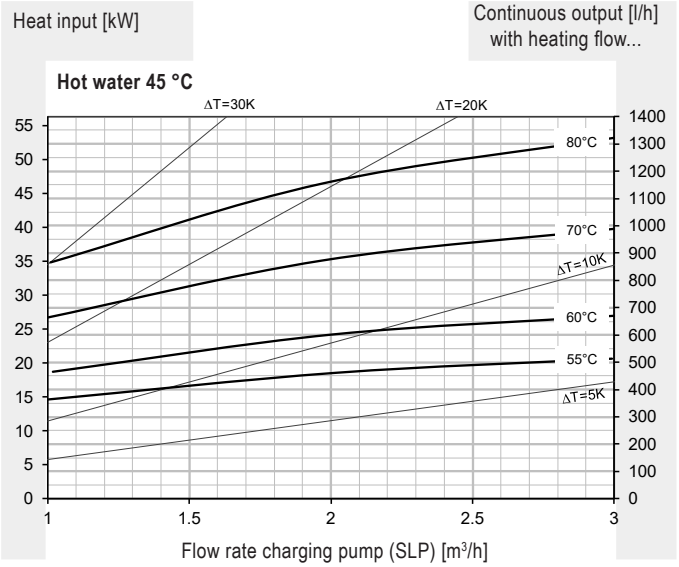

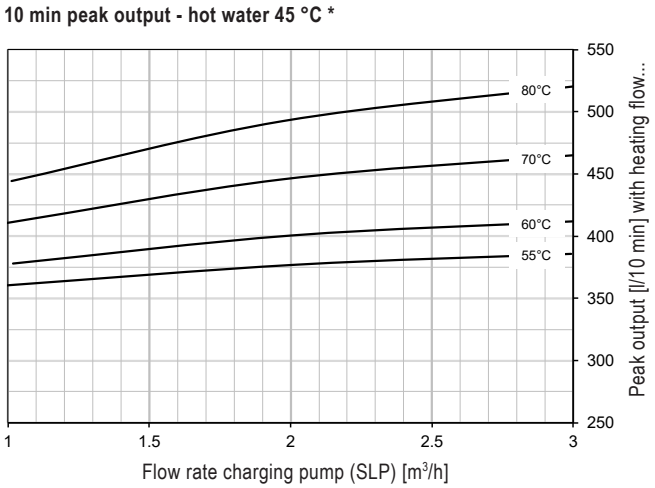

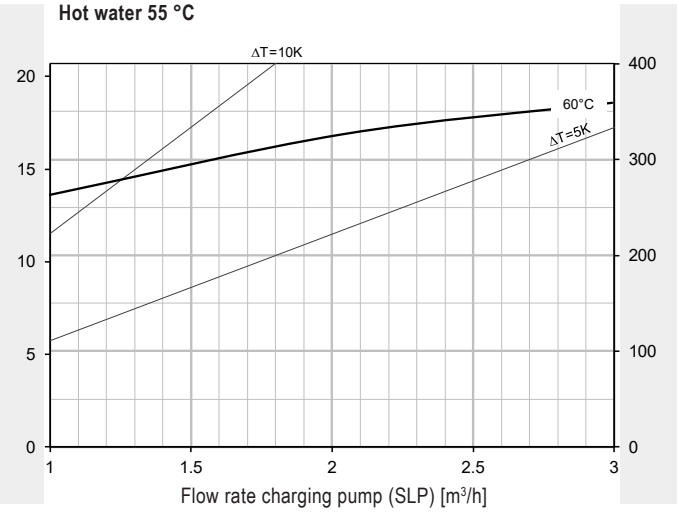

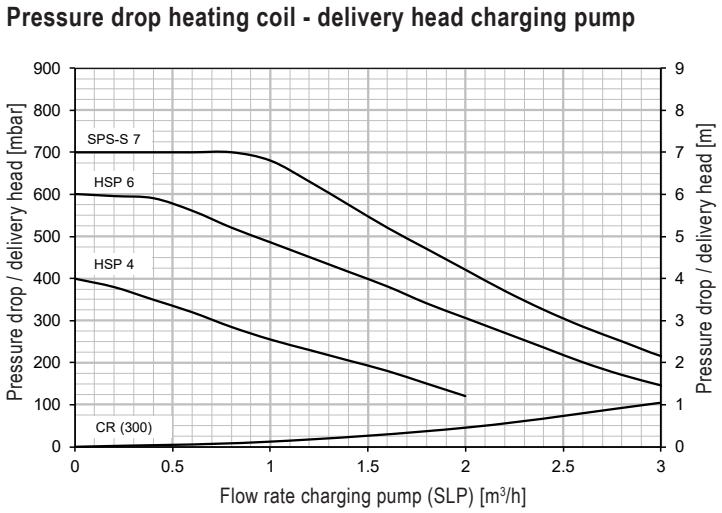

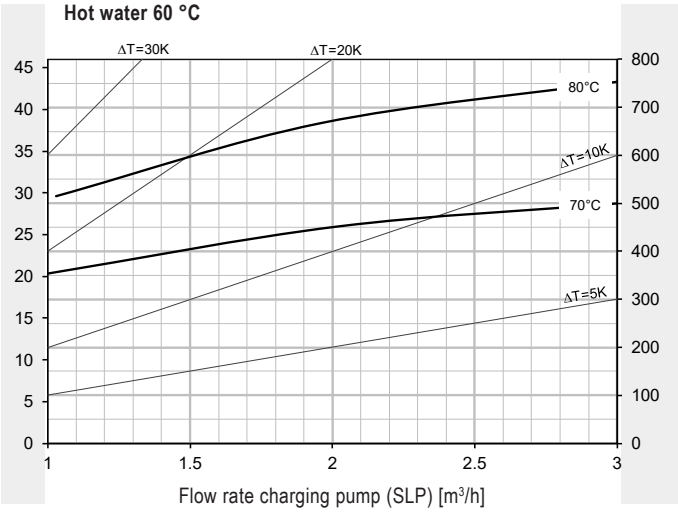

* Calorifier heated to 60 °C

CombiVal CR (500)

Hot water output
Continuous output

Reading example
see engineering

Heat input [kW]

Continuous output [l/h] with heating flow...

Hot water 45 °C

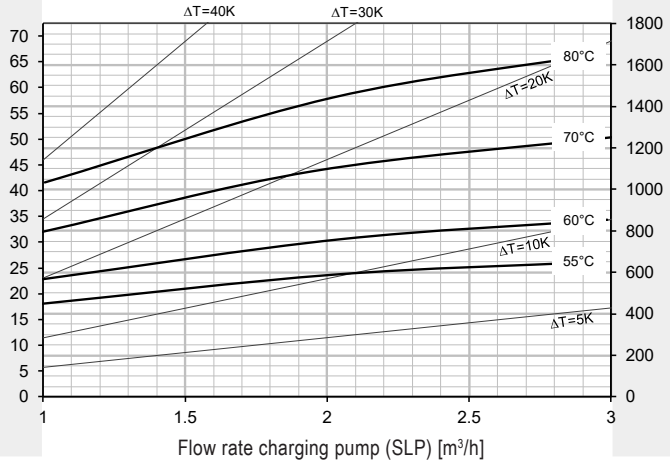

10 min peak output - hot water 45 °C *

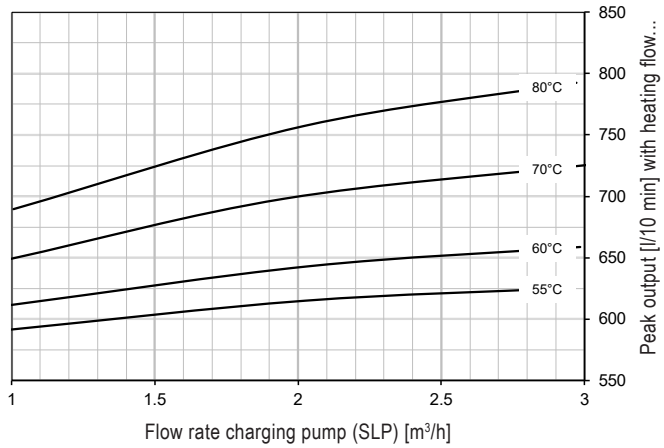

Hot water 55 °C

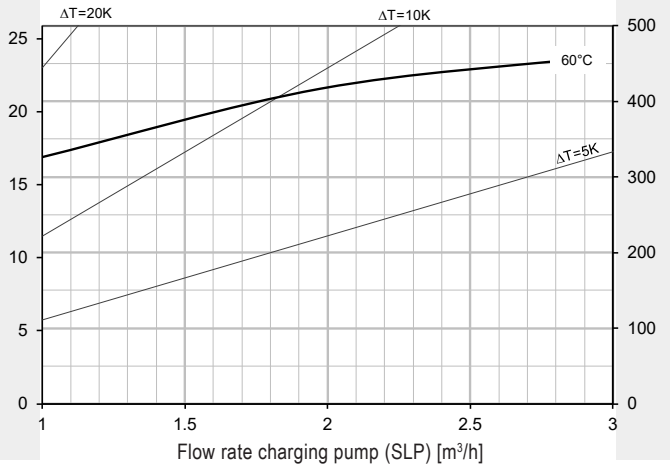

Pressure drop heating coil - delivery head charging pump

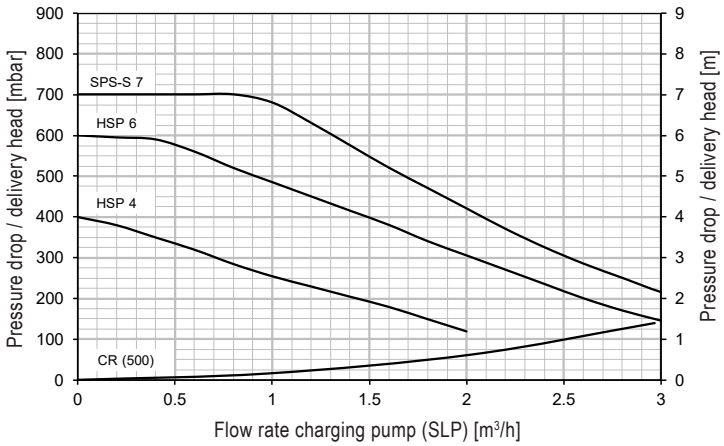

Hot water 60 °C

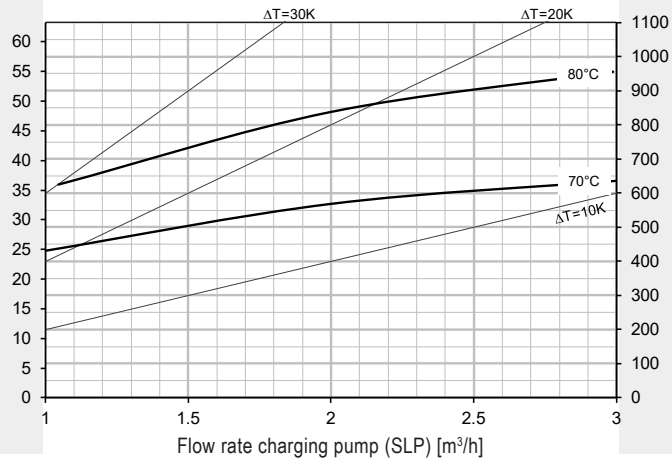

* Calorifier heated to 60 °C

CombiVal CR (800)

Hot water output
Continuous output

Reading example
see engineering

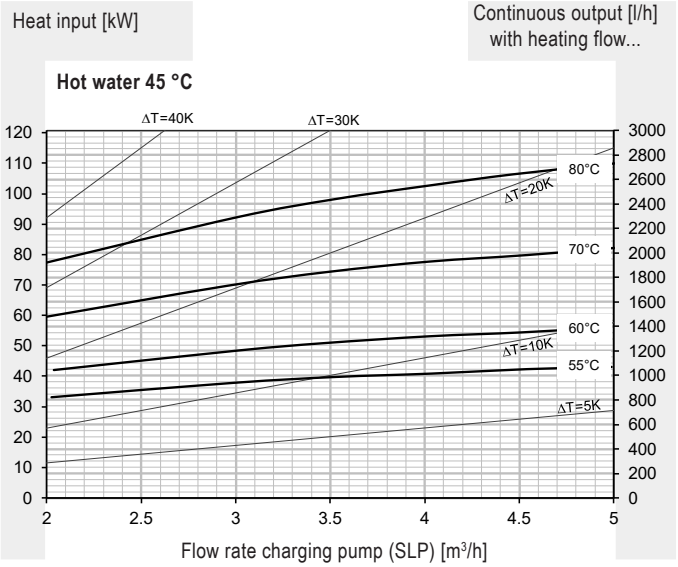

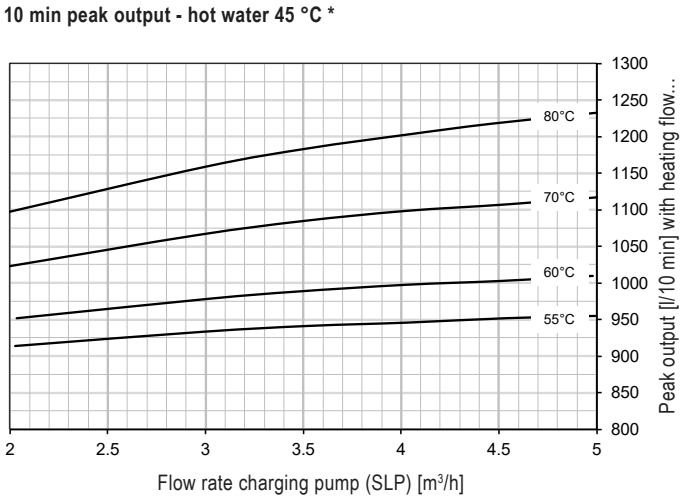

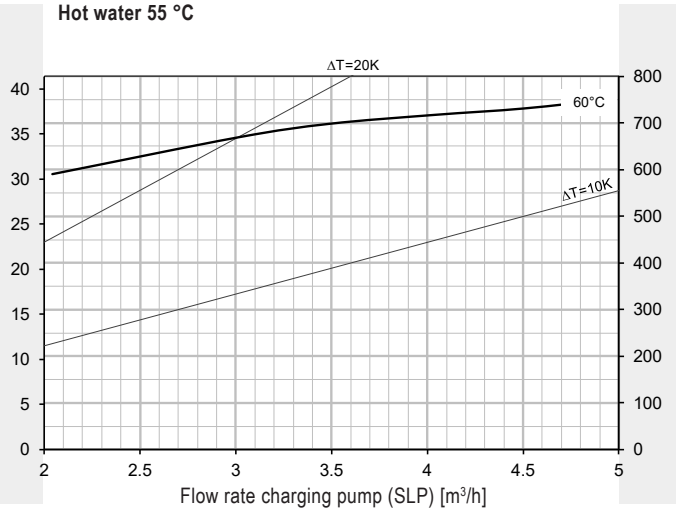

Pressure drop heating coil - delivery head charging pump

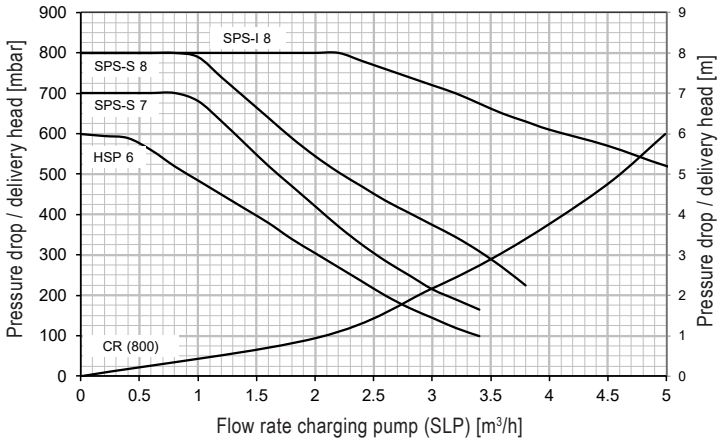

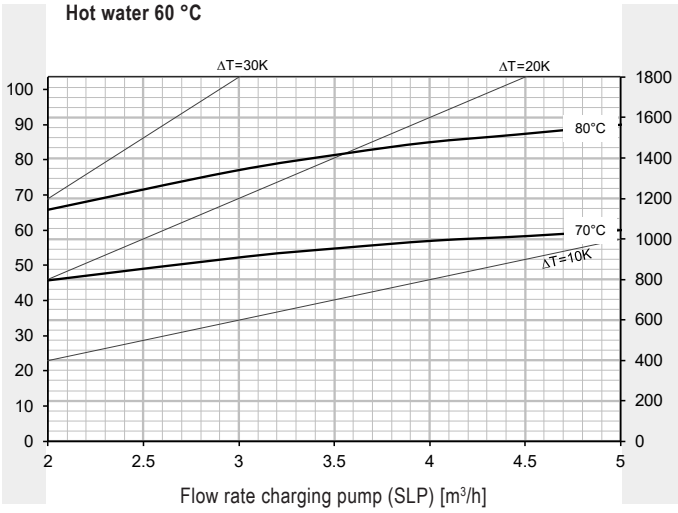

* Calorifier heated to 60 °C

CombiVal CR (1000)

Hot water output
Continuous output

Reading example
see engineering

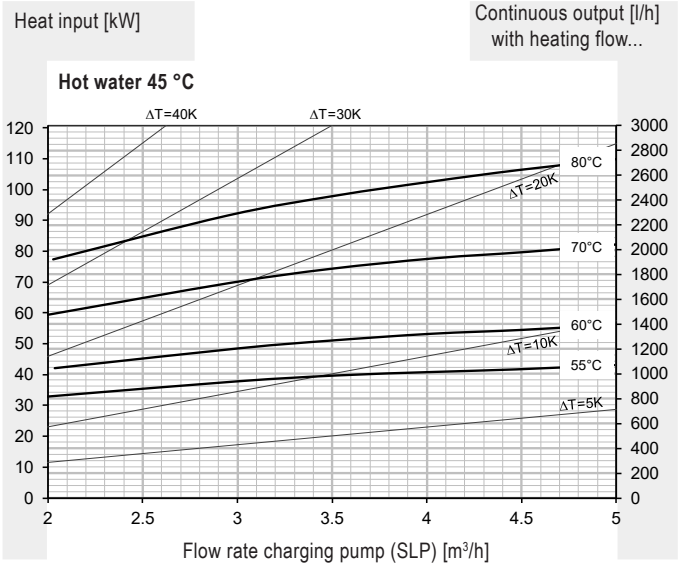

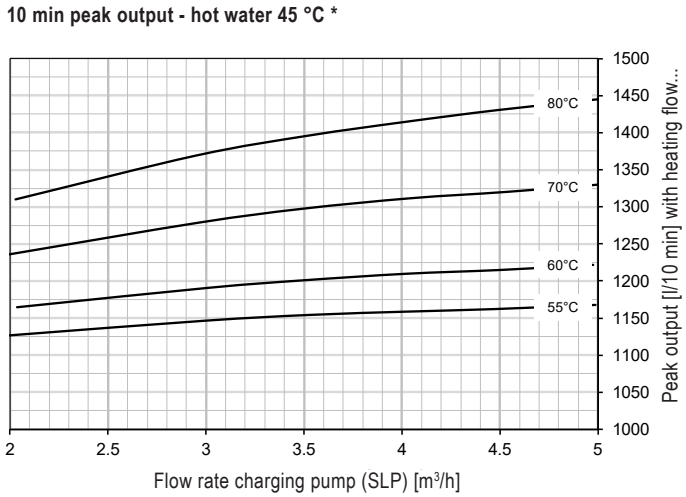

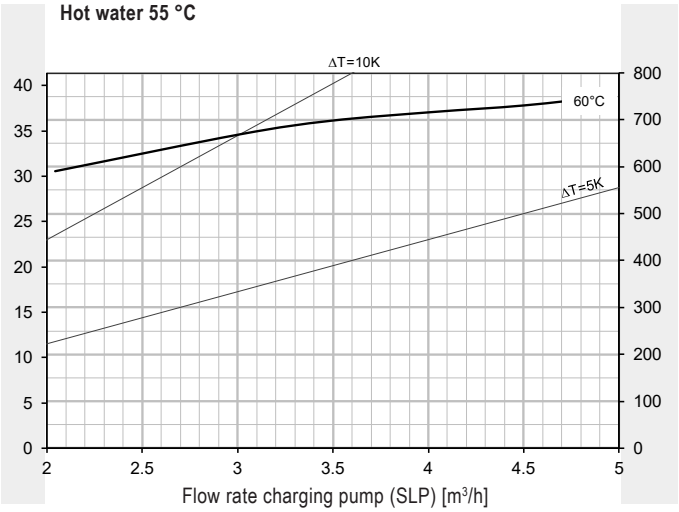

Pressure drop heating coil - delivery head charging pump

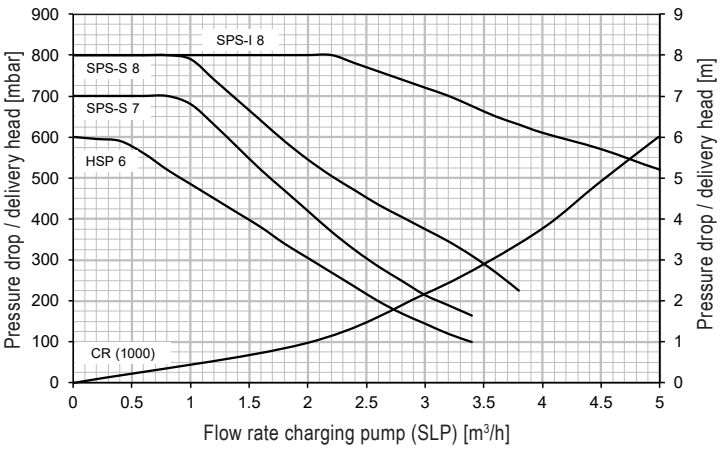

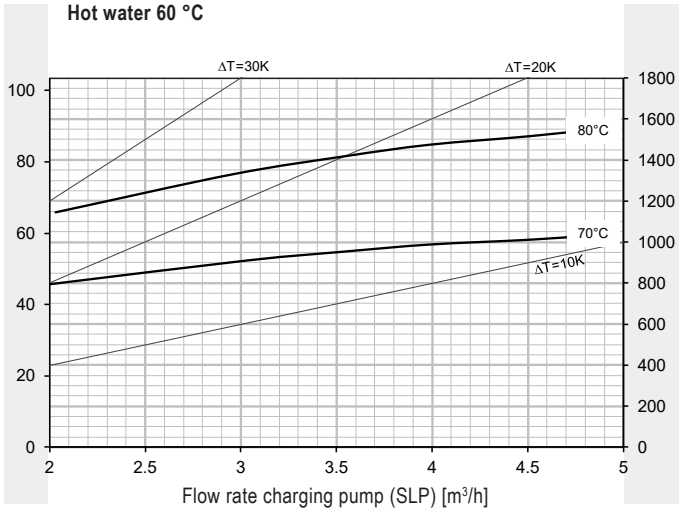

* Calorifier heated to 60 °C

CombiVal CR (200-500)
(Dimensions in mm)

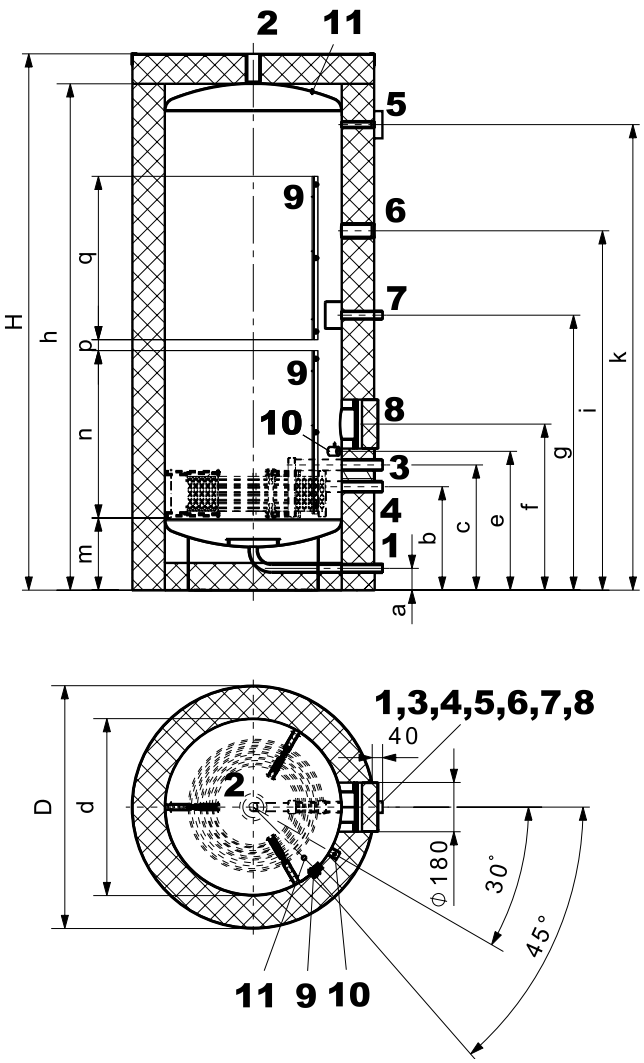

CombiVal CR (800,1000)

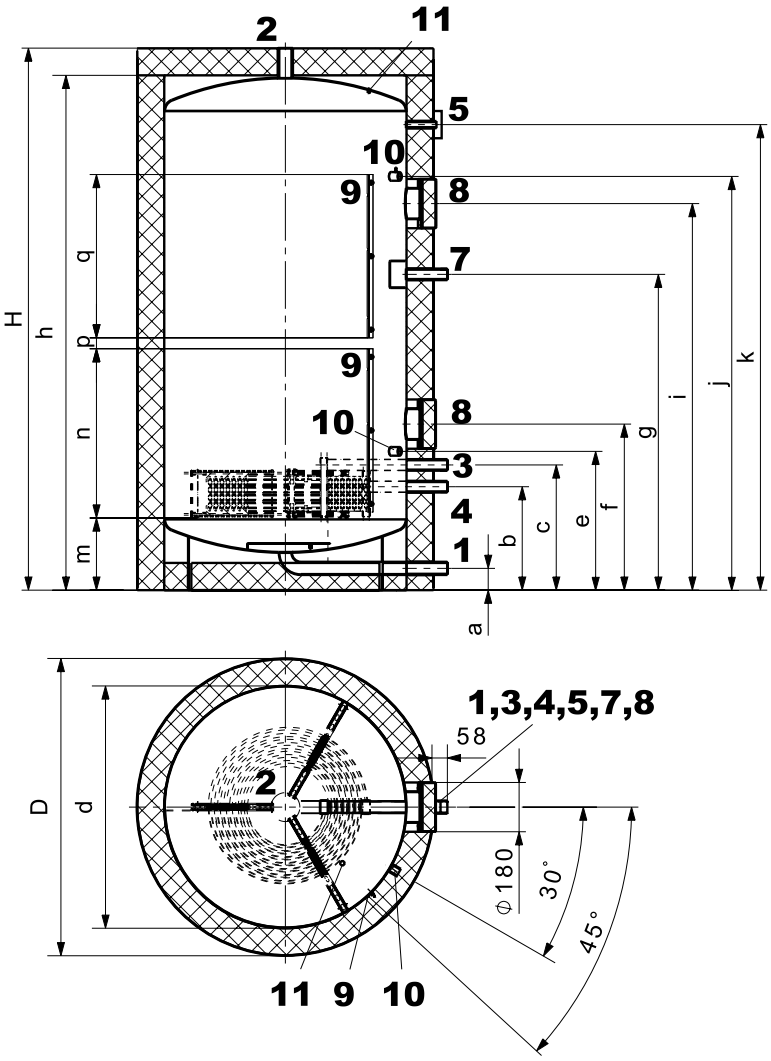

1	Cold water	type (200-500)	G 1″ (ET)
		type (800,1000)	G 1½″ (ET)
2	Hot water		Rp 1½″ (IT)
3	Flow heating		G 1¼″ (ET)
4	Return heating		G 1¼″ (ET)
5	Sleeve with mounted immersion sleeve and thermometer (immersion sleeve: L = 200 mm, inner Ø = 8 mm)		Rp ½″ (IT)
6	Connection for screw-in electric heating element		Rp 1½″ (IT)
7	Circulation	type (200-500)	G 1″ (ET)
		type (800,1000)	G 1¼″ (ET)

8	Hand-hole flange (flange-mounted electric heating element) Ø 180/110 mm, pitch circle Ø 150 mm, 8 x M10		
9	Sensor terminal bar 600 x 30 mm	type (200)	1 x
		type (300-1000)	2 x
10	Sleeve with grounding bolt for impressed current anode (perforated thermal insulation)		Rp ¾″ (IT)
		type (200-800)	1 x
		type (1000)	2 x
	Attention: observe the installation length		
11	Equipotential bonding		

Deviations possible as a result of manufacturing tolerances. Dimensions +/- 10 mm

CombiVal CR type	D	d	H	a	b	c	e	f	g	i	j	k	m	n	p	q	Tilting dimension
(200)	790	550	1213	80	380	460	510	610	760	860	-	980	310	540	-	-	1448
(300)	740	500	1949	80	380	460	510	610	1010	1320	-	1710	310	540	100	540	2085
(500)	890	650	1970	80	380	460	510	610	1010	1320	-	1710	310	540	100	540	2162
(800)	990	790	1991	80	380	460	510	610	1160	1420	-	1710	310	540	100	540	2224
(1000)	1090	890	1991	80	380	460	510	610	1160	1420	1520	1710	310	540	100	540	2270

Hoval Calorifier CombiVal CSR (300-1000)

- Calorifier made of stainless steel
- Thermal insulation made of polyester fleece with patented aluminium sealing bracket. Outer casing made of polypropylene, red coloured
  (300-800) 2-part
  (1000) 3-part
- CSR (300-500): 2 flat section coils with large heating surface made of stainless steel, built in for use with heat pumps or condensing boilers
- CSR (300-500)
  1 ½″ sleeve for the installation of a screw-in electric heating element, sensor terminal bar
- CSR (800-1000)
  2 flat section coils of stainless steel, built in for use with heat pumps or condensing boilers
- Flange above as additional cleaning flange (Swiss SVGW regulation) or for the installation of a flange-mounted electric heating element
- Flange below as cleaning flange or for the installation as flange-mounted electric heating element
- Connection cable for equipotential bonding, permanently mounted
- Distributor bar for parallel connection of the coils
- With thermometer
- Two terminal bars for contact sensor
- Observe limit values for chloride content in domestic water - see “Engineering”.

Delivery
- Calorifier and thermal insulation completely installed (can be removed for installation)
- Distributor bar delivered in separate packaging

On request
- Flange cover with 1½″ sleeve for the installation of the electric heating element
- Screw-in electric heating element
- Flange-mounted electric heating element for flange above
- Correx® impressed current anode set

Range

CombiVal type		
CSR	(300)	B
CSR	(400)	B
CSR	(500)	
CSR	(800)	
CSR	(1000)	
CSR	(1250)	
CSR	(1500)	
CSR	(2000)	

Hoval Calorifier CombiVal CSR (1250-2000)

- Calorifier made of stainless steel
- Thermal insulation made of polyester fleece with patented aluminium sealing bracket. Outer casing made of polypropylene, red coloured
  (1250-2000) 3-part
- Flange below as cleaning flange or for the installation of a flange-mounted electric heating element
- Flange above as additional cleaning flange (Swiss SVGW regulation) or for the installation of a flange-mounted electric heating element
- With 2 flat section coils made of stainless steel, built-in for use with heat pumps or condensing boilers
- With thermometer
- Two terminal bars for contact sensor
- Connection cable for equipotential bonding, permanently mounted
- Distributor bar for parallel connection of the coils
- Observe limit values for chloride content in domestic water - see “Engineering”.

Delivery
- Calorifier, thermal insulation kit, distributor bar delivered in separate packaging

On request
- Flange cover with 1½″ sleeve for the installation of the electric heating element
- Screw-in electric heating element
- Flange-mounted electric heating element for flange above
- Correx® impressed current anode set

On site
- Installation of the thermal insulation, distributor bar

Screw-in electric heating element

Type EP 2.5 to EP 5
- Made of Incoloy® alloy 825
- Heat input 2.35 to 4.9 kW
- Incl. temperature control and safety temperature limiter
- Connection:
  EP 2.5: 3 x 400 V (1 x 230 V)
  EP 3.5 and EP 5: 3 x 400 V
- Not suitable for exclusively electric heating

Delivery
- Delivered separately packed

On site
- Installation of the electric heating element

Flange-mounted electric heating element

Type EFHK-C 4 to EFHK-C 9
- Made of Incoloy® alloy 825
- Heat output 4.0 to 9.0 kW, according to the regulation of the current supplier
- With temperature regulation and safety temperature limiter
- Connection 3 x 400 V
- Not suitable for exclusively electric heating

Delivery
- Delivered separately packed

On site
- Mounting of thermal insulation

Calorifier

CombiVal CSR (300-2000)

With integrated flat section coils made of stainless steel, incl. distributor bar for parallel connection of the coils (separately packed)
CombiVal CSR (300-1000) thermal insulation fully mounted.
CombiVal CSR (1250-2000) calorifier and thermal insulation delivered separately packed

CombiVal CSR type		Volume dm³	Heating surface m²	Part No.
(300)	B	316	2.56	7016 760
(400)	B	439	3.4	7016 761
(500)		544	5.26	7016 762
(800)		818	6.3	7016 763
(1000)		1042	10.0	7016 764
(1250)		1189	10.0	7016 765
(1500)		1625	11.3	7016 766
(2000)		1958	12.7	7016 767

Notice
The connections must only be designed in stainless steel; if not, suitable isolating or bridging connectors (or MEPLA pipe transition pieces) must be used.
When using insulating or bridging connectors (galvanic isolation), the earth cable attached to the calorifier must not be connected. When using galvanised circulation pipes, a backwash filter must be installed.

Electric heating elements
see chapter “Electric heating elements”

Accessories

Kit Correx® impressed current anode UP1.9-924-L395/1 — 6031 813
for long-term corrosion protection for installation in the stainless steel calorifier
with reduction R 1½″ - Rp ¾″
Installation length: 395 mm
Connection cable length: 1 x 3500 mm
1 Correx® impressed current anode (up to 800 l)

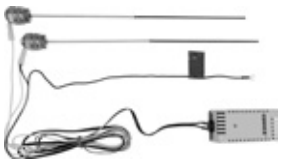

Kit Correx® impressed current anode UP1.9-924-L395/2 — 6052 439
for long-term corrosion protection for installation in the stainless steel calorifier
Installation length: 395 mm
Connection cable length: 2 x 2000 mm
2 Correx® impressed current anodes (from 1000 l)

		Part No.
	**Immersion sensor TF/2P/5/6T, L = 5.0 m with plug** for TopTronic® E controller modules/ module expansions with exception of basic module district heating/fresh water or basic module district heating com cable length: 5 m with plug sensor sleeve diameter: 6 x 50 mm dewpoint-proof operating temperature: -20…105 °C protection class: IP67	2056 788
	**Immersion sensor TF/2P/5/6T, L = 5.0 m** for TopTronic® E controller modules/ module expansions with exception of basic module district heating/fresh water or basic module district heating com, cable length: 5 m without plug sensor sleeve diameter: 6 x 50 mm, dewpoint-proof, operating temperature: -20…105 °C, protection class: IP67	2055 888
	**Immersion sensor TF/12N/2.5/6T, L = 2.5 m** for gas boiler with RS-OT Cable length: 2.5 m Sensor sleeve diameter: 6 x 50 mm, dewpoint-proof, operating temperature: -20…105 °C, protection class: IP67	2056 791
At TopTronic® E, immersion sensor is included in the boiler controller or in the heating controller set.		
	**Calorifier thermostat control TW 12** Universal thermostat controller for thermostatic pump charge demand, setting in casing, visible from outside. 15-95 °C, switching difference 6 K, capillar length 700 mm incl. fastening material for Hoval calorifier, can be used with integrated immersion sleeve	6010 080
Thermal water mixer see “Various system components”		

Services

Commissioning
Commissioning by works service or Hoval trained authorised serviceman/company is condition for warranty.

For commissioning and other services please contact your Hoval sales office.

CombiVal CSR (300-2000)

Type		(300)	(400)	(500)	(800)	(1000)	(1250)	(1500)	(2000)
• Contenance	dm^3	316	439	544	818	1042	1189	1625	1958
• Pression de service/Pression d'essai SSIGE	bar	6/12	6/12	6/12	6/12	6/12	6/12	6/12	6/12
• Température de service maximale	°C	95	95	95	95	95	95	95	95
• Isolation thermique en fibres polyester	mm	120	120	120	100	100	120	120	120
• Isolation thermique λ	W/mK	0.035	0.035	0.035	0.035	0.035	0.035	0.035	0.035
• Classement au feu		B2	B2	B2	B2	B2	B2	B2	B2
• Perte de maintien d'eau chaude à 65 °C	W	67	72	80	136	142	154	176	180
• Poids de transport	kg	122	140	161	224	268	314	431	468
• Valeur U	W/m^2K	0.272	0.259	0.259	0.387	0.360	0.346	0.338	0.338
Registre de chauffage (monté à demeure)									
• Surface de chauffe	m^2	2.56	3.40	5.26	6.30	10.00	10.00	11.30	12.70
• Eau de chauffage	dm^3	7.2	9.3	13.8	16.3	25.3	25.3	28.4	31.8
• Perte de charge [1] d'eau	coeff. z	1.88	2.48	3.84	4.61	7.24	7.24	8.24	9.28
• Perte de charge [1] d'eau/glycol 50 %	coeff. z	2.54	3.35	5.18	6.22	9.37	9.37	11.12	12.53
• Pression de service/Pression d'essai SSIGE	bar	3/6	3/6	3/6	3/6	3/6	3/6	3/6	3/6
• Température de service maximale	°C	95	95	95	95	95	95	95	95
• Dimensions					voir Dimensions				

[1] Perte de charge registre de chauffage en mbar = débit volumique $(m^3/h)^2$ x z (1 mbar = 0.1 kPa)

Performance figure

Selection of the storage tank type
at a hot water temperature of 45 °C

Reading example
see engineering

	Comfort [1]			Standard [2]		
T >	60 °C	70 °C	80 °C	60 °C	70 °C	80 °C
NL v						
1						
2						
3						
4						
5						
6						
7						
8						
9						
10						
11						
12	300					
13				300		
14						
15						
16						
17		300				
18						
19						
20						
21	400				300	
22			300			
23						
24						
25						
26				400		
27		400				
28						
29						
30						
31						
32						300
33	500					
34			400			
35						
36						
37						
38				500	400	
39						
40						
41		500				
42						
43						
44						
45						
46						
47						
48						
49	800					
50						

	Comfort [1]			Standard [2]		
T >	60 °C	70 °C	80 °C	60 °C	70 °C	80 °C
NL v						
51			500			
52						
53						400
54						
55						
56					500	
57						
58						
59						
60						
61						
62						
63						
64				800		
65						
66						
67						
68						
69						
70		800				
71	1000					
72						
73						
74						
75						
76	1250					500
77						
78						
79						
80						
81						
82						
83						
84						
85						
86						
87						
88						
89						
90						
91						
92					800	
93						
94	1500			1000		
95						
96						
97						
98			800			
99						
100						
> 100	2000	1000	1000	1250	1000	800
		1250	1250	1500	1250	1000
		1500	1500	2000	1500	1250
		2000	2000		2000	1500
						2000

T = Heating flow
NL = Performance figure
Performance figure NL acc. to DIN 4708 = number of flats which can be supplied with domestic hot water when the calorifier is heated and permanently reheated with the heat generator (standard flat: 1 bathroom - 4 rooms - 3.5 persons)
[1] Calculation with simultaneity factor according to DIN 4708 (preferred for Switzerland)
[2] Calculation with simultaneity factor according to Dresden Technical University

10 min peak output/N number with domestic hot water 45 °C
according to DIN 4708 (Comfort) and Dresden Technical University (Standard)

Reading example
see Engineering

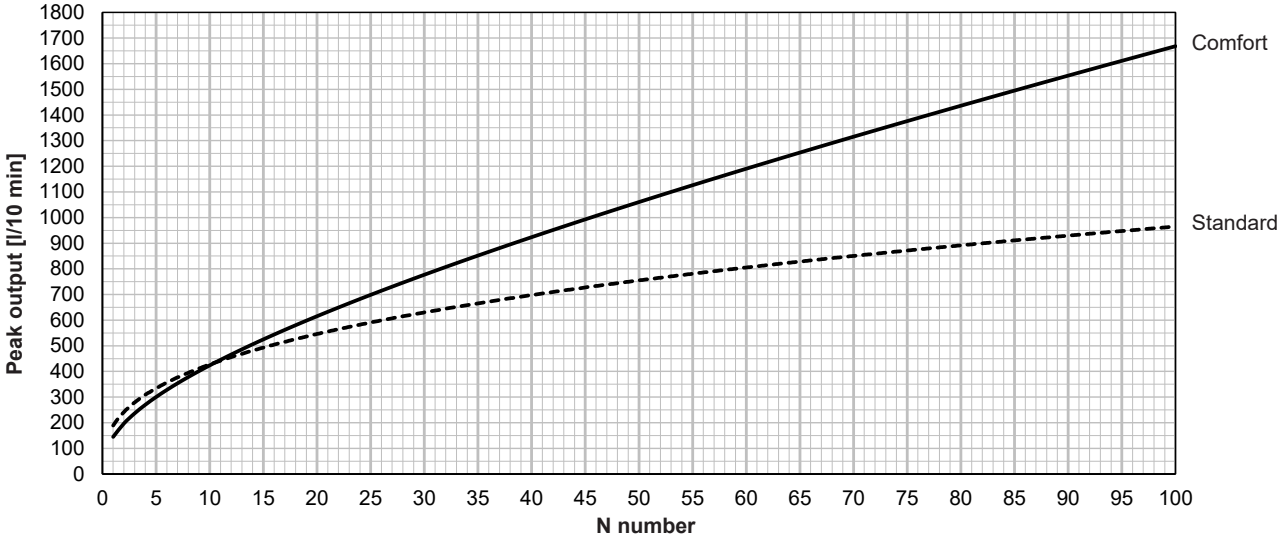

CombiVal CSR (300)

Hot water output
Continuous output

Reading example
see engineering

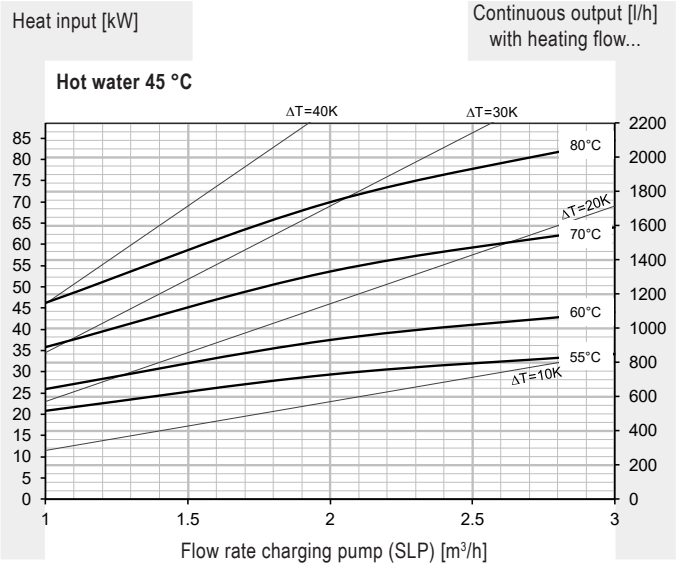

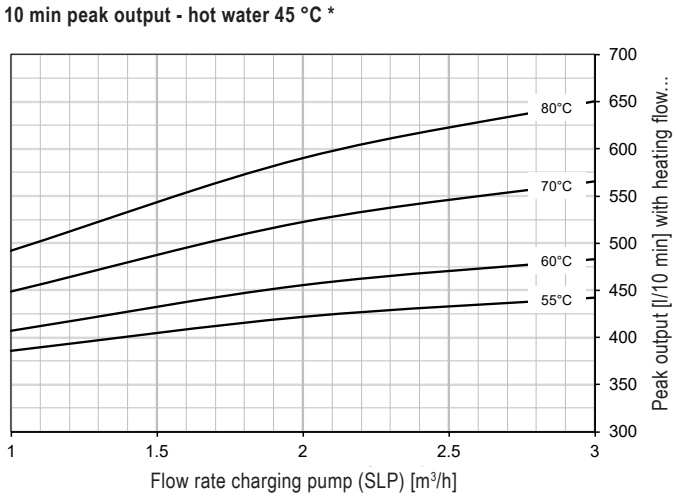

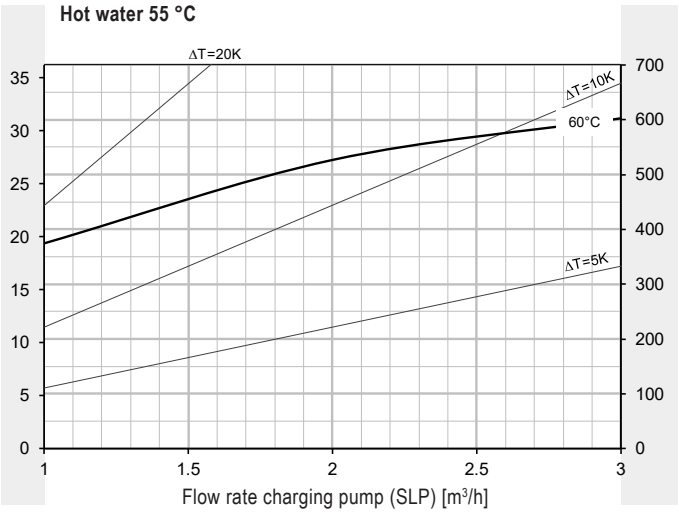

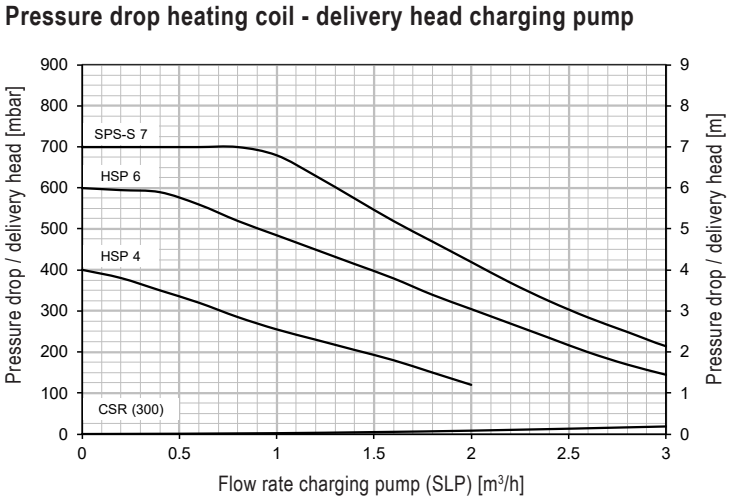

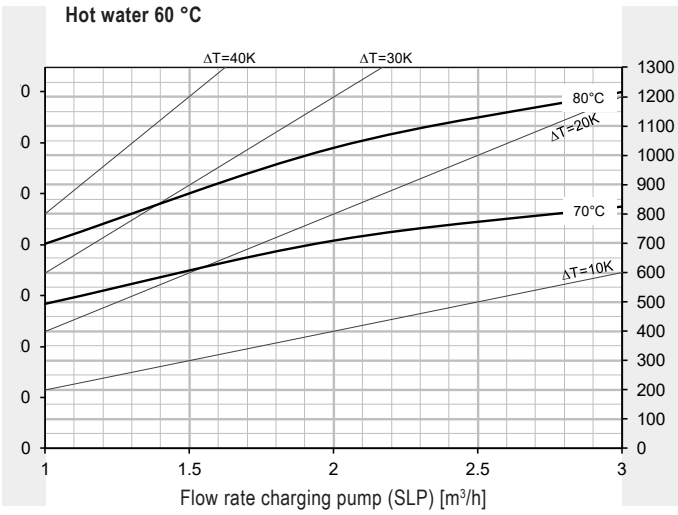

* Calorifier heated to 60 °C

CombiVal CSR (400)

Hot water output
Continuous output

Reading example
see engineering

Heat input [kW]

Continuous output [l/h] with heating flow...

Hot water 45 °C

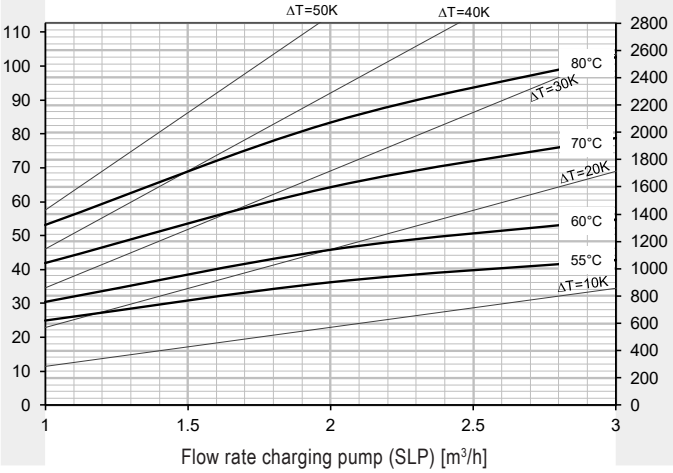

10 min peak output - hot water 45 °C *

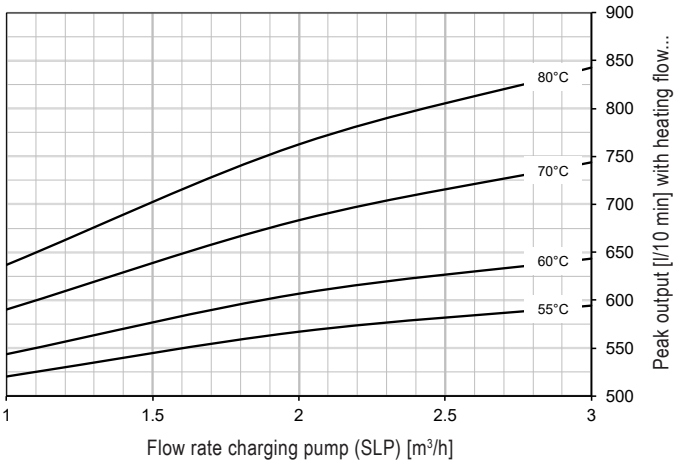

Hot water 55 °C

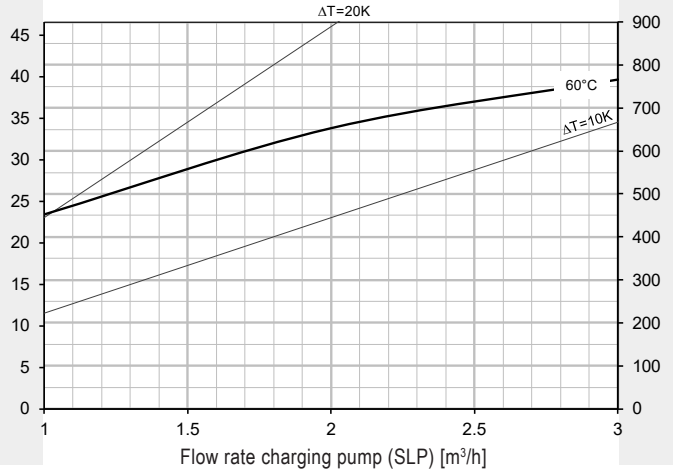

Pressure drop heating coil - delivery head charging pump

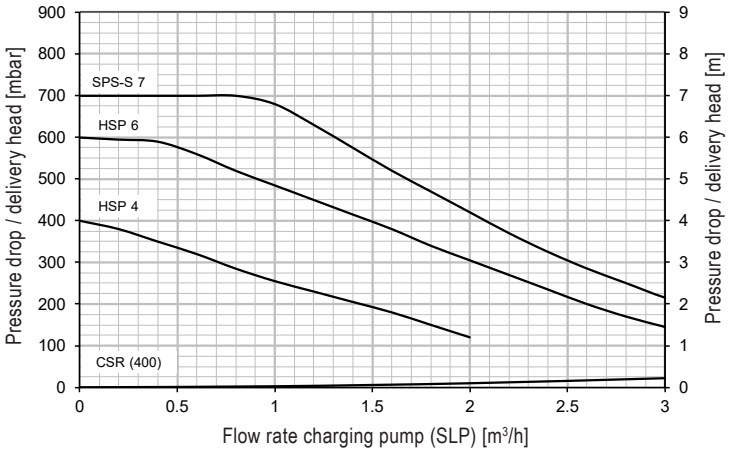

Hot water 60 °C

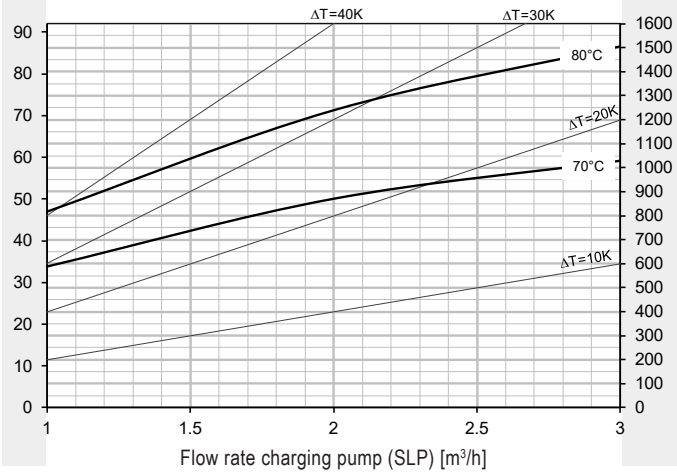

* Calorifier heated to 60 °C

CombiVal CSR (500)

Hot water output
Continuous output

Reading example
see engineering

Heat input [kW]

Continuous output [l/h] with heating flow...

Hot water 45 °C

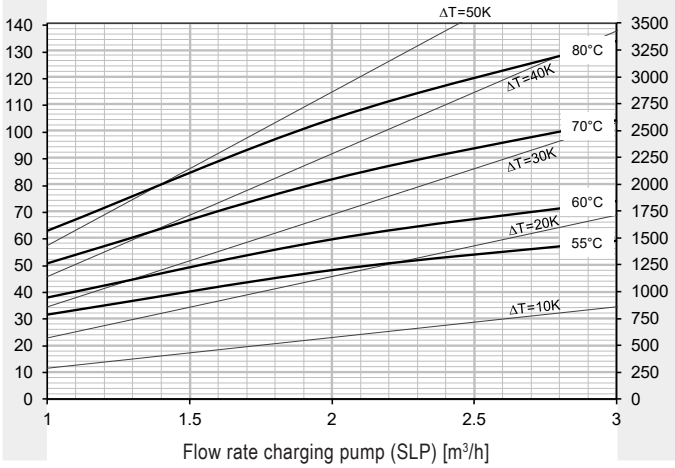

10 min peak output - hot water 45 °C *

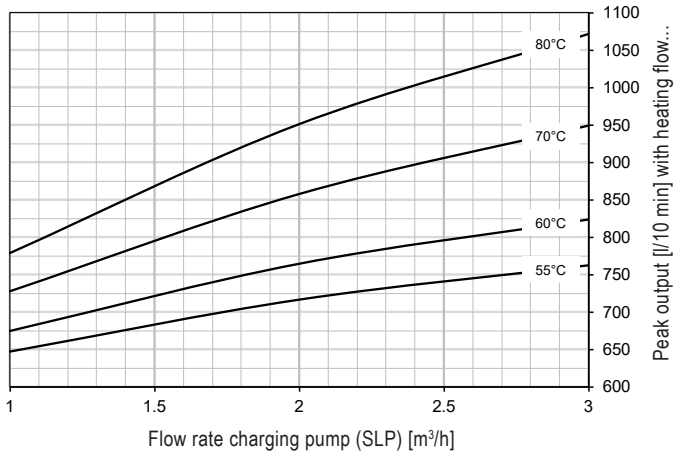

Hot water 55 °C

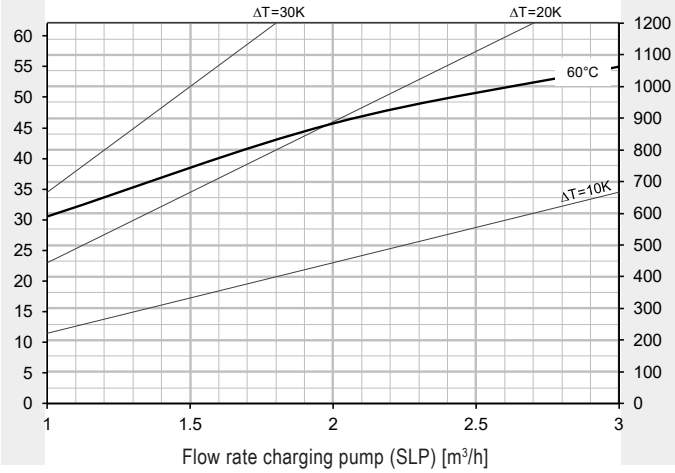

Pressure drop heating coil - delivery head charging pump

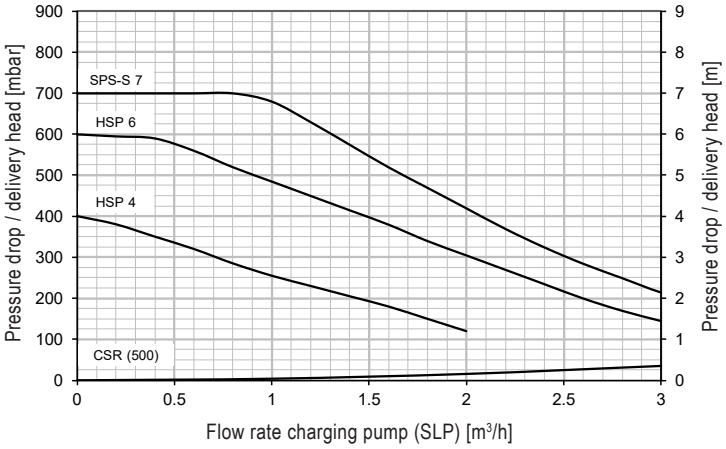

Hot water 60 °C

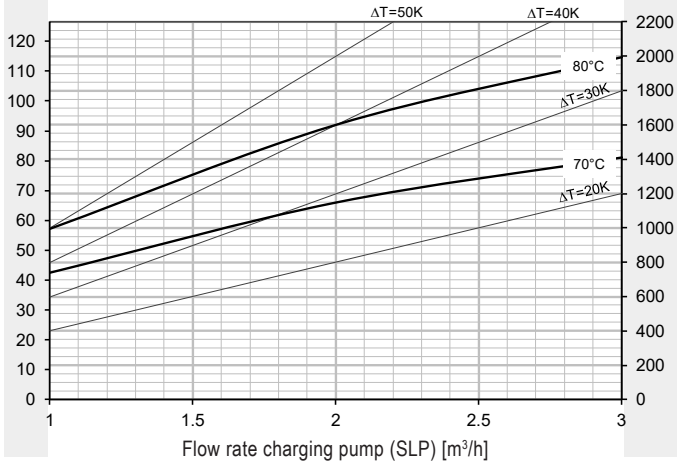

* Calorifier heated to 60 °C

CombiVal CSR (800)

Hot water output
Continuous output

Reading example
see engineering

Heat input [kW]

Continuous output [l/h] with heating flow...

Hot water 45 °C

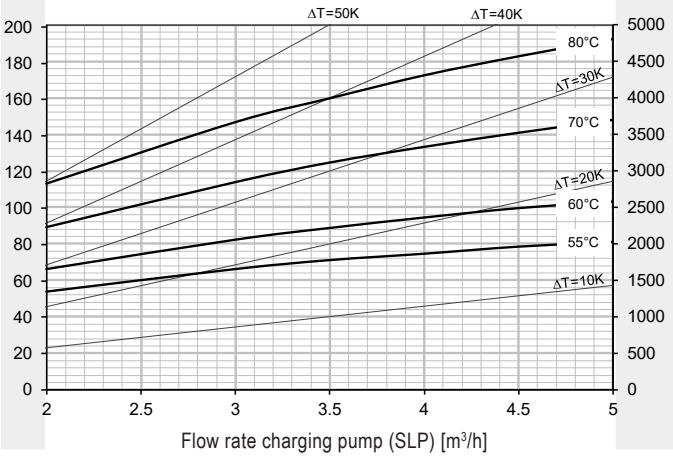

10 min peak output - hot water 45 °C *

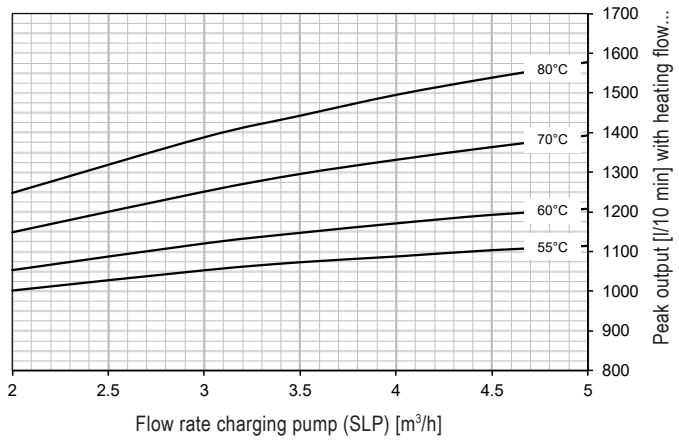

Hot water 55 °C

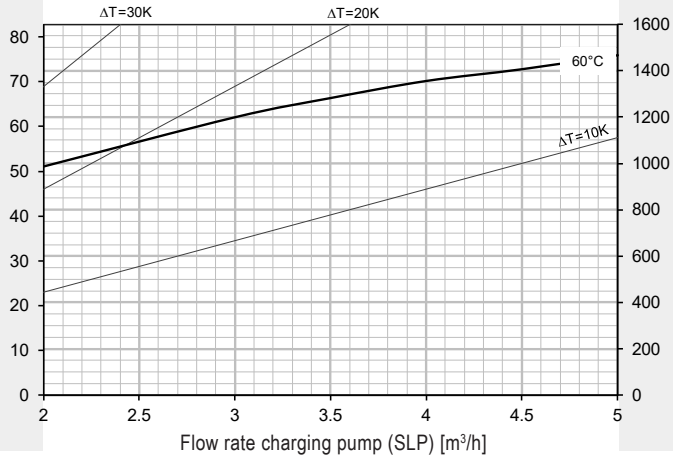

Pressure drop heating coil - delivery head charging pump

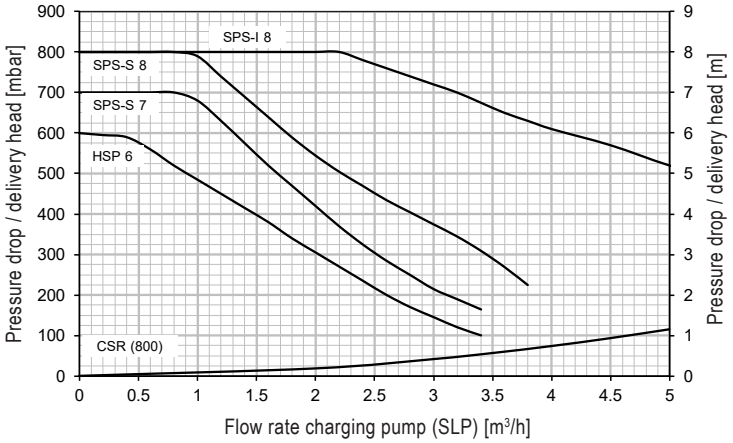

Hot water 60 °C

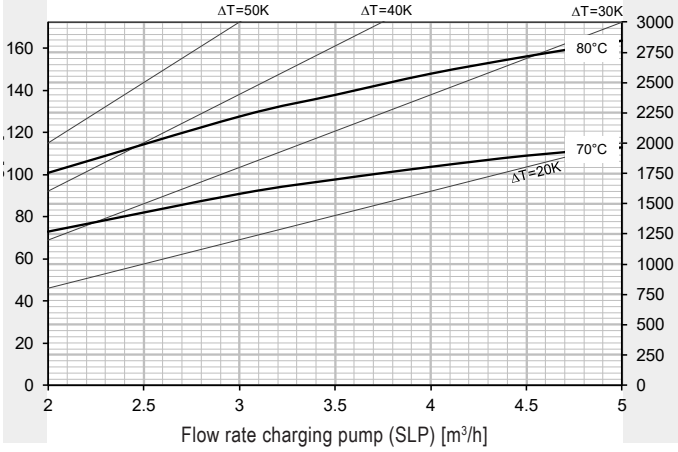

* Calorifier heated to 60 °C

CombiVal CSR (1000)

Hot water output
Continuous output

Reading example
see engineering

Heat input [kW]

Continuous output [l/h] with heating flow...

Hot water 45 °C

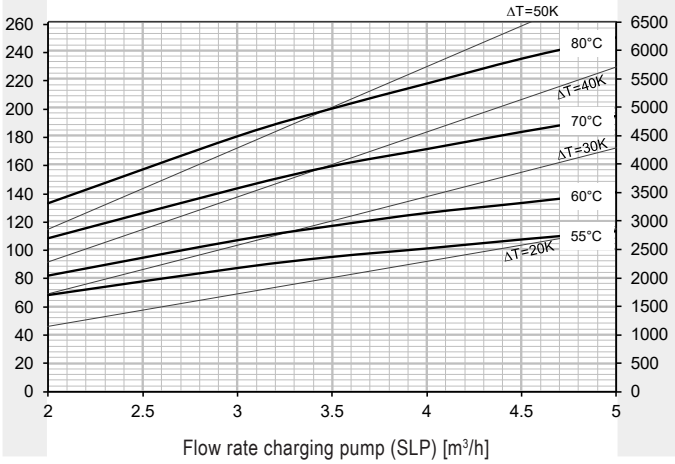

10 min peak output - hot water 45 °C *

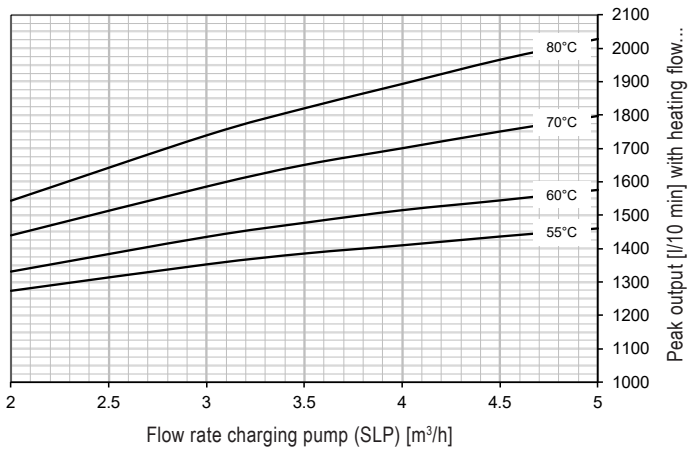

Hot water 55 °C

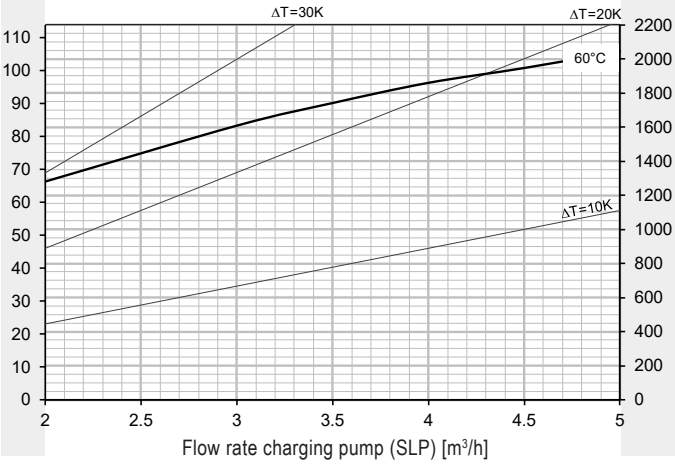

Pressure drop heating coil - delivery head charging pump

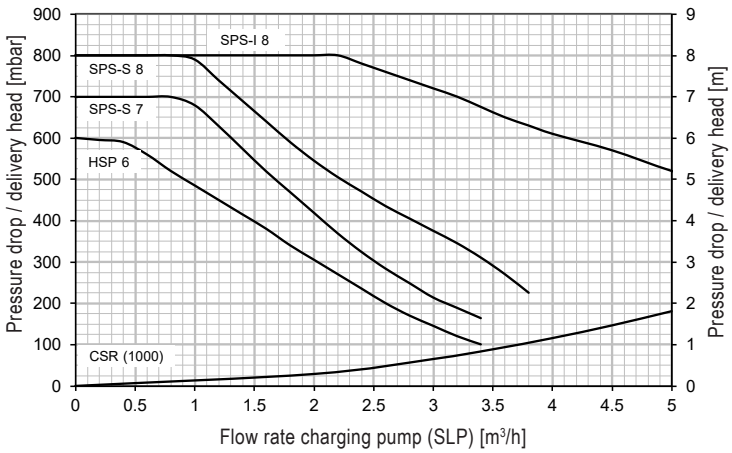

Hot water 60 °C

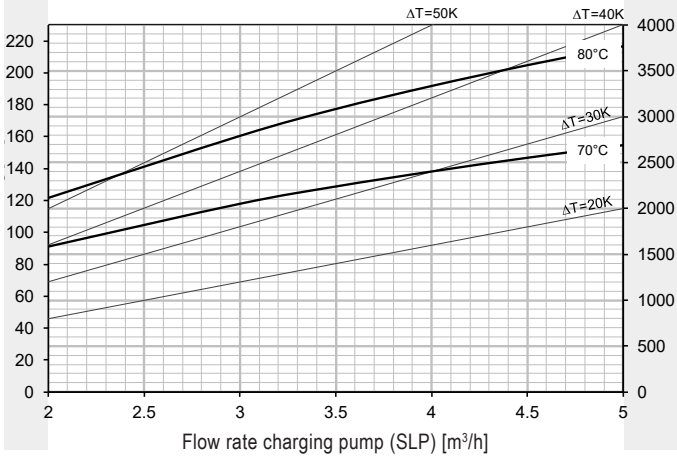

* Calorifier heated to 60 °C

CombiVal CSR (1250)

Hot water output
Continuous output

Reading example
see engineering

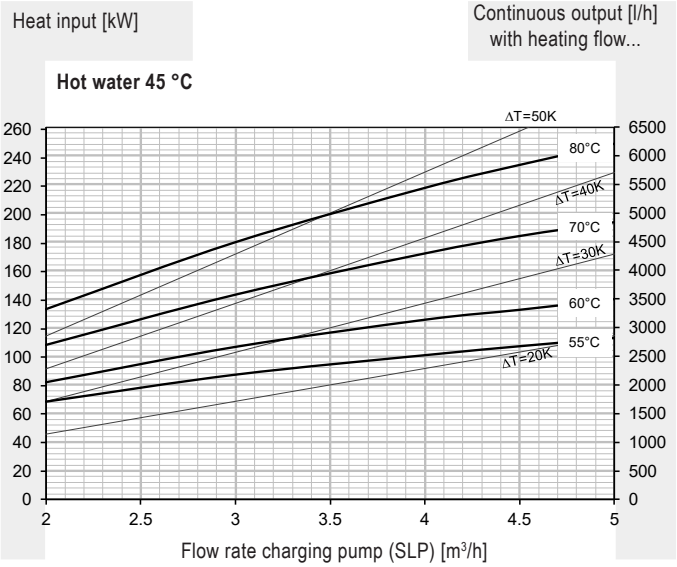

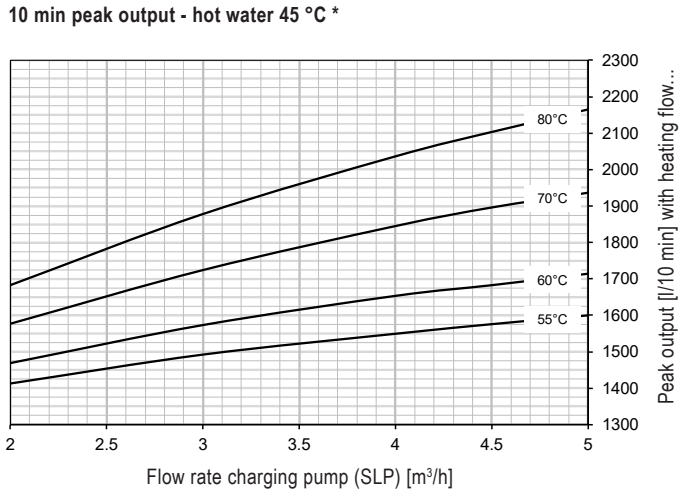

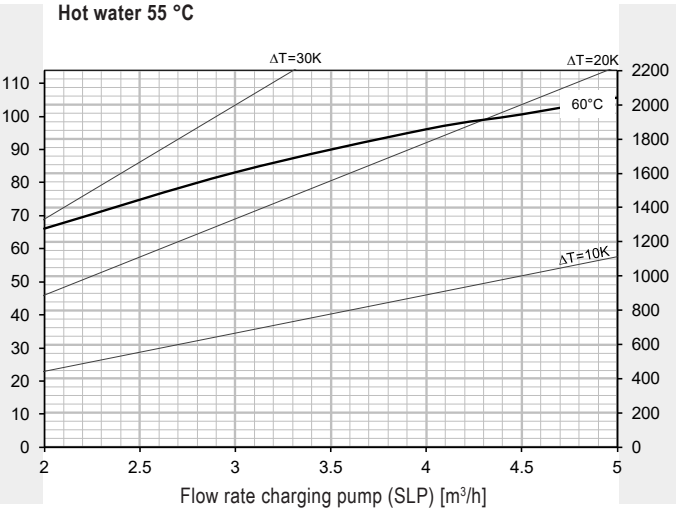

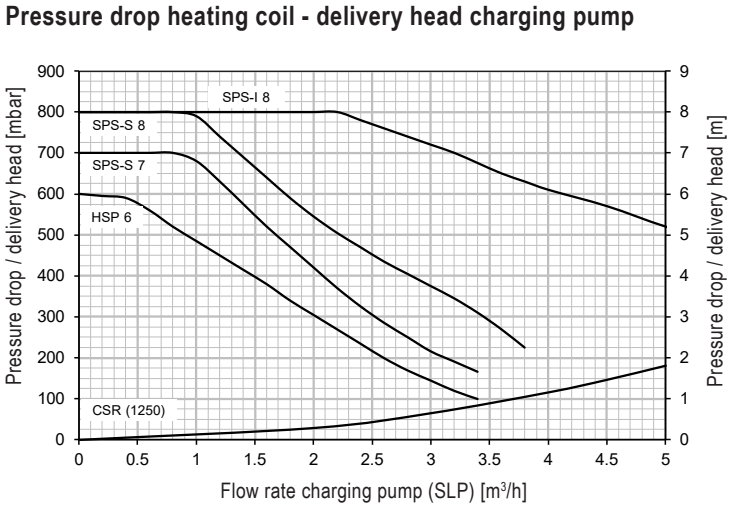

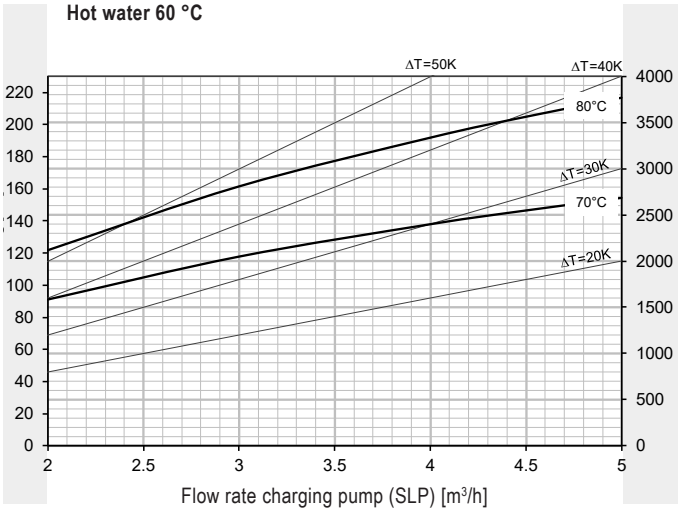

* Calorifier heated to 60 °C

CombiVal CSR (1500)

Hot water output
Continuous output

Reading example
see engineering

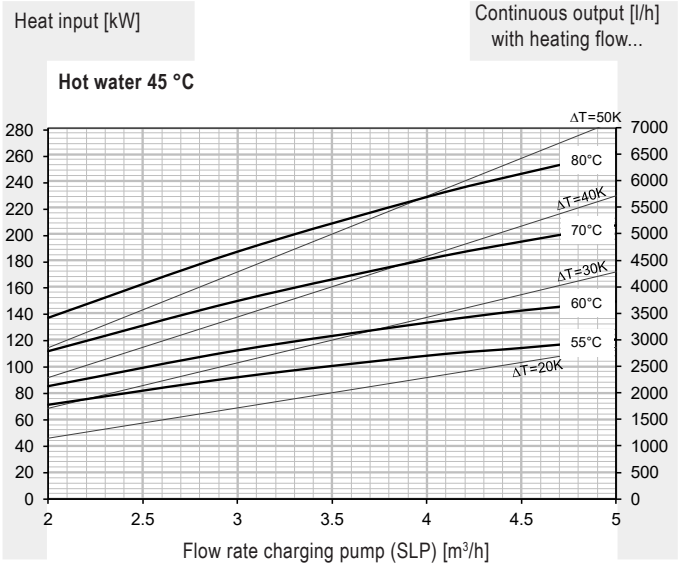

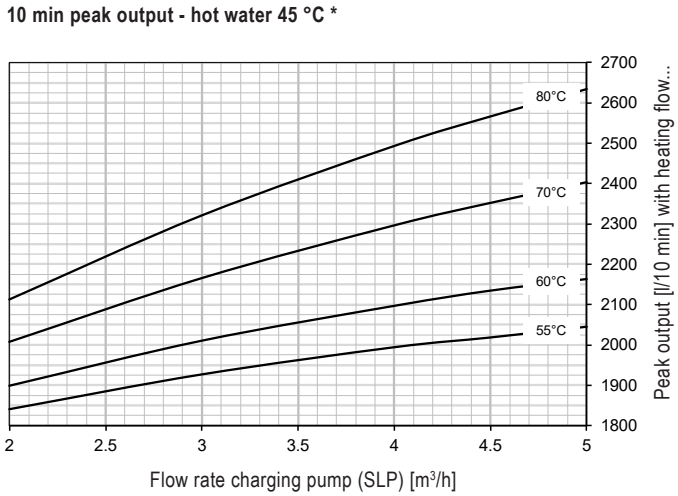

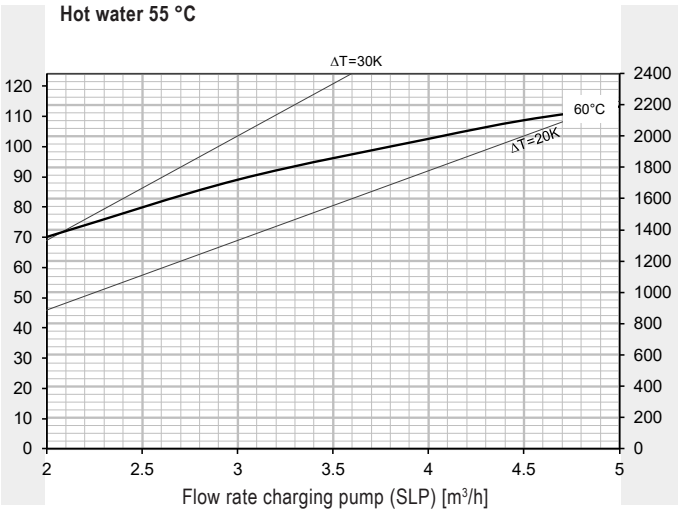

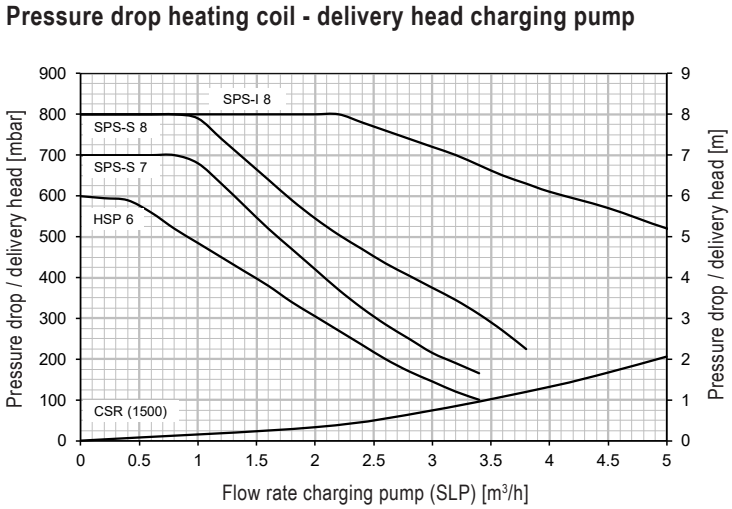

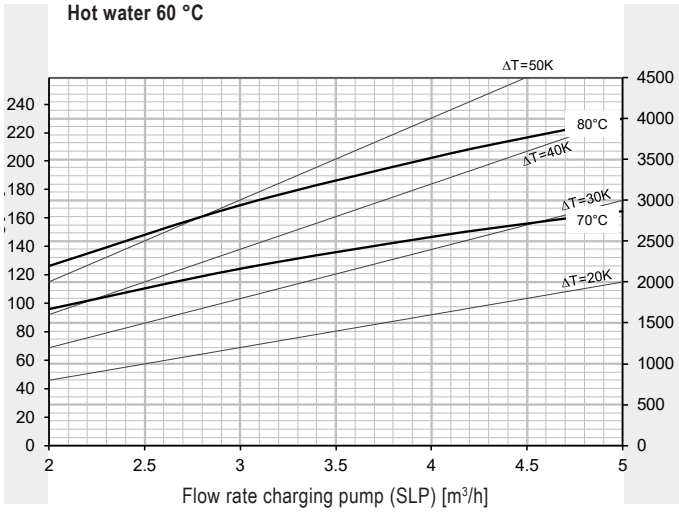

* Calorifier heated to 60 °C

CombiVal CSR (2000)

Hot water output
Continuous output

Reading example
see engineering

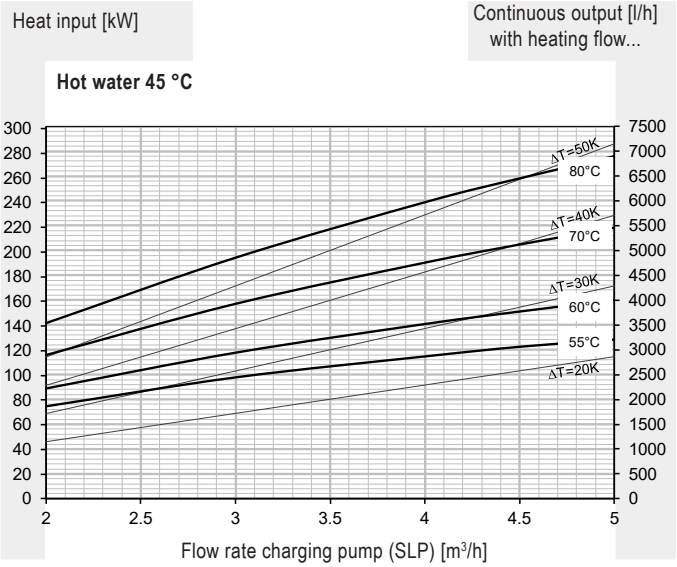

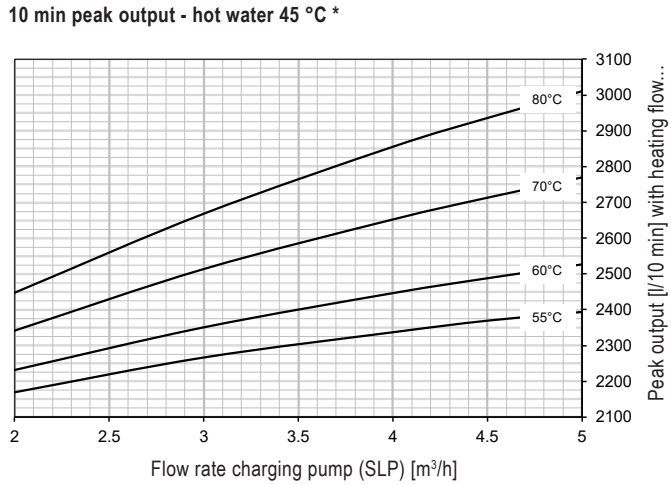

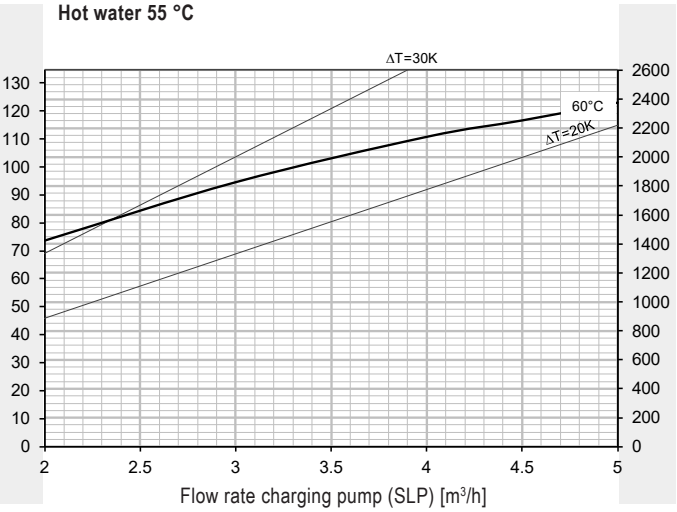

Pressure drop heating coil - delivery head charging pump

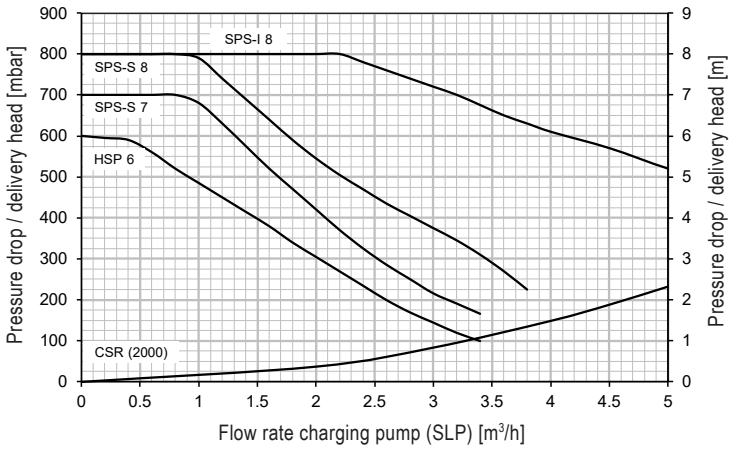

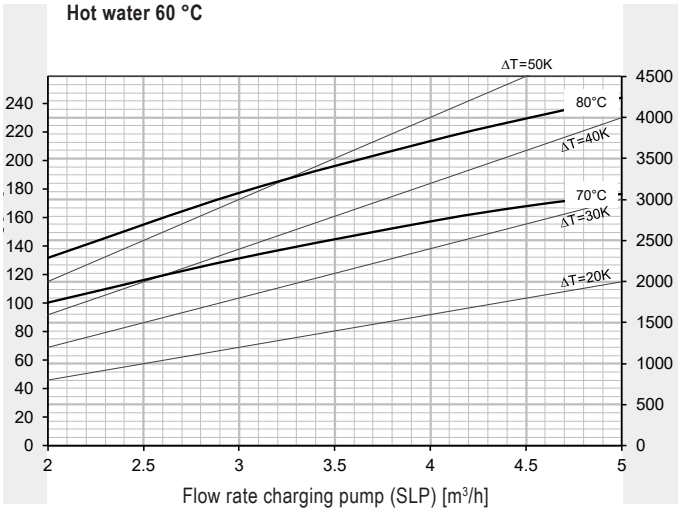

* Calorifier heated to 60 °C

CombiVal CSR (300-500)
(Dimensions in mm)

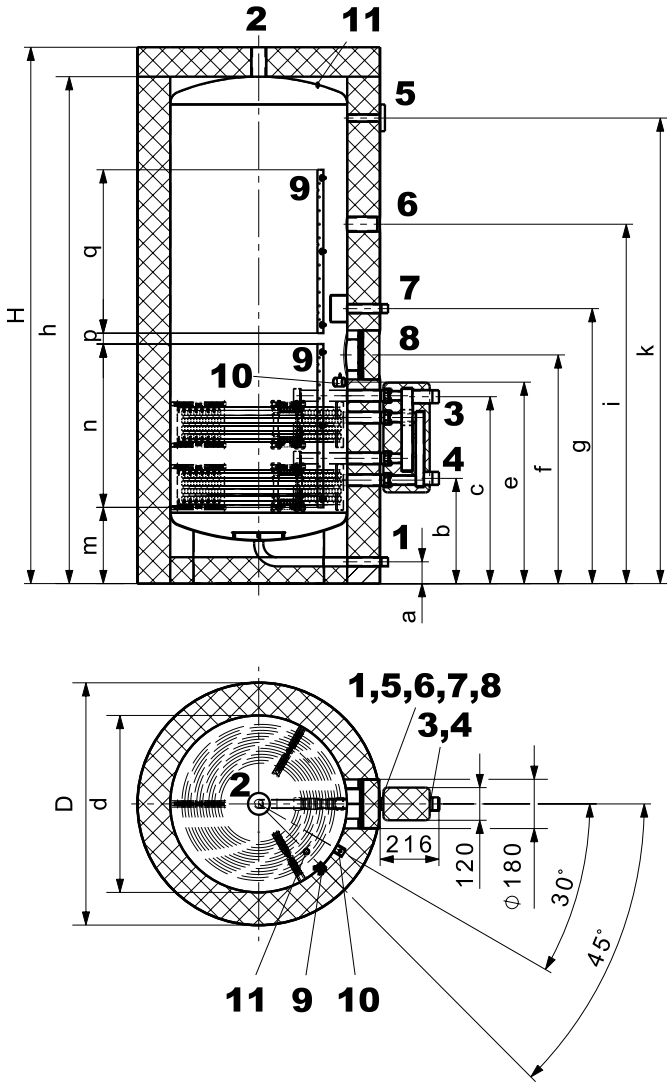

CombiVal CSR (800-2000)

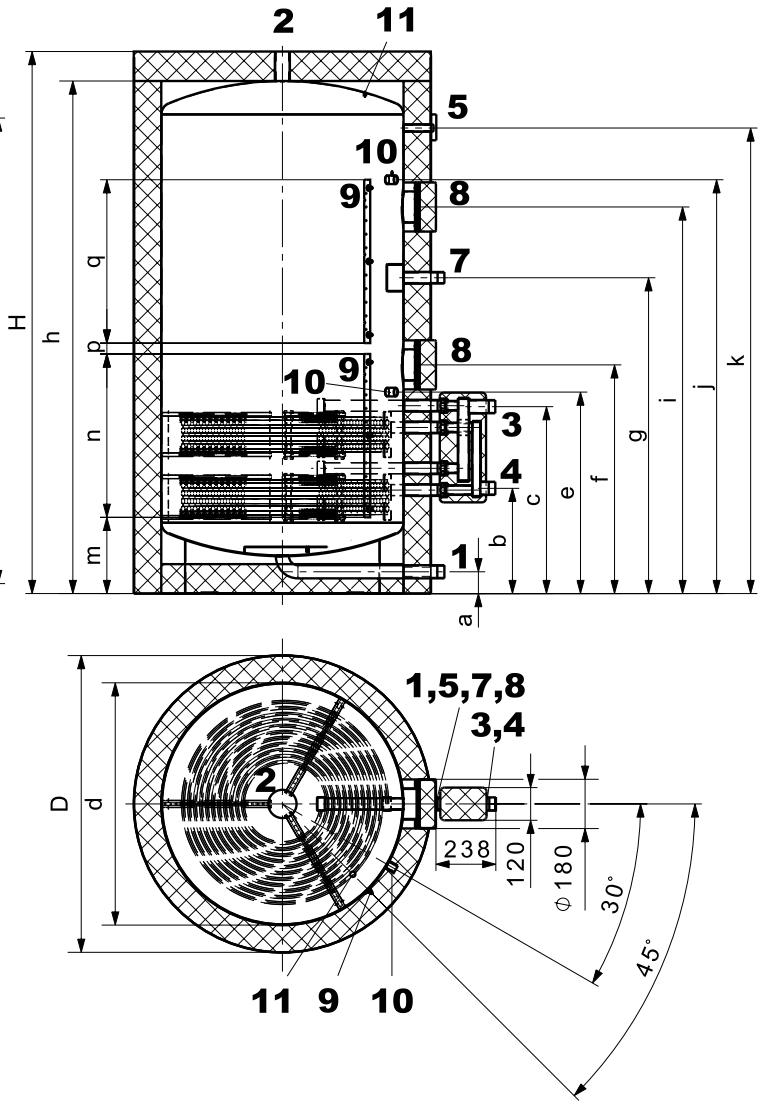

1	Cold water	type (300-500)	G 1″ (ET)
		type (800-2000)	G 1½″ (ET)
2	Hot water		Rp 1½″ (IT)
3	Flow heating		R 1½″ (ET)
4	Return heating		R 1½″ (ET)
5	Sleeve with mounted immersion sleeve and thermometer (immersion sleeve: L = 200, inner Ø = 8 mm)		Rp ½″ (IT)
6	Connection for screw-in electric heating element		Rp 1½″ (IT)
7	Circulation	type (300-500)	G 1″ (ET)
		type (800-1250)	G 1¼″ (ET)
		type (1500,2000)	G 1½″ (ET)
8	Hand-hole flange (flange-mounted electric heating element) ø 180/110 mm, pitch circle ø 150 mm, 8 x M10		
9	Sensor terminal bar 600 x 30 mm		
10	Sleeve with grounding bolt for impressed current anode (perforated thermal insulation)		Rp ¾″ (IT)
		type (300-800)	1 x
		type (1000-2000)	2 x
	Attention: observe the installation length		
11	Equipotential bonding		

Deviations possible as a result of manufacturing tolerances. Dimensions +/- 10 mm

CombiVal type CSR	D	d	H	a	b	c	e	f	g	i	j	k	m	n	p	q	Tilting dimension
(300)	740	500	1949	80	380	690	740	840	1010	1320	-	1710	310	540	100	540	2085
(400)	840	600	1885	80	380	690	740	840	1010	1320	-	1630	310	540	100	540	2064
(500)	890	650	1970	80	380	690	740	840	1010	1320	-	1710	310	540	100	540	2162
(800)	990	790	1991	80	380	690	740	840	1160	1420	-	1710	310	540	100	540	2224
(1000)	1090	890	1991	80	380	690	740	840	1160	1420	1520	1710	310	540	100	540	2270
(1250)	1190	950	1997	80	380	690	740	840	1160	1420	1520	1710	310	540	100	540	2325
(1500)	1340	1100	2012	80	380	690	740	840	1160	1420	1520	1710	310	540	100	540	2417
(2000)	1440	1200	2046	80	380	690	740	840	1160	1420	1520	1710	310	540	100	540	2502

Hoval calorifier MultiVal CRR (500-1000)

- Calorifier made of stainless steel
- Thermal insulation made of polyester fleece with patented aluminium sealing bracket. Outer casing made of polypropylene, red coloured
  (500,800) 2-part
  (1000) 3-part
- MultiVal CRR (500)
  1½″ sleeve for the installation of a screw-in electric heating element
- MultiVal CRR (800,1000)
  Flange above as additional cleaning flange (Swiss SVGW regulation) or for the installation of a flange-mounted electric heating element
- Flange below as cleaning flange or for installation of a flange-mounted electric heating element
- With thermometer
- With immersion sleeve
- Two terminal strips for contact sensors
- 2 flat section coils made ofstainless steel, built in
  - below for the alternative use as flat register at (800,1000)
  - above for supplemental heating with oil, gas or wood boiler
- Connection cable for equipotential bonding, permanently mounted
- Observe limit values for chloride content in domestic water - see “Engineering”.

Delivery
- Calorifier and thermal insulation completely installed (can be removed for installation)

On request
- Screw-in electric heating element
- Flange-mounted electric heating element for upper flange
- Flange cover with sleeve to the lower flange for the installation of a screw-in electric heating element
- Correx® impressed current anode set

Range

MultiVal type	
CRR	(500)
CRR	(800)
CRR	(1000)

Screw-in electric heating element

Type EP 2.5 to EP 5
- Made of Incoloy® alloy 825
- Heat input 2.35 to 4.9 kW
- Incl. temperature control and safety temperature limiter
- Connection:
  EP 2.5: 3 x 400 V (1 x 230 V)
  EP 3.5 and EP 5: 3 x 400 V
- Not suitable for exclusively electric heating

Delivery
- Delivered separately packed

On site
- Installation of the electric heating element

Flange-mounted electric heating elements

Type EFHK-C 4 to EFHK-C 9
- Made of Incoloy® alloy 825
- Heat output 4.0 to 9.0 kW, according to the regulation of the current supplier
- With temperature regulation and safety temperature limiter
- Connection 3 x 400 V
- Not suitable for exclusively electric heating

Delivery
- Delivered separately packed

On site
Mounting of thermal insulation

Calorifier

MultiVal CRR (500-1000)

With integrated flat section coils made of stainless steel.
MultiVal CRR (500-1000) thermal insulation fully installed.

MultiVal CRR type	Volume dm³	Heating surface top m²	Heating surface bottom m²	Part No.
(500)	544	1.28	1.70	7014 794
(800)	818	1.28	2.63	7014 795
(1000)	1042	1.28	2.63	7014 796

Notice
The connections must only be designed in stainless steel; if not, suitable isolating or bridging connectors (or MEPLA pipe transition pieces) must be used.
When using insulating or bridging connectors (galvanic isolation), the earth cable attached to the calorifier must not be connected. When using galvanised circulation pipes, a backwash filter must be installed.

Electric heating elements
see chapter “Electric heating elements”

Accessories

Kit Correx® impressed current anode UP1.9-924-L395/1 — 6031 813
for long-term corrosion protection for installation in the stainless steel calorifier
with reduction R 1½″ - Rp ¾″
Installation length: 395 mm
Connection cable length: 1 x 3500 mm
1 Correx® impressed current anode
(up to 800 l)

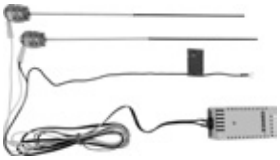

Kit Correx® impressed current anode UP1.9-924-L395/2 — 6052 439
for long-term corrosion protection for installation in the stainless steel calorifier
Installation length: 395 mm
Connection cable length: 2 x 2000 mm
2 Correx® impressed current anodes
(from 1000 l)

		Part No.
	**Immersion sensor TF/2P/5/6T, L = 5.0 m with plug** for TopTronic® E controller modules/ module expansions with exception of basic module district heating/fresh water or basic module district heating com cable length: 5 m with plug sensor sleeve diameter: 6 x 50 mm dewpoint-proof operating temperature: -20…105 °C protection class: IP67	2056 788
	**Immersion sensor TF/2P/5/6T, L = 5.0 m** for TopTronic® E controller modules/ module expansions with exception of basic module district heating/fresh water or basic module district heating com, cable length: 5 m without plug sensor sleeve diameter: 6 x 50 mm, dewpoint-proof, operating temperature: -20…105 °C, protection class: IP67	2055 888
	**Immersion sensor TF/12N/2.5/6T, L = 2.5 m** for gas boiler with RS-OT Cable length: 2.5 m Sensor sleeve diameter: 6 x 50 mm, dewpoint-proof, operating temperature: -20…105 °C, protection class: IP67	2056 791
At TopTronic® E, immersion sensor is included in the boiler controller or in the heating controller set.		
	**Calorifier thermostat control TW 12** Universal thermostat controller for thermostatic pump charge demand, setting in casing, visible from outside. 15-95 °C, switching difference 6 K, capillar length 700 mm incl. fastening material for Hoval calorifier, can be used with integrated immersion sleeve	6010 080
Thermal water mixer see “Various system components”		

Services

Commissioning
Commissioning by works service or Hoval trained authorised serviceman/company is condition for warranty.

For commissioning and other services please contact your Hoval sales office.

MultiVal CRR (500-1000)

Type		(500)	(800)	(1000)
• Contenance	dm^3	544	818	1042
• Contenance (registre de chauffage supérieur)	dm^3	220	345	405
• Pression de service/Pression d'essai SSIGE	bar	6/12	6/12	6/12
• Température de service maximale	°C	95	95	95
• Isolation thermique en fibres polyester	mm	120	100	100
• Isolation thermique λ	W/mK	0.035	0.035	0.035
• Classement au feu		B2	B2	B2
• Perte de maintien d'eau chaude à 65 °C	W	80	136	142
• Poids de transport	kg	145	205	219
• Valeur U	W/m^2K	0.259	0.437	0.360
Registre de chauffage inférieur (monté à demeure)				
• Surface de chauffe	m^2	1.70	2.63	2.63
• Eau de chauffage	dm^3	5.10	7.40	7.40
• Perte de charge [1] d'eau	coeff. z	15.50	24.00	24.00
• Perte de charge [1] d'eau/glycol 50 %	coeff. z	20.93	32.40	32.40
• Pression de service/Pression d'essai SSIGE	bar	3/6	3/6	3/6
• Température de service maximale	°C	95	95	95
• Pour capteurs plans [2] jusqu'à	m^2	8	12	16
Registre de chauffage supérieur (monté à demeure)				
• Surface de chauffe	m^2	1.28	1.28	1.28
• Eau de chauffage	dm^3	4.10	4.10	4.10
• Perte de charge [1]	coeff. z	11.65	11.65	11.65
• Pression de service/Pression d'essai SSIGE	bar	3/6	3/6	3/6
• Température de service maximale	°C	95	95	95
• Dimensions			voir Dimensions	

[1] Perte de charge registre de chauffage en mbar = débit volumique $(m^3/h)^2$ x z (1 mbar = 0.1 kPa)

[2] Surface des capteurs. Rapportée à la surface de chauffe de l'échangeur de chaleur.

Performance figure

Selection of the storage tank type
at a hot water temperature of 45 °C

Reading example
see engineering

	Comfort [1]			Standard [2]		
T >	60 °C	70 °C	80 °C	60 °C	70 °C	80 °C
NL v						
1						
2						
3						
4						
5						
6						
7				500		
8	500					
9						
10		500			500	
11						
12						
13	800		500			
14	1000					500
15				800		
16		800				
17				1000		
18		1000				
19					800	
20						
21						
22			800		1000	
23						
24			1000			
25						
26						
27						
28						800
29						
30						1000
31						
32						
33						
34						
35						
36						
37						
38						
39						
40						
41						
42						
43						
44						
45						
46						
47						
48						
49						
50						

	Comfort [1]			Standard [2]		
T >	60 °C	70 °C	80 °C	60 °C	70 °C	80 °C
NL v						
51						
52						
53						
54						
55						
56						
57						
58						
59						
60						
61						
62						
63						
64						
65						
66						
67						
68						
69						
70						
71						
72						
73						
74						
75						
76						
77						
78						
79						
80						
81						
82						
83						
84						
85						
86						
87						
88						
89						
90						
91						
92						
93						
94						
95						
96						
97						
98						
99						
100						
> 100						

T = heating flow
NL = performance figure
and permanently reheated with the heat generator (standard flat: 1 bathroom - 4 rooms - 3.5 persons)
[1] Calculation with simultaneity factor according to DIN 4708 (preferred for Switzerland)
[2] Calculation with simultaneity factor according to Dresden Technical University

10 min peak output/N number with domestic hot water 45 °C
according to DIN 4708 (Comfort) and Dresden Technical University (Standard)

Reading example
see Engineering

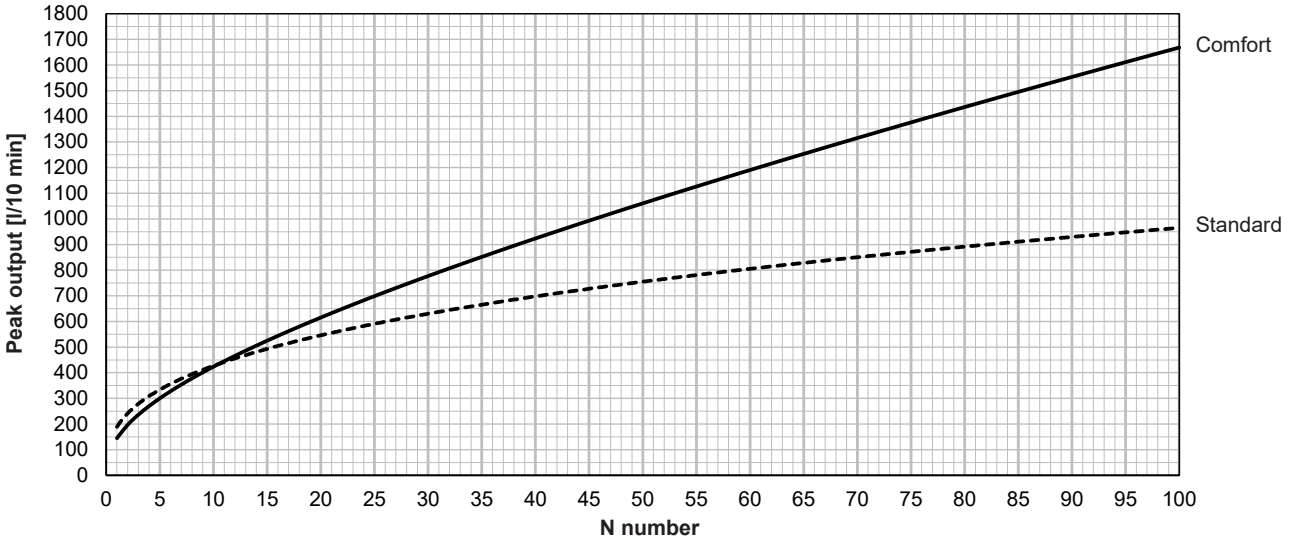

MultiVal CRR (500)

Hot water output
Continuous output

Reading example
see engineering

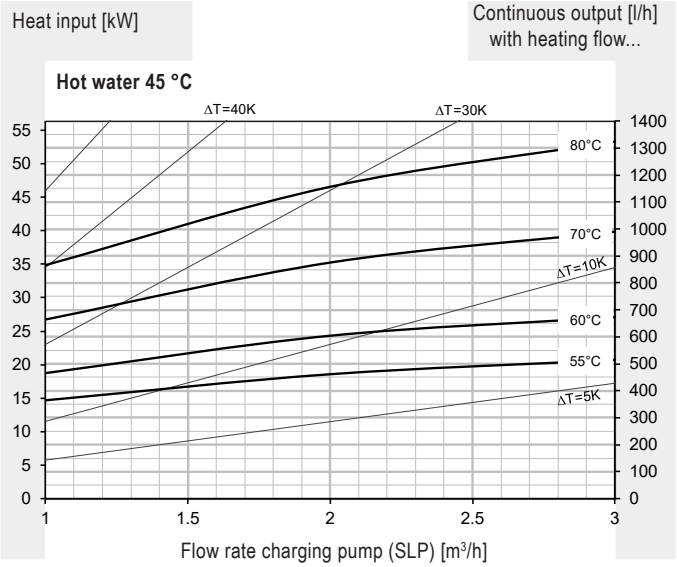

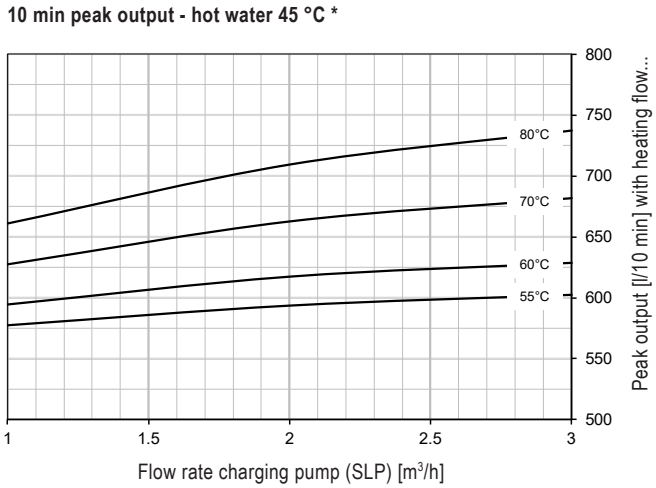

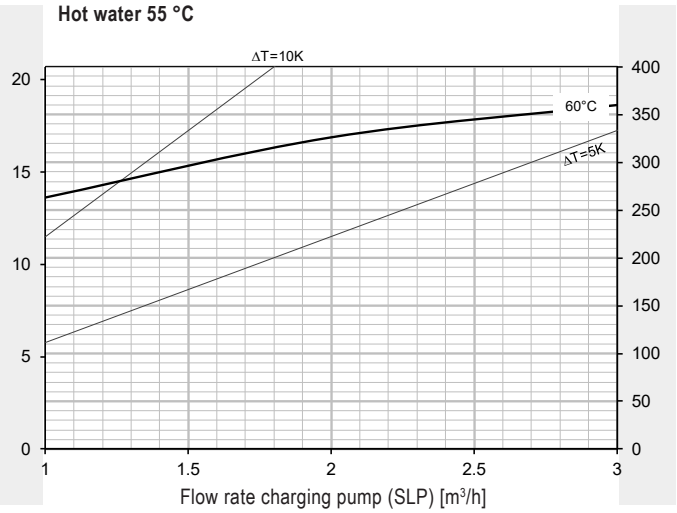

Pressure drop heating coil - delivery head charging pump

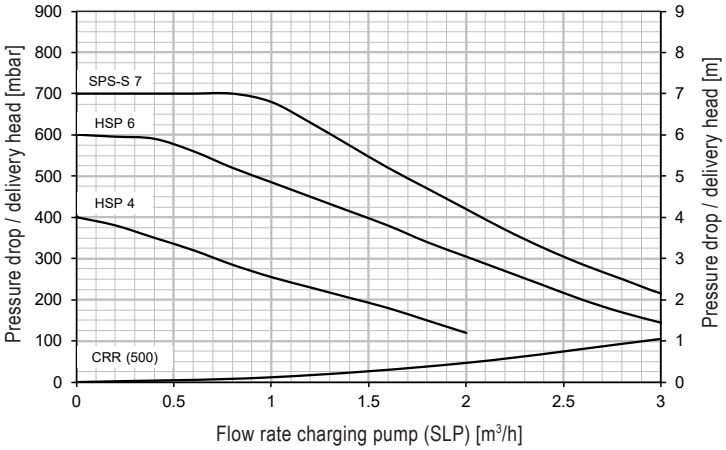

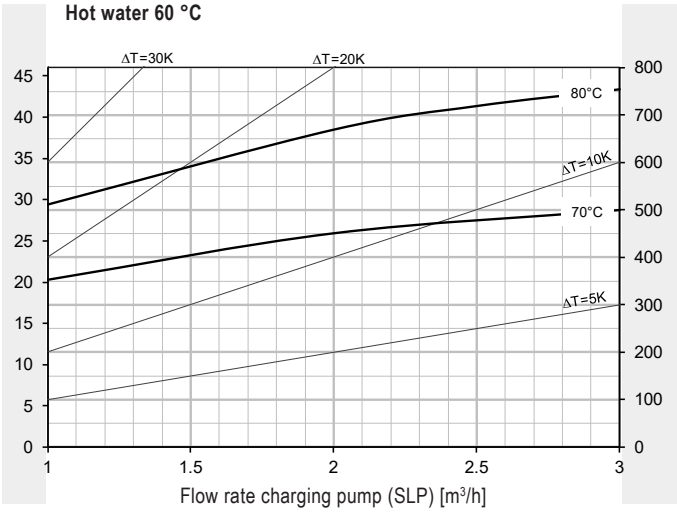

* Calorifier heated to 60 °C

MultiVal CRR (800)

Hot water output
Continuous output

Reading example
see engineering

Heat input [kW]

Continuous output [l/h] with heating flow...

Hot water 45 °C

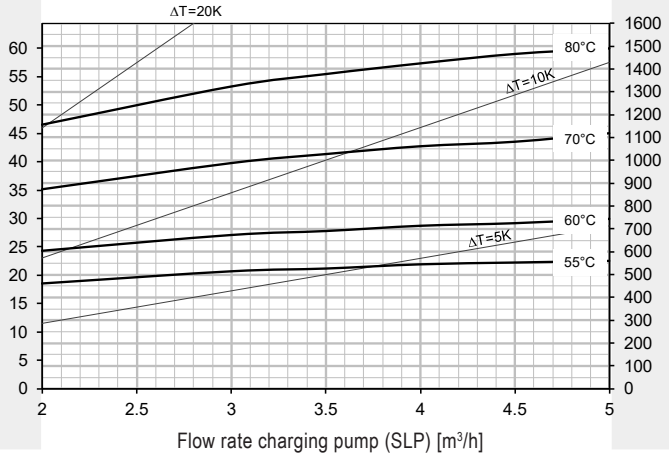

10 min peak output - hot water 45 °C *

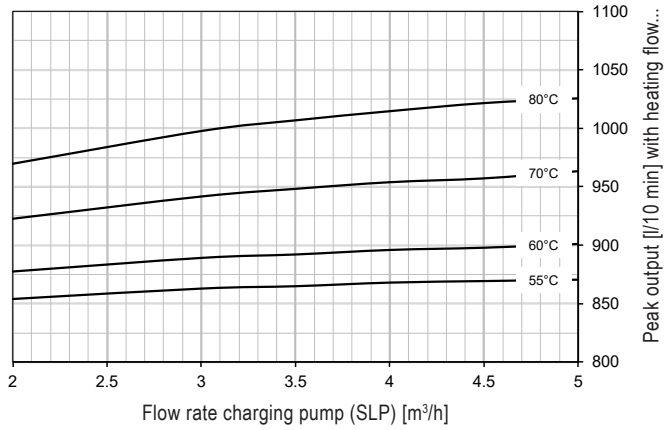

Hot water 55 °C

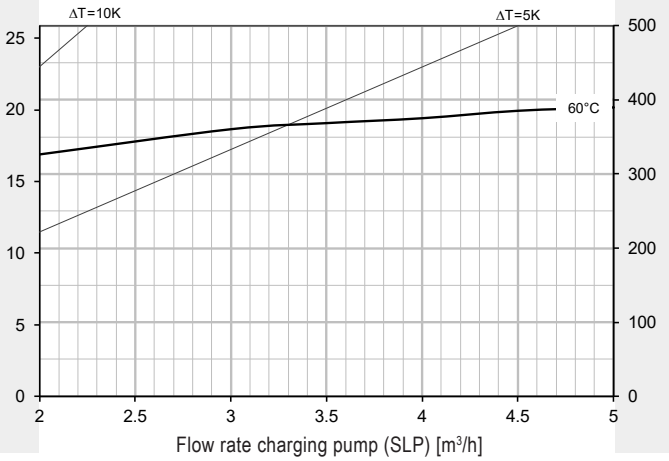

Pressure drop heating coil - delivery head charging pump

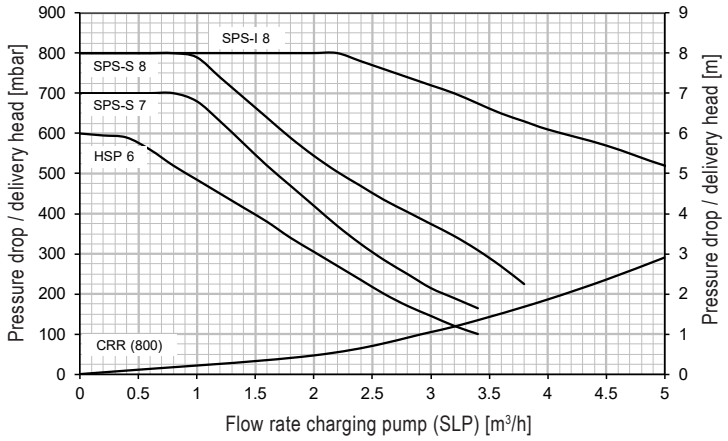

Hot water 60 °C

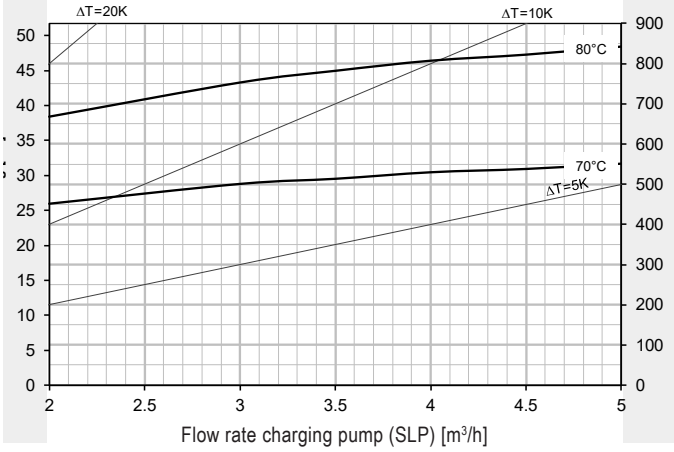

* Calorifier heated to 60 °C

MultiVal CRR (1000)

Hot water output
Continuous output

Reading example
see engineering

Heat input [kW]

Continuous output [l/h] with heating flow...

Hot water 45 °C

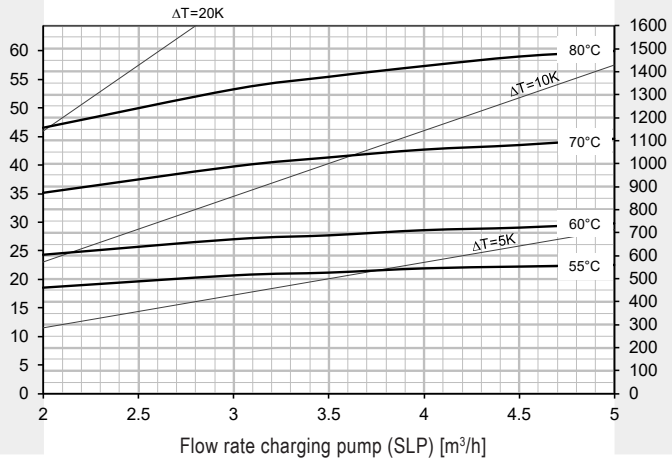

10 min peak output - hot water 45 °C *

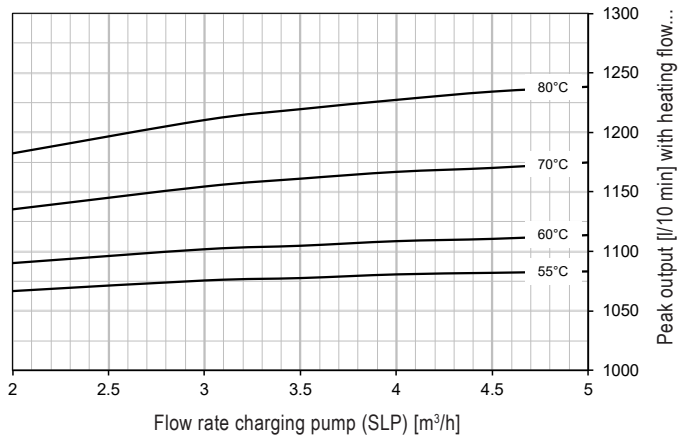

Hot water 55 °C

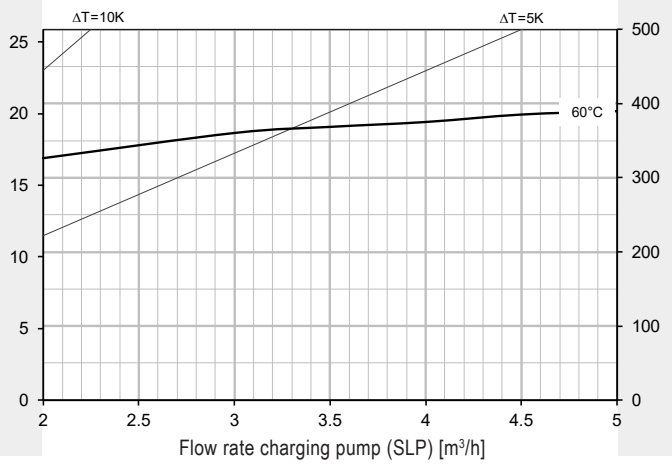

Pressure drop heating coil - delivery head charging pump

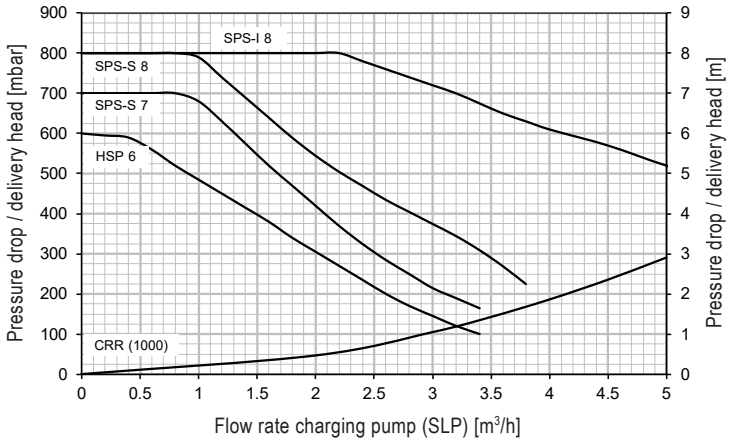

Hot water 60 °C

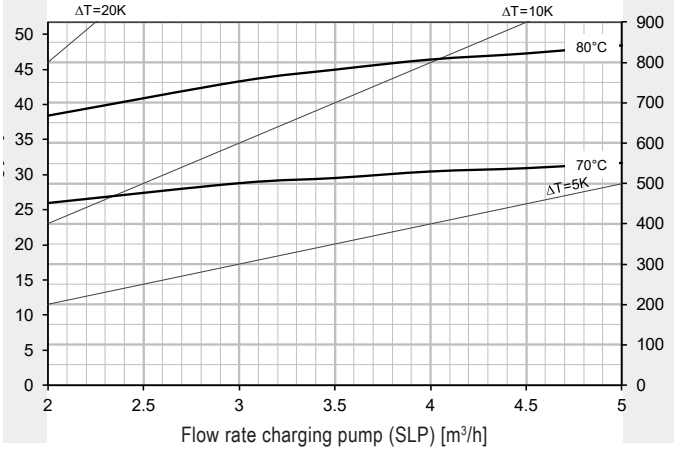

* Calorifier heated to 60 °C

MultiVal CRR (500)
(Dimensions in mm)

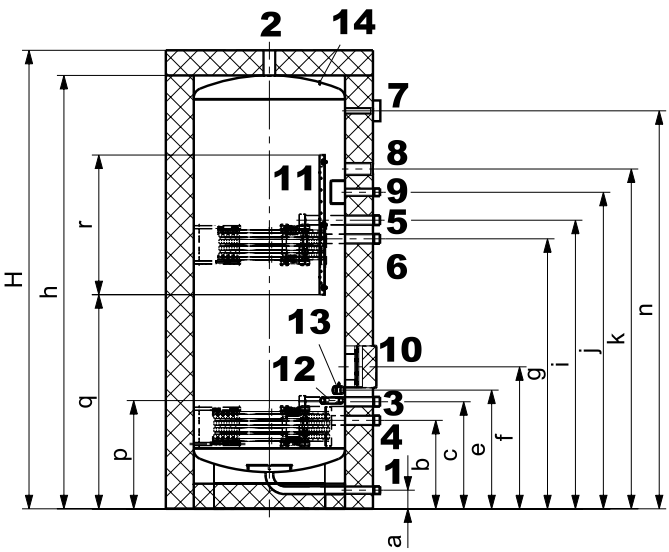

MultiVal CRR (800,1000)

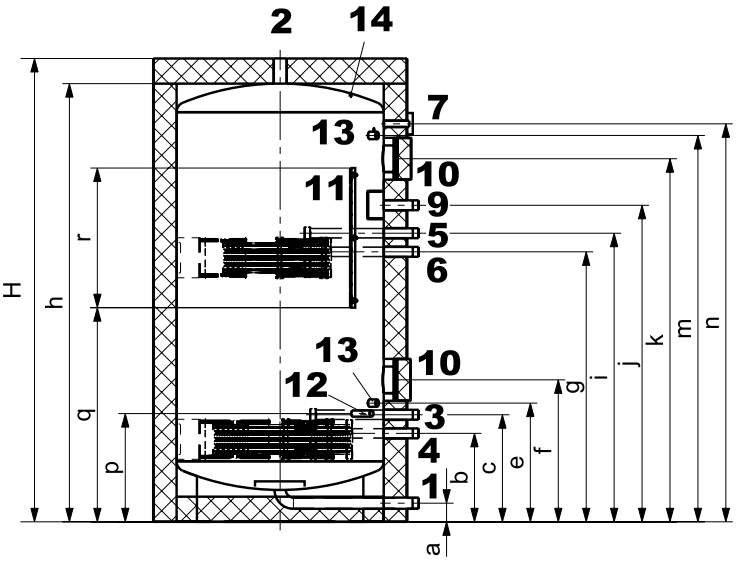

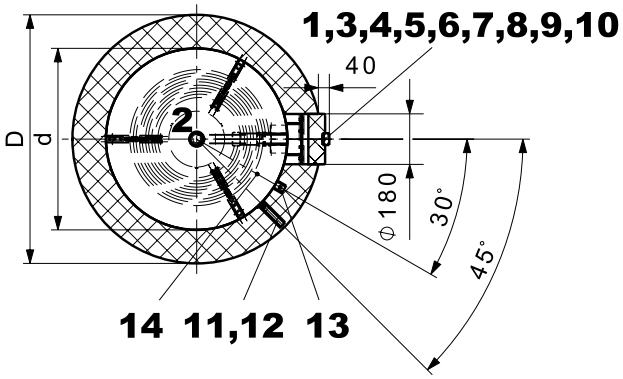

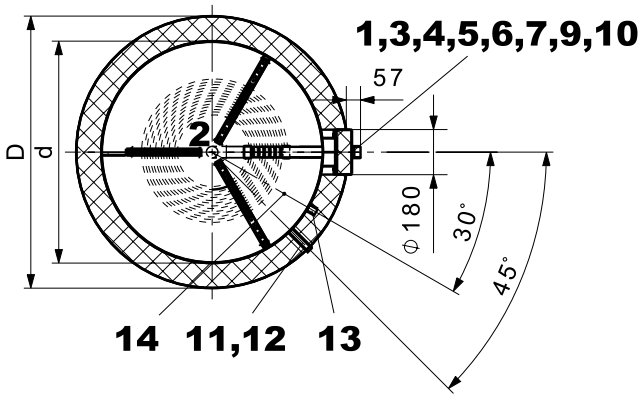

1	Cold water	type (500)	G 1″ (ET)
		type (800,1000)	G 1½″ (ET)
2	Hot water		Rp 1½″ (IT)
3	Flow solar circuit		G 1¼″ (ET)
4	Return solar circuit		G 1¼″ (ET)
5	Flow re-heating		G 1¼″ (ET)
6	Return re-heating		G 1¼″ (ET)
7	Sleeve with mounted immersion sleeve and thermometer (immersion sleeve: L = 200, inner Ø = 8 mm)		Rp ½″ (IT)
8	Connection for screw-in electric heating element		Rp 1½″ (IT)
9	Circulation	type (500)	G 1″ (ET)
		type (800,1000)	G 1¼″ (ET)

10	Hand-hole flange (flange-mounted electric heating element) ø 180/110 mm, pitch circle ø 150 mm, 8 x M10		
11	Sensor terminal bar 600 x 30 mm		
12	Sleeve with mounted immersion sleeve for sensor, thermostat (immersion sleeve: L = 200, inner Ø = 8 mm)		Rp ½″ (IT)
13	Sleeve with grounding bolt for impressed current anode (perforated thermal insulation)		Rp ¾″ (IT)
		type (500)	1 x
		type (1000)	2 x
	Attention: observe the installation length		
14	Equipotential bonding		

Deviations possible as a result of manufacturing tolerances. Dimensions +/- 10 mm

MultiVal type	D	d	H	h	a	b	c	e	f	g	i	j	k	m	n	p	q	r	Tilting dimension
CRR (500)	890	650	1970	1862	80	380	460	510	610	1160	1240	1360	1460	-	1710	465	950	540	2162
CRR (800)	990	790	1991	1883	80	380	460	510	610	1160	1240	1360	1560	-	1710	465	950	540	2224
CRR (1000)	1090	890	1991	1883	80	380	460	510	610	1160	1240	1360	1560	1660	1710	465	950	540	2270

Hoval calorifier
MultiVal CSRR (500-2000)

- Calorifier made of stainless steel
- Thermal insulation made of polyester fleece with patented aluminium sealing bracket. Outer casing made of polypropylene, red coloured
  (500,800) 2-part
  (1000-2000) 3-part
- MultiVal CSRR (500)
  1 ½″ sleeve for the installation of a screw-in electric heating element
- MultiVal CSRR (800-2000)
  Flange above as additional cleaning flange (Swiss SVGW regulation) or for the installation of a flange-mounted electric heating element or of a screw-in electric heating element by means of flange cover with 1 ½″ sleeve
- Flange below as cleaning flange or for the installation of a flange-mounted electric heating element or of a screw-in electric heating element by means of flange cover with 1 ½″ sleeve
- Distributor bar for parallel connection of the coils
- With thermometer
- Terminal bar for contact sensor
- With immersion sleeve
- 2 flat section coils made of stainless steel, built in
  - at the bottom: flat section coil for solar use
  - at the top: flat section coil for heating with heat pumps
- Connection cable for equipotential bonding, permanently mounted
- Observe limit values for chloride content in domestic water - see “Engineering”.

Delivery
- MultiVal CSRR (500-1000)
  Calorifier and thermal insulation completely installed (can be removed for installation), distributor bar delivered in separate packaging
- MultiVal CSRR (1500-2000)
  Calorifier, thermal insulation and distributor bar delivered in separate packaging

On request
- Screw-in electric heating element
- Flange cover with sleeve for flange below with sleeve to flange below for the installation of a screw-in electric heating element
- Correx® impressed current anode set

On site
- MultiVal CSRR (1500-2000)
  Installation of the thermal insulation, distributor bar

Range

MultiVal type	
CSRR	(500)
CSRR	(800)
CSRR	(1000)
CSRR	(1500)
CSRR	(2000)

Screw-in electric heating element
Type EP 2.5 to EP 5
- Made of Incoloy® alloy 825
- Heat input 2.35 to 4.9 kW
- Including temperature control and safety temperature limiter
- Connection:
  EP 2.5: 3 x 400 V (1 x 230 V)
  EP 3.5 and EP 5: 3 x 400 V
- Not suitable for exclusively electric heating

Delivery
- Delivered separately packed

On site
- Installation of the electric heating element

Flange-mounted electric heating elements
Type EFHK-C 4 to EFHK-C 9
- Made of Incoloy® alloy 825
- Heat output 4.0 to 9.0 kW, according to the rules of the current supplier
- With temperature regulation and safety temperature limiter
- Connection 3 x 400 V
- Not suitable for exclusively electric heating

Delivery
- Delivered separately packed

On site
- Mounting of thermal insulation

Calorifier

MultiVal CSRR (500-2000)

With 2 integrated flat section coils made of stainless steel, incl. distributor bar for parallel connection of the coils (separately packed)
MultiVal CSRR (540-1000) fully mounted.
MultiVal CSRR (1500-2000) calorifier and thermal insulation delivered separately packed.

MultiVal CSRR type	Volume dm³	Heating surface top m²	Heating surface bottom m²	Part No.
(500)	544	5.20	1.70	7016 768
(800)	818	7.40	2.63	7016 769
(1000)	1042	10.00	2.63	7016 770
(1500)	1625	11.30	5.00	7016 771
(2000)	1958	11.30	5.00	7016 772

Notice
The connections must only be designed in stainless steel; if not, suitable isolating or bridging connectors (or MEPLA pipe transition pieces) must be used.
When using insulating or bridging connectors (galvanic isolation), the earth cable attached to the calorifier must not be connected. When using galvanised circulation pipes, a backwash filter must be installed.

Electric heating elements
see chapter “Electric heating elements”

Accessories

Kit Correx® impressed current anode UP1.9-924-L395/1
for long-term corrosion protection for installation in the stainless steel calorifier
with reduction R 1½″ - Rp ¾″
Installation length: 395 mm
Connection cable length: 1 x 3500 mm
1 Correx® impressed current anode
(up to 800 l)

6031 813

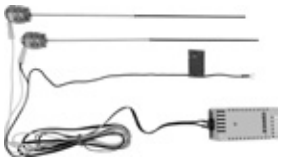

Kit Correx® impressed current anode UP1.9-924-L395/2
for long-term corrosion protection for installation in the stainless steel calorifier
Installation length: 395 mm
Connection cable length: 2 x 2000 mm
2 Correx® impressed current anodes
(from 1000 l)

6052 439

		Part No.
	**Immersion sensor TF/2P/5/6T, L = 5.0 m with plug** for TopTronic® E controller modules/ module expansions with exception of basic module district heating/fresh water or basic module district heating com cable length: 5 m with plug sensor sleeve diameter: 6 x 50 mm dewpoint-proof operating temperature: -20…105 °C protection class: IP67	2056 788
	**Immersion sensor TF/2P/5/6T, L = 5.0 m** for TopTronic® E controller modules/ module expansions with exception of basic module district heating/fresh water or basic module district heating com, cable length: 5 m without plug sensor sleeve diameter: 6 x 50 mm, dewpoint-proof, operating temperature: -20…105 °C, protection class: IP67	2055 888
	**Immersion sensor TF/12N/2.5/6T, L = 2.5 m** for gas boiler with RS-OT Cable length: 2.5 m Sensor sleeve diameter: 6 x 50 mm, dewpoint-proof, operating temperature: -20…105 °C, protection class: IP67	2056 791
At TopTronic® E, immersion sensor is included in the boiler controller or in the heating controller set.		
	**Calorifier thermostat control TW 12** Universal thermostat controller for thermostatic pump charge demand, setting in casing, visible from outside. 15-95 °C, switching difference 6 K, capillar length 700 mm incl. fastening material for Hoval calorifier, can be used with integrated immersion sleeve	6010 080
Thermal water mixer see “Various system components”		

Services

Commissioning
Commissioning by works service or Hoval trained authorised serviceman/company is condition for warranty.

For commissioning and other services please contact your Hoval sales office.

MultiVal CSRR (500-2000)

Type		(500)	(800)	(1000)	(1500)	(2000)
• Contenance	dm^3	544	818	1042	1625	1958
• Contenance (registre de chauffage supérieur)	dm^3	375	530	650	1023	1368
• Pression de service/Pression d'essai SSIGE	bar	6/12	6/12	6/12	6/12	6/12
• Température de service maximale	°C	95	95	95	95	95
• Isolation thermique en fibres polyester	mm	120	100	100	120	120
• Isolation thermique λ	W/mK	0.035	0.035	0.035	0.035	0.035
• Classement au feu		B2	B2	B2	B2	B2
• Perte de maintien d'eau chaude à 65 °C	W	80	136	142	176	180
• Poids de transport	kg	176	257	303	501	529
• Valeur U	W/m^2K	0.259	0.390	0.360	0.338	0.315
Registre de chauffage inférieur (monté à demeure)						
• Surface de chauffe	m^2	1.70	2.63	2.63	5.00	5.00
• Eau de chauffage	dm^3	5.30	7.40	7.40	13.60	13.60
• Perte de charge [1] d'eau	coeff. z	15.50	24.00	24.00	45.25	45.25
• Perte de charge [1] d'eau/glycol 50 %	coeff. z	20.93	32.40	32.40	61.09	61.09
• Pression de service/Pression d'essai SSIGE	bar	3/6	3/6	3/6	3/6	3/6
• Température de service maximale	°C	95	95	95	95	95
• Pour capteurs plans [2] jusqu'a	m^2	12	18	18	36	36
Registre de chauffage supérieur (monté à demeure)						
• Surface de chauffe	m^2	5.20	7.40	10.00	11.30	11.30
• Eau de chauffage	dm^3	13.60	19.00	25.30	28.40	28.40
• Perte de charge [1]	coeff. z	3.84	5.44	7.24	8.24	8.24
• Pression de service/Pression d'essai SSIGE	bar	3/6	3/6	3/6	3/6	3/6
• Température de service maximale	°C	95	95	95	95	95
• Dimensions				voir Dimensions		

[1] Perte de charge registre de chauffage en mbar = débit volumique $(m^3/h)^2$ x z (1 mbar = 0.1 kPa)

[2] Surface des capteurs. Rapportée à la surface de chauffe de l'échangeur de chaleur.

Performance figure

Selection of the storage tank type
at a hot water temperature of 45 °C

Reading example
see engineering

	Comfort [1]			Standard [2]		
T >	60 °C	70 °C	80 °C	60 °C	70 °C	80 °C
NL v						
1						
2						
3						
4						
5						
6						
7						
8						
9						
10						
11						
12						
13						
14						
15						
16						
17						
18	500					
19						
20						
21						
22						
23				500		
24						
25		500				
26						
27						
28						
29						
30						
31						
32						
33			500			
34						
35						
36						
37						
38	800					
39						
40						
41					500	
42						
43						
44						
45						
46						
47						
48						
49						
50						

	Comfort [1]			Standard [2]		
T >	60 °C	70 °C	80 °C	60 °C	70 °C	80 °C
NL v						
51						
52		800				500
53	1000					
54						
55						
56						
57						
58						
59						
60				800		
61						
62						
63						
64						
65						
66						
67						
68			800			
69						
70						
71		1000				
72						
73						
74						
75						
76						
77	1500					
78						
79						
80				1000		
81	2000					
82						
83						
84					800	
85						
86						
87						
88						
89						
90			1000			
91						
92						
93						
94						
95						
96						
97						
98						
99						
100						
> 100		1500	1500	1500	1000	800
		2000	2000	2000	1500	1000
					2000	1500
						2000

T = Heating flow
NL = Performance figure
Performance figure NL acc. to DIN 4708 = number of flats which can be supplied with domestic hot water when the calorifier is heated and permanently reheated with the heat generator (standard flat: 1 bathroom - 4 rooms - 3.5 persons)
[1] Calculation with simultaneity factor according to DIN 4708 (preferred for Switzerland)
[2] Calculation with simultaneity factor according to Dresden Technical University

10 min peak output/N number with domestic hot water 45 °C
according to DIN 4708 (Comfort) and Dresden Technical University (Standard)

Reading example
see Engineering

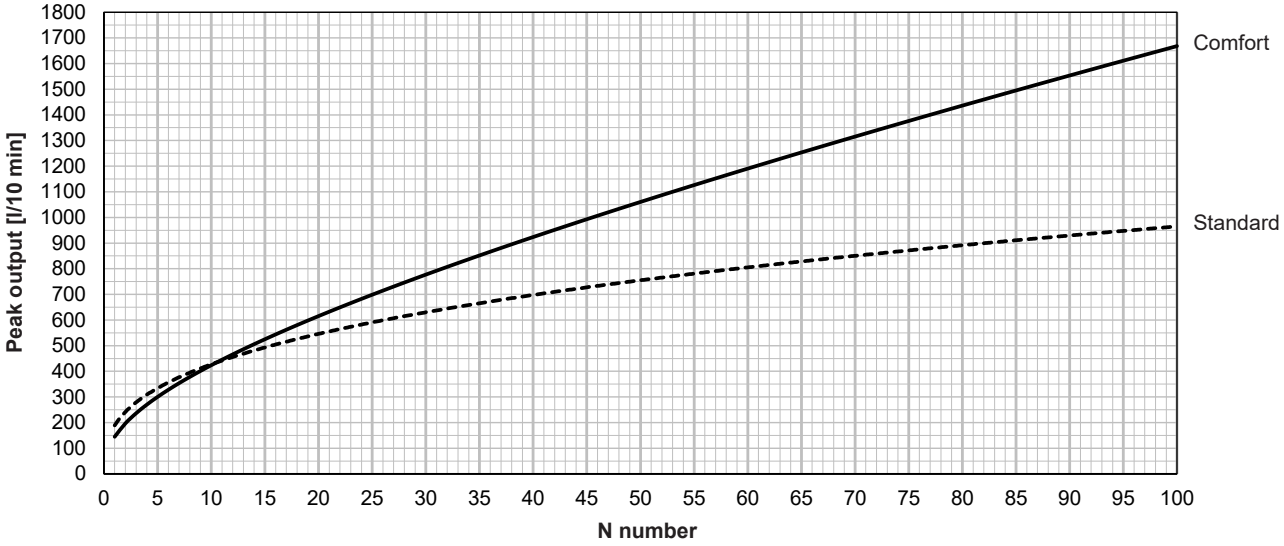

MultiVal CSRR (500)

Hot water output
Continuous output

Reading example
see engineering

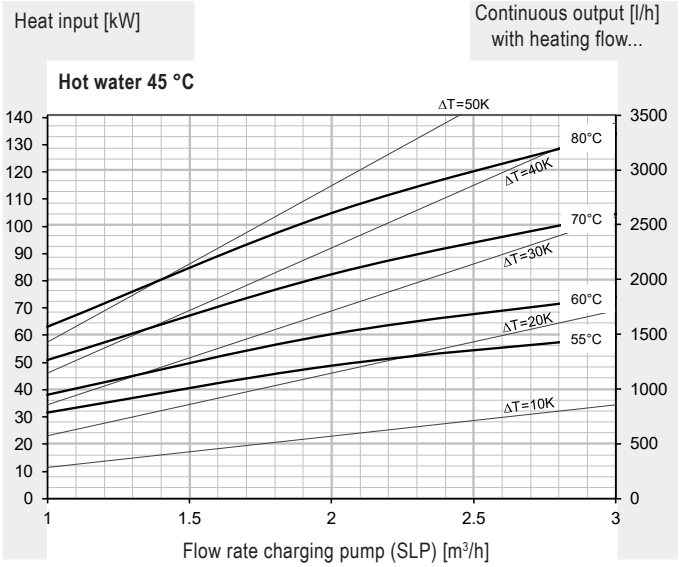

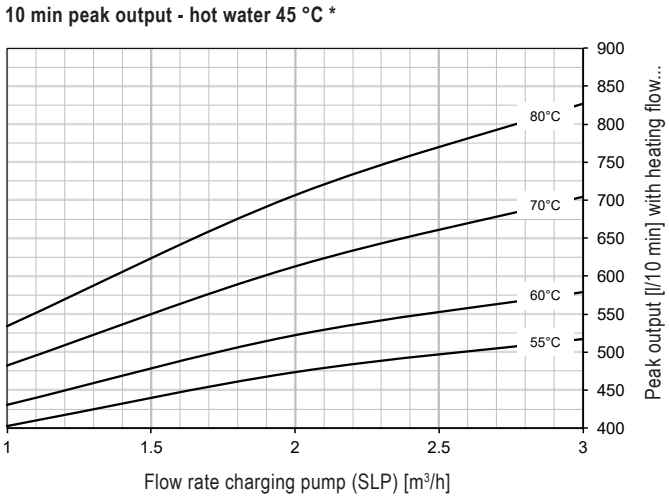

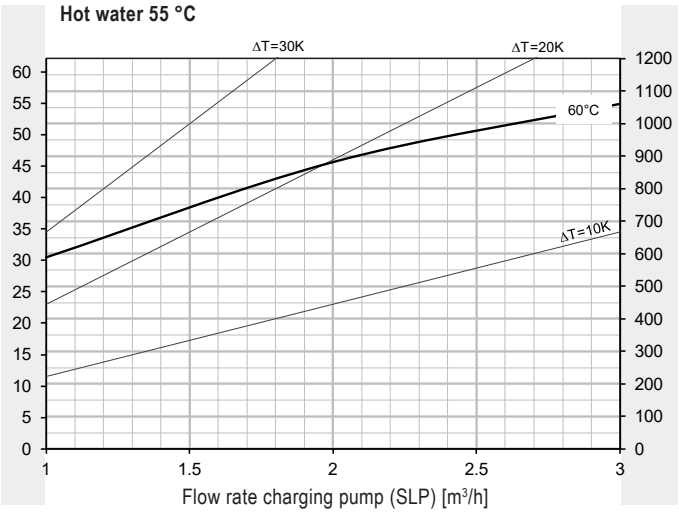

Pressure drop heating coil - delivery head charging pump

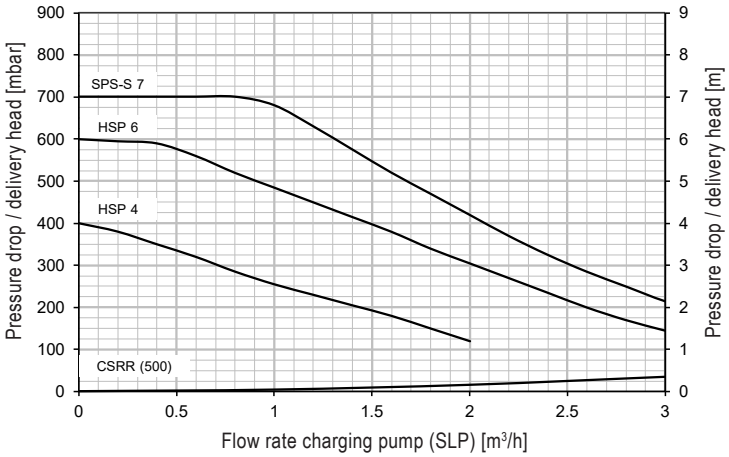

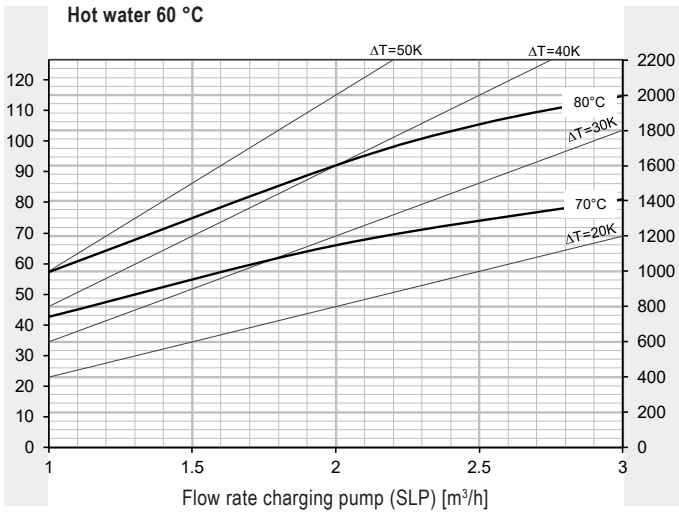

* Calorifier heated to 60 °C

MultiVal CSRR (800)

Hot water output
Continuous output

Reading example
see engineering

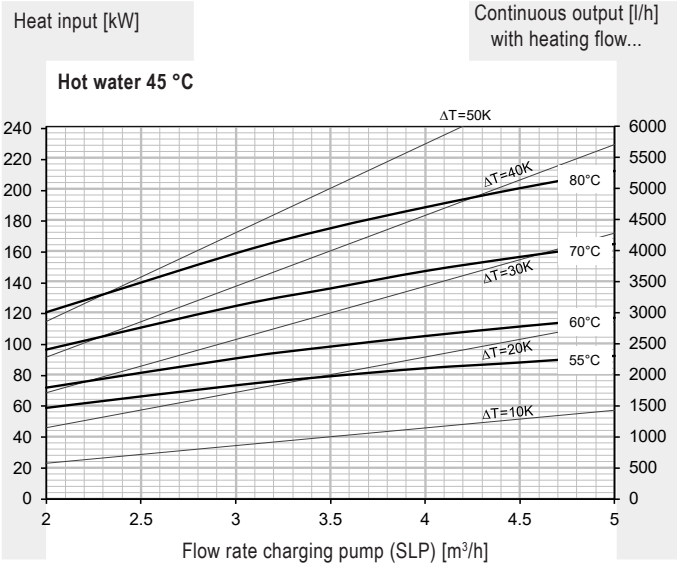

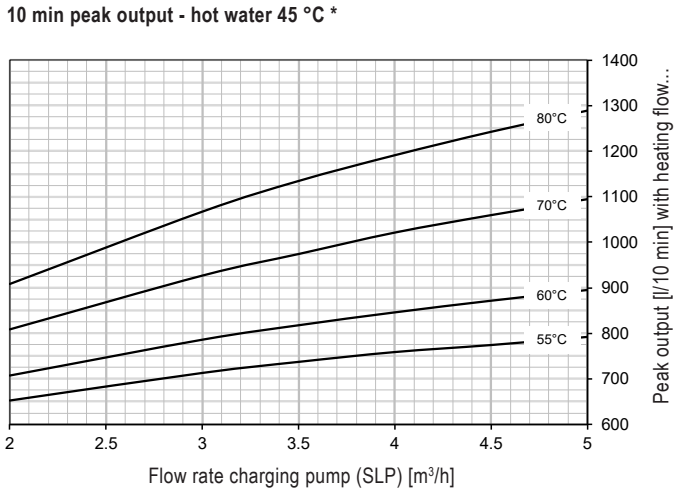

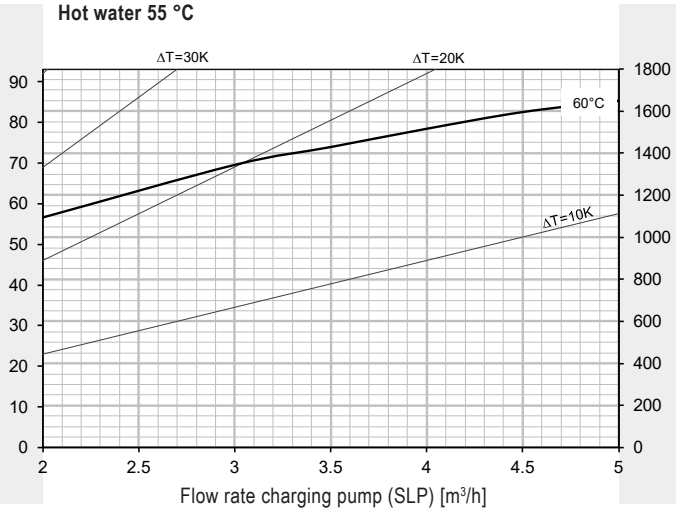

Pressure drop heating coil - delivery head charging pump

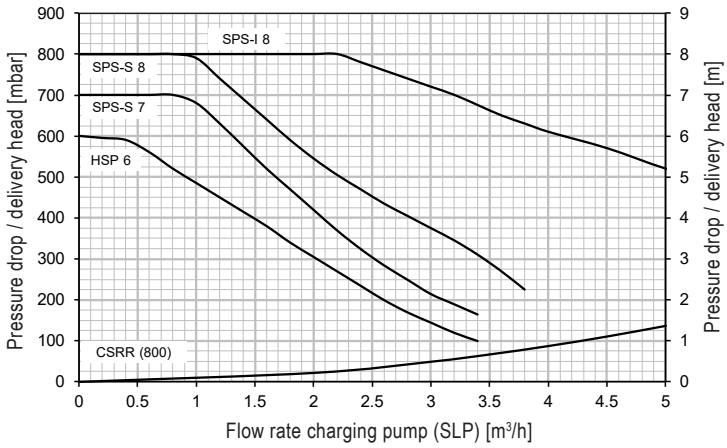

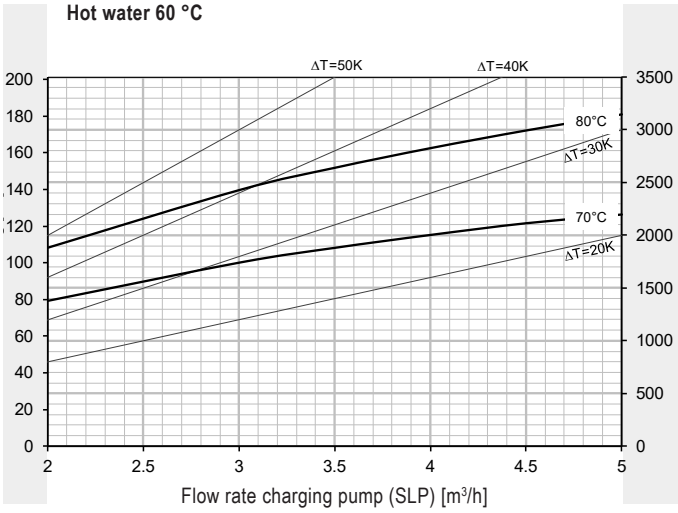

* Calorifier heated to 60 °C

MultiVal CSRR (1000)

Hot water output
Continuous output

Reading example
see engineering

Heat input [kW]

Continuous output [l/h] with heating flow...

Hot water 45 °C

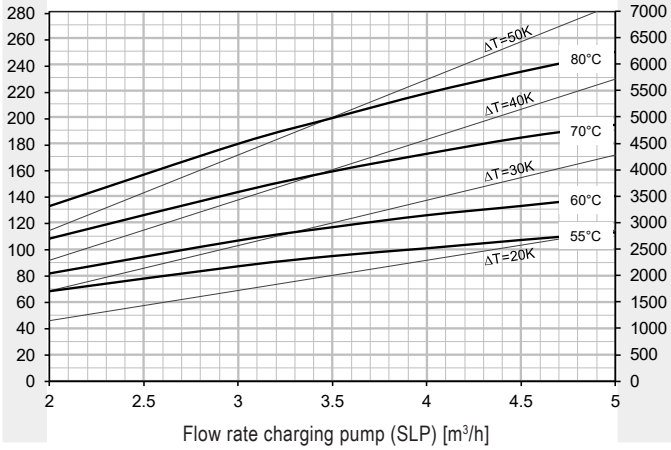

10 min peak output - hot water 45 °C *

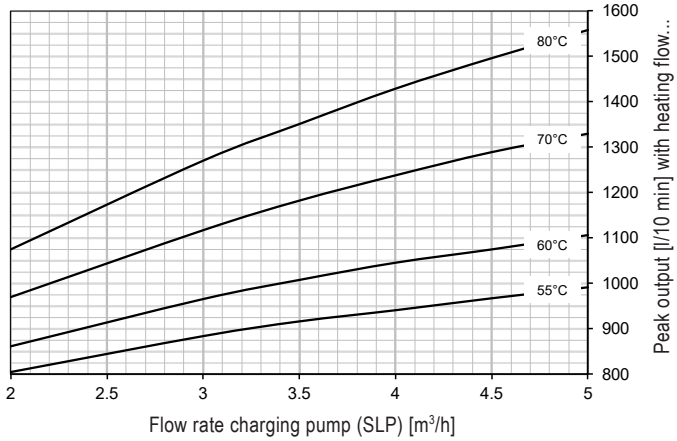

Hot water 55 °C

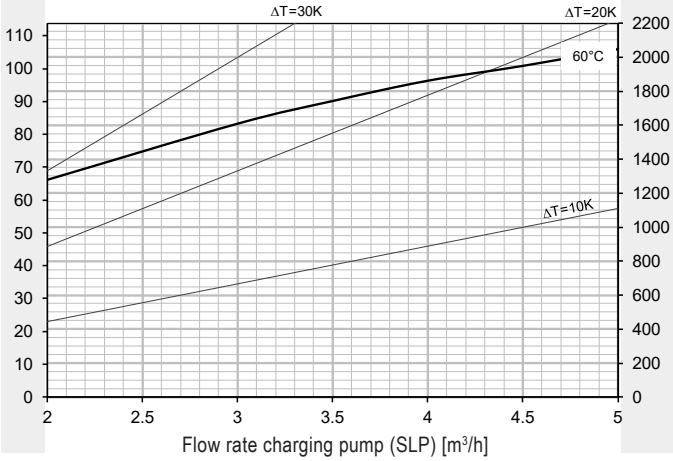

Pressure drop heating coil - delivery head charging pump

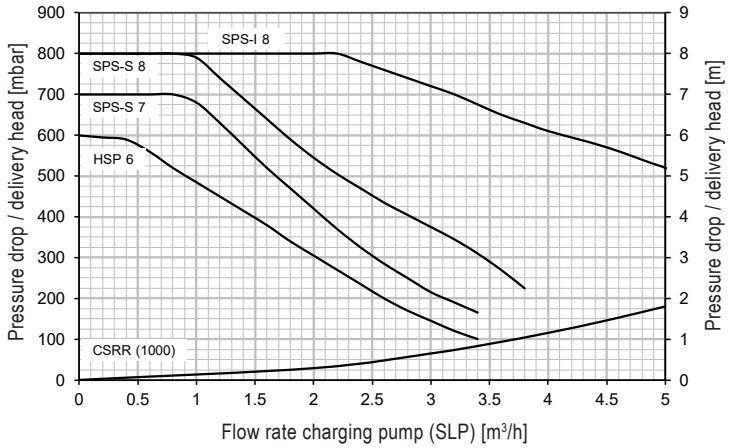

Hot water 60 °C

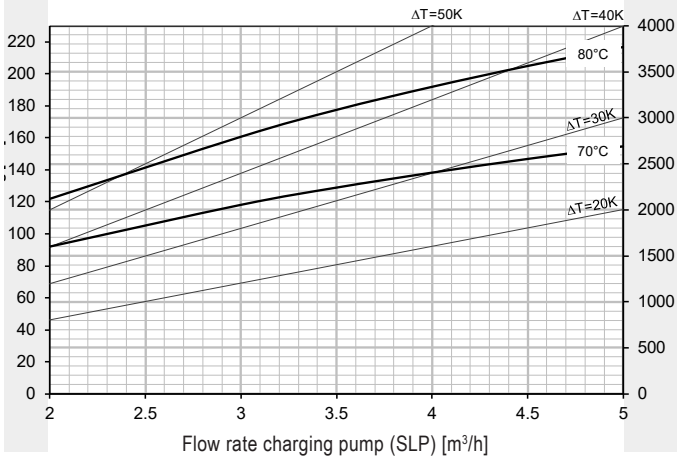

* Calorifier heated to 60 °C

MultiVal CSRR (1500)

Hot water output
Continuous output

Reading example
see engineering

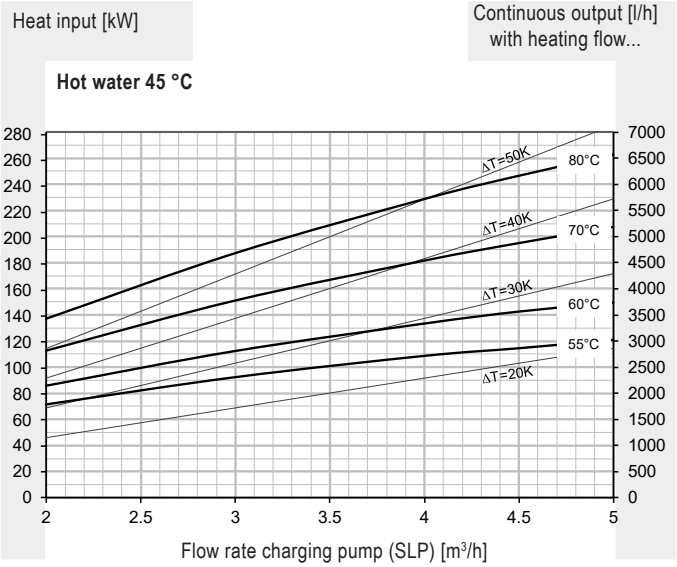

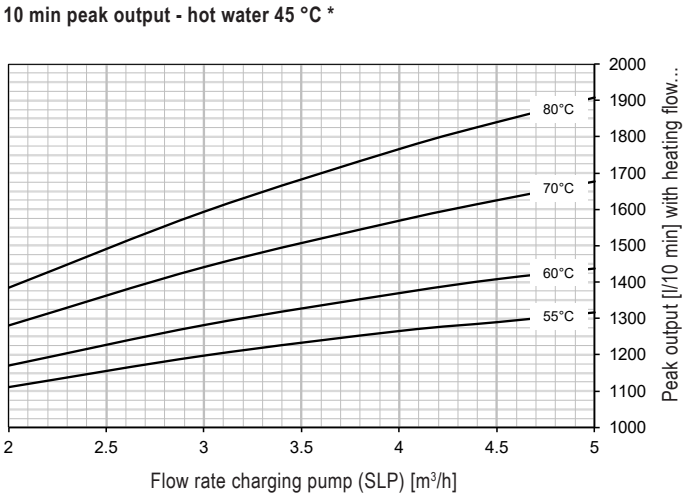

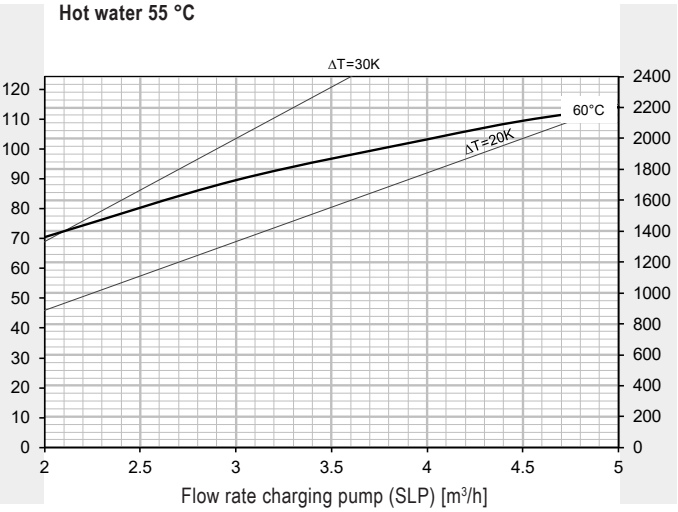

Pressure drop heating coil - delivery head charging pump

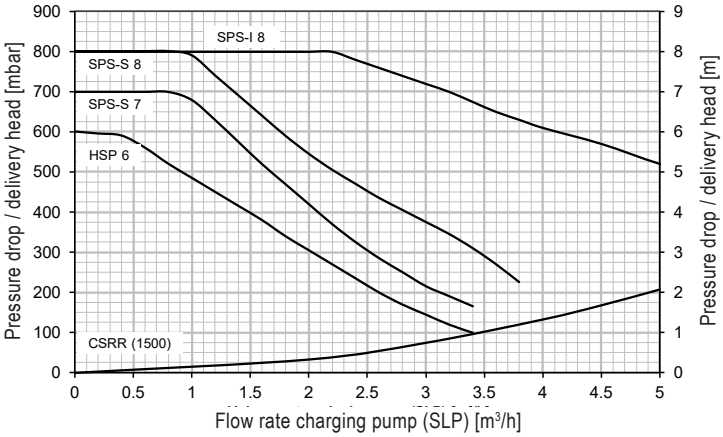

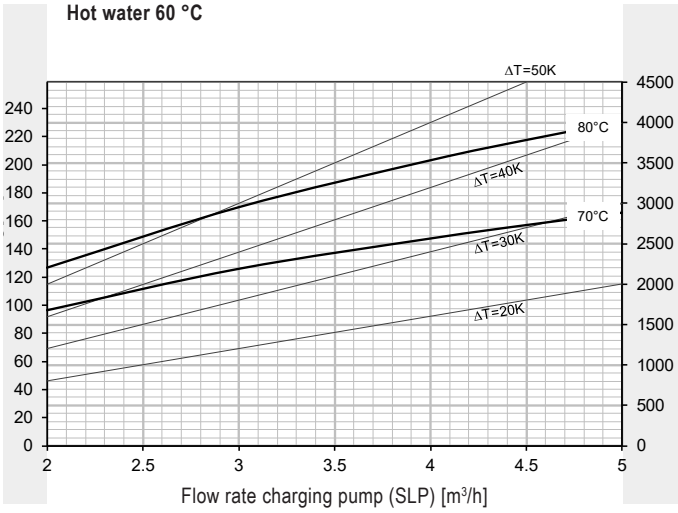

* Calorifier heated to 60 °C

MultiVal CSRR (2000)

Hot water output
Continuous output

Reading example
see engineering

Heat input [kW]

Continuous output [l/h] with heating flow...

Hot water 45 °C

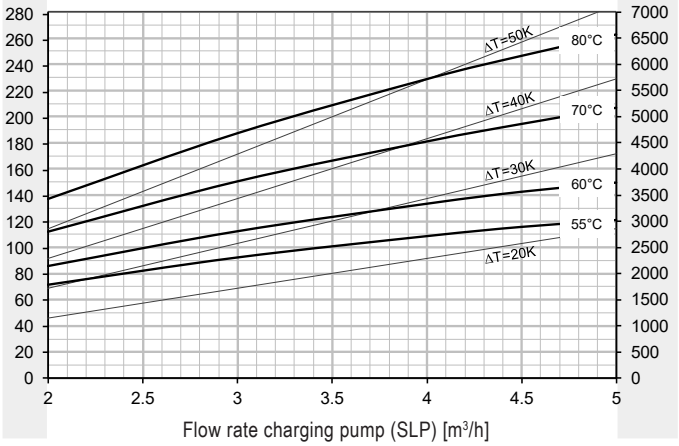

10 min peak output - hot water 45 °C *

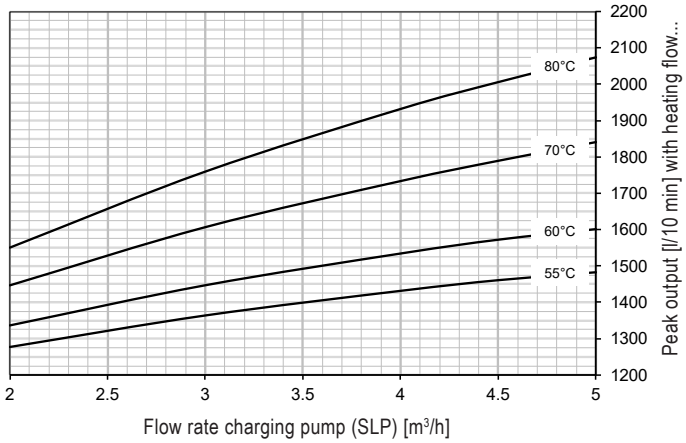

Hot water 55 °C

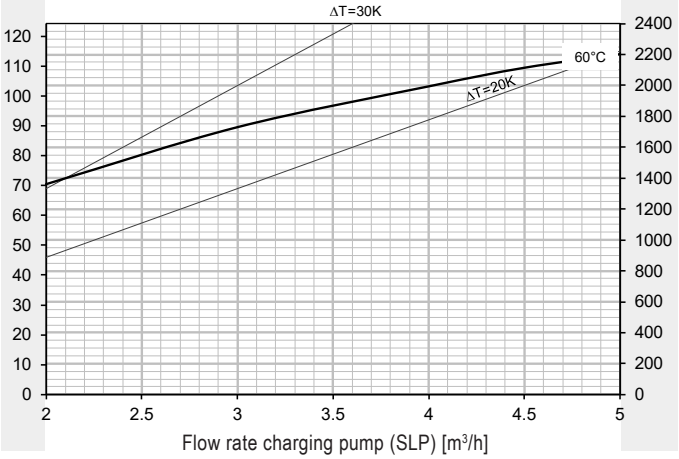

Pressure drop heating coil - delivery head charging pump

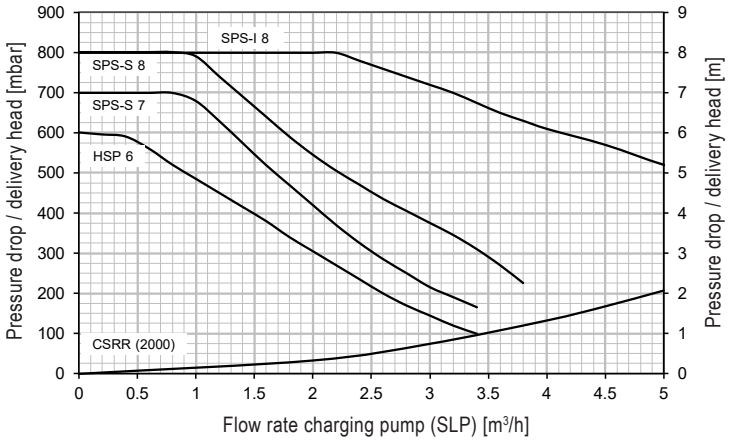

Hot water 60 °C

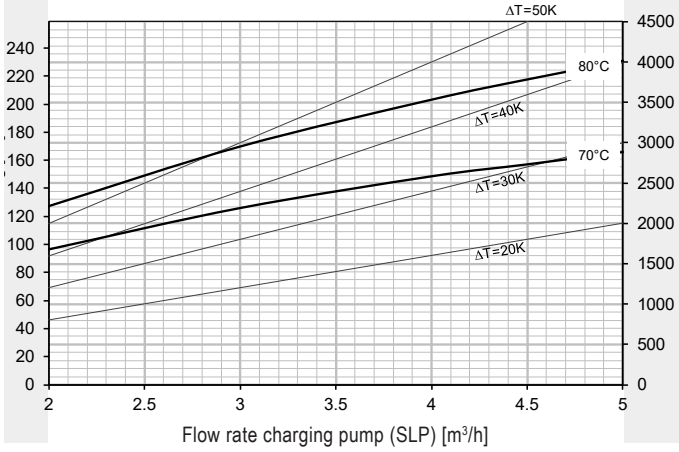

* Calorifier heated to 60 °C

MultiVal CSRR (500)
(Dimensions in mm)

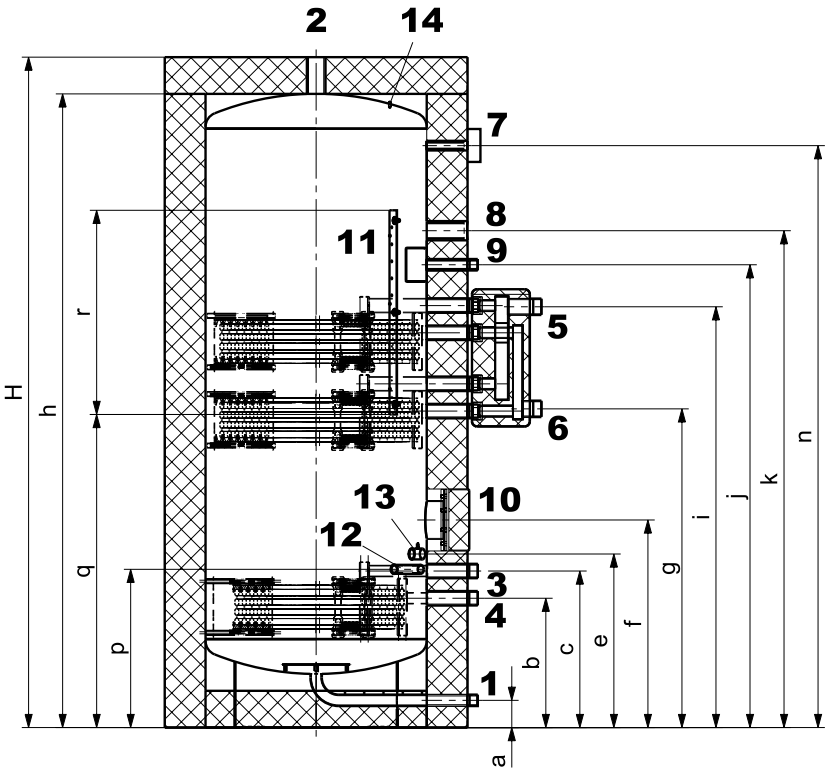

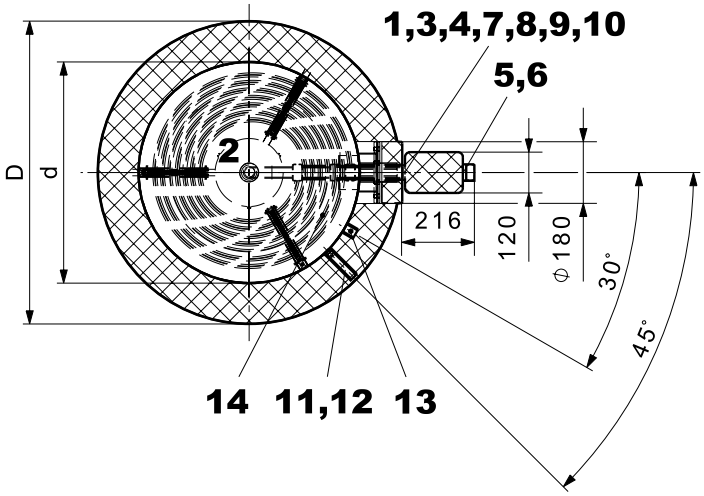

1	Cold water	G 1″ (ET)
2	Hot water	Rp 1½″ (IT)
3	Flow solar circuit	G 1¼″ (ET)
4	Return solar circuit	G 1¼″ (ET)
5	Flow re-heating	R 1½″ (ET)
6	Return re-heating	R 1½″ (ET)
7	Sleeve with mounted immersion sleeve and thermometer (immersion sleeve: L = 200, inner Ø = 8 mm)	Rp ½″ (IT)
8	Connection for screw-in electric heating element	Rp 1½″ (IT)
9	Circulation	G 1″ (ET)
10	Hand-hole flange (flange-mounted electric heating element) ø 180/110 mm, pitch circle ø 150 mm, 8 x M10	
11	Sensor terminal bar 600 x 30 mm	
12	Sleeve with mounted immersion sleeve for sensor, thermostat (immersion sleeve: L = 200, inner Ø = 8 mm)	Rp ½″ (IT)
13	Sleeve with grounding bolt for impressed current anode (perforated thermal insulation) type (500) Attention: observe the installation length	Rp ¾″ (IT) 1 x
14	Equipotential bonding	

Deviations possible as a result of manufacturing tolerances. Dimensions +/- 10 mm

MultiVal CSRR	D	d	H	h	a	b	c	e	f	g	i	j	k	n	p	q	r	Tilting dimension
(500)	890	650	1970	1862	80	380	460	510	610	930	1240	1360	1460	1710	465	950	540	2162

MultiVal CSRR (800-2000)
(Dimensions in mm)

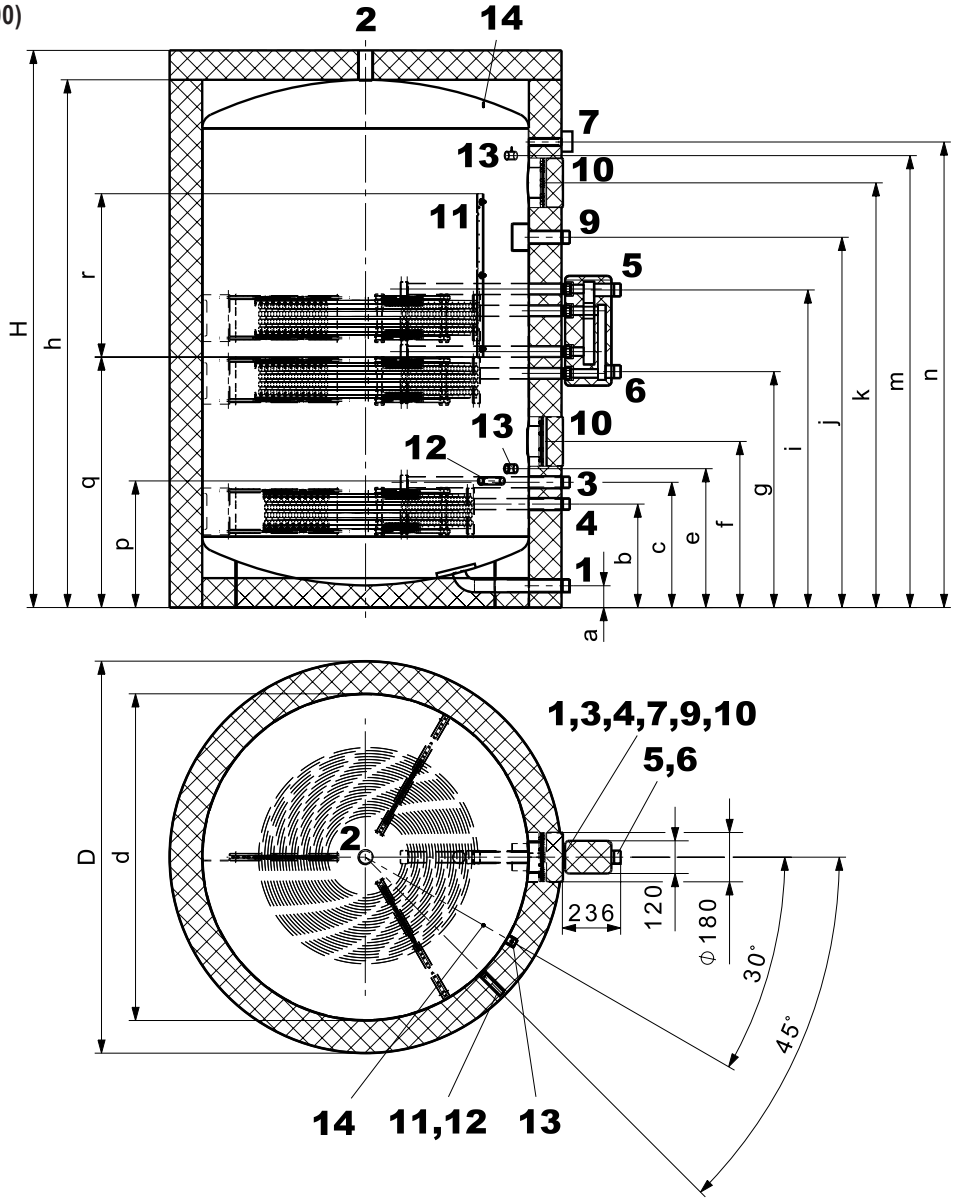

1	Cold water		G 1½″ (ET)	10	Hand-hole flange (flange-mounted electric heating element) Ø 180/110 mm, pitch circle Ø 150 mm, 8 x M10	
2	Hot water		Rp 1½″ (IT)			
3	Flow solar circuit		G 1¼″ (ET)	11	Sensor terminal bar 600 x 30 mm	
4	Return solar circuit		G 1¼″ (ET)	12	Sleeve with mounted immersion sleeve for sensor, thermostat (immersion sleeve: L = 200, inner Ø = 8 mm)	Rp ½″ (IT)
5	Flow re-heating		R 1½″ (ET)			
6	Return re-heating		R 1½″ (ET)			
7	Sleeve with mounted immersion sleeve and thermometer (immersion sleeve: L = 200, inner Ø = 8 mm)		Rp ½″ (IT)	13	Sleeve with grounding bolt for impressed current anode (perforated thermal insulation) type (800)	Rp ¾″ (IT) 1 x
					type (1000-2000)	2 x
9	Circulation	type (800,1000)	G 1¼″ (ET)		Attention: observe the installation length	
		type (1500,2000)	G 1½″ (ET)	14	Equipotential bonding	

Deviations possible as a result of manufacturing tolerances. Dimensions +/- 10 mm

MultiVal CSRR	D	d	H	h	a	b	c	e	f	g	i	j	k	m	n	p	q	r	Tilting dimension
(800)	990	790	1991	1883	80	380	460	510	610	930	1240	1360	1560	-	1710	465	950	540	2224
(1000)	1090	890	1991	1883	80	380	460	510	610	930	1240	1360	1560	1660	1710	465	950	540	2270
(1500)	1340	1100	2012	1904	80	380	460	510	610	930	1240	1360	1560	1660	1710	465	950	540	2417
(2000)	1440	1200	2046	1938	80	380	460	510	610	860	1170	1360	1560	1660	1710	465	950	540	2502

Hoval CombiVal WPE, WPER, WPEF

Compact device for domestic hot water

Air/water heat pump

- With fully hermetic reciprocating compressor, aluminium helical tube condenser in double shell, lamellar tube evaporator (Cu/Al) and thermostatic expansion valve
- Fan (2-stage)
- Air intake/outlet to the top or sideways
- Air intake/outlet aperture Ø 160 mm
- Refrigerant R134a
- Recirculated air/outside air mode
- Microprocessor comfort control. Different possibilities of combination of heat generators (heat pump, electric heating element and boiler). Independent fan functions for ventilation. Automatic legionella program, alarm with error display
- Defrosting operation
- Can be used in conjunction with photovoltaic (Smart Grid ready)
- Air temperature range -10 °C to +35 °C

Calorifier

- Calorifier made of steel with double enamel coating
- Volume 270 l
- WPER with enamelled plain tube heat exchanger for heating boiler operation (integral)
- Magnesium protective anode
- Electric heating 2.0 kW
- Thermal insulation from polyurethane, not removable
- Attractive red casing; upper cover and front panel black
- WPER (300): with integrated heater battery
- WPEF (300): with cleaning flange on the end

Delivery

- Heat pump with calorifier ready-assembled, insulated, lagged and wired
- Ready for operation
- Metal base available at extra charges

On site

- Charging pump and sensor for heating boiler operation
- Air ducting

Range

CombiVal type			Refrigerant	Output kW
WPE	(300)	A	R134a	1.78
WPER	(300) [1]	A	R134a	1.78
WPEF	(300) [2]	A	R134a	1.78

[1] With integrated heating battery
[2] With cleaning flange on the front

Calorifier heat pump

Hoval CombiVal WPE, WPER, WPEF

Recirculated air/outside air mode. Air/water heat pump for water heating. Calorifier made of steel with double enamelled coating and electric heating built in.
WPER: with integrated heating register.
WPEF: with cleaning flange on the end.
Cased and ready to plug in. Defrosting operation and microprocessor comfort control included.

CombiVal type		Persons [1] approx.	Output kW	Heating surface m^2	Part No.
WPE	A	4	1.78	-	7016 339
WPER	A	4	1.78	1.00	7016 340
WPEF	A	4	1.78	-	7016 341

[1] Persons = number of persons who can be supplied with domestic hot water (approximate values).

Tests

Hoval CombiVal WPE (300)
Test number WPZ-B-111-16-11

Accessories (only for Hoval CombiVal WPER (300))

Immersion sensor TF/2P/5/6T, L = 5.0 m with plug — 2056 788
for TopTronic® E controller modules/ module expansions with exception of basic module district heating/fresh water or basic module district heating com
cable length: 5 m with plug
sensor sleeve diameter: 6 x 50 mm
dewpoint-proof
operating temperature: -20…105 °C
protection class: IP67

Immersion sensor TF/2P/5/6T, L = 5.0 m — 2055 888
for TopTronic® E controller modules/ module expansions with exception of basic module district heating/fresh water or basic module district heating com,
cable length: 5 m without plug
sensor sleeve diameter: 6 x 50 mm,
dewpoint-proof,
operating temperature: -20…105 °C,
protection class: IP67

Immersion sensor TF/12N/2.5/6T, L = 2.5 m — 2056 791
for gas boiler with RS-OT
Cable length: 2.5 m
Sensor sleeve diameter: 6 x 50 mm,
dewpoint-proof,
operating temperature: -20…105 °C,
protection class: IP67

At TopTronic® E, immersion sensor is included in the boiler controller or in the heating controller set.

Service

Commissioning
Commissioning by works service or Hoval trained authorised serviceman/company is condition for warranty.

For commissioning and other services please contact your Hoval sales office.

Part No.

CombiVal WPE, WPER, WPEF (300)

Type		WPE (300)	WPER (300)	WPEF (300)
• Content	litres	270	258	270
• Operating/test pressure	bar	6/12	6/12	6/12
Max. operating temperature				
• Max. heat pump operation	°C	62	62	62
• Boiler operation	°C	65	65	65
• Electric operation	°C	65	65	65
Recommended economy temp.				
• Heat pump operation	°C	48	48	48
• Polystyrene foam thermal insulation	mm	80	80	80
• Electrical power dissipation at 55 °C (EN16147:2011)	Watt	20	20	20
• Transport weight	kg	137	160	137
Dimensions				
• Height	mm	1780	1780	1780
• Diameter	mm	710	710	710
• Depth	mm	720	720	720
• Air inlet/outlet Ø	mm	160	160	160
Heater coils (integral)				
• Heating surface	m^2	-	1.0	-
• Heating water	litres	-	5.9	-
• Flow resistance at 1 m^3/h	mbar	-	25	-
• Operating pressure	bar	-	3	-
• Flow temperature maximum	°C	-	80	-
Heat pump				
• Refrigerant		R 134a	R 134a	R 134a
• Filling	kg	0.9	0.9	0.9
• Average heat output [1)]	kW	1.78	1.78	1.78
• Average electrical power consumption[1)]	kW	0.49	0.49	0.49
• Performance [1)]	COP	3.61	3.61	3.61
• Power consumption	A	2.0	2.0	2.0
• Max. starting current	A	9.6	9.6	9.6
• Electric fuse protection	A	13 T	13 T	13 T
• Max. supply air temperature	°C	35	35	35
• Min. supply air temperature	°C	-10	-10	-10
Nominal air quantity (not under load)				
• Stage 1	m^3/h	200	200	200
• Stage 2	m^3/h	300	300	300
Ext. pressure				
• Stage 1	Pa	80	80	80
• Stage 2	Pa	-	-	-
• Sound power level	dB(A)	59	59	59
Sound pressure level 1 m				
• Stage 1	dB(A)	49	49	49
• Stage 2	dB(A)	55	55	55
• Electrical immersion heater 230 V	kW	2.0	2.0	2.0
• Electric connection (device) voltage/frequency	V/Hz	230/50	230/50	230/50
• Hot water output/day [2)]	number of persons	4	4	4

[1)] According to the following standards: EN16147:2011, EHPA Testing Regulation V1.8 A20 / W10-53 (60 % r.h.), EN12102 und EN9614-2

[2)] Number of persons who can be supplied with hot water at the plants without hot water circulation (approximate values without recharge).

Hoval CombiVal WPE, WPER, WPEF
(Dimensions in mm)

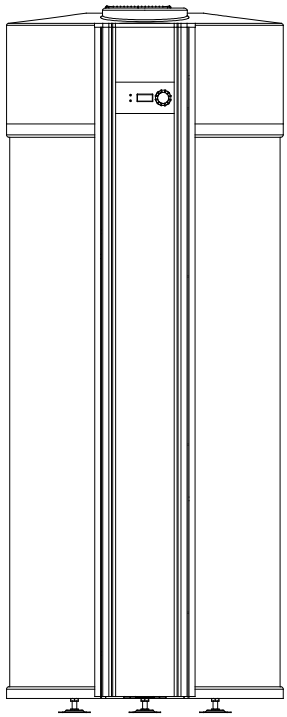

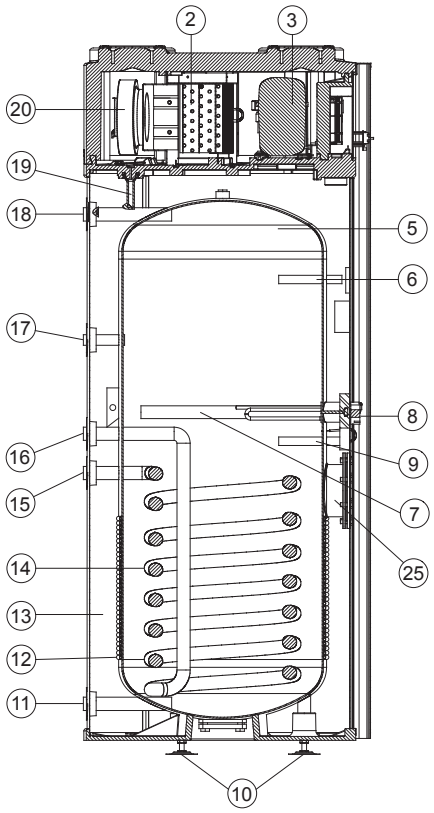

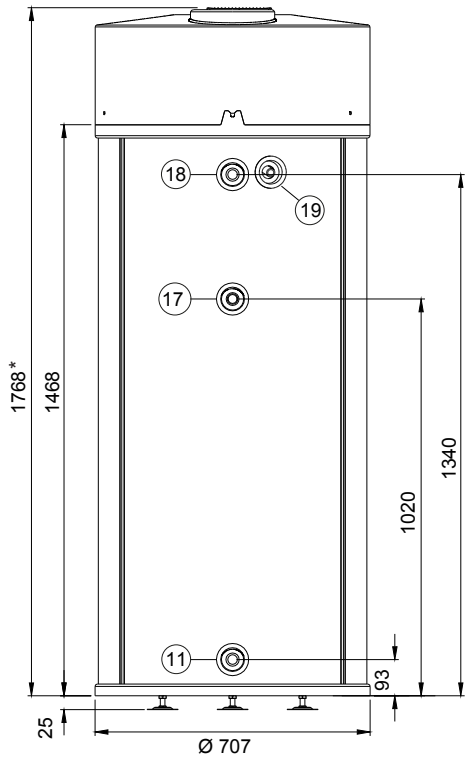

* with adjustable foot set 1890-1920 mm
Tilting dimension with standard feet 1930 mm

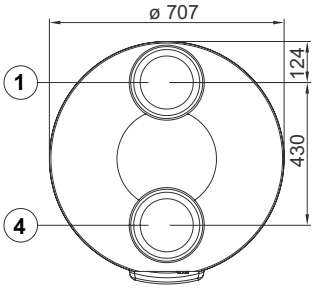

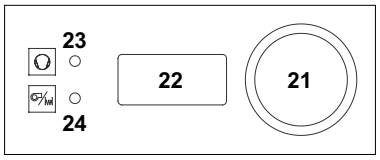

1 Air outlet Ø 160 mm
2 Evaporator
3 Compressor
4 Air inlet Ø 160 mm
5 Enamelled tank
6 Immersion tube for sensor Ø 15 mm, length 160 mm
7 Anode
8 Heating element
9 Immersion tube for operating sensor Ø 15 mm, length 160 mm
10 Adjustable feet
11 Cold water inlet R 1″
12 Safety condenser
13 Thermal insulation
14 Heating coil (only WPER)
15 Inlet heating coil (only WPER) R 1″
16 Outlet heating coil (only WPER) R 1″
17 Circulation nozzle R ¾″
18 Hot water outlet R 1″
19 Condensate discharge (plastic, Ø DN 15)
20 Fan
21 Operating button - rotary push-button
22 Control panel (display)
23 Operating/warning light heat pump
24 Operating/warning light auxiliary heating
25 Cleaning flange Ø 110 mm (only WPEF)
26 Screw M12 x 25-8.8-Fe/Zn8 (PN-EN ISO 4017)
27 Flange seal Ø 174 x 3
28 Dummy flange

Cleaning flange with CombiVal WPEF

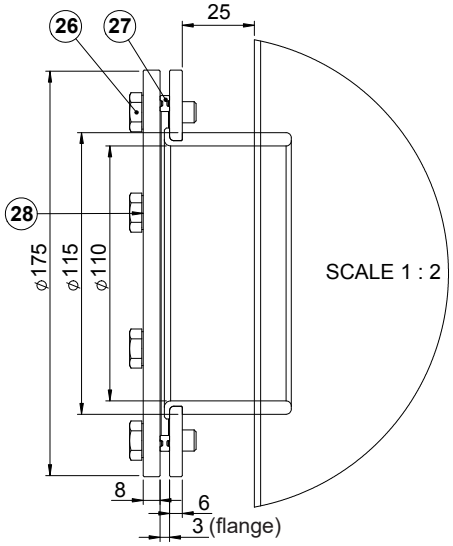

Deviations possible as a result of manufacturing tolerances. Dimensions +/- 10 mm

Regulations and guidelines

The following regulations and guidelines should be complied with:

- technical information and installation guide of Hoval company
- DIN EN 1736: Refrigerating systems and heat pumps
- DIN EN 378: Refrigerating systems and heat pumps - Safety and environmental requirements
- DIN EN 13313: Refrigerating systems and heat pumps - Competence of personnel
- VDI Directive 2035: Protection against corrosion and boiler scale in heating and domestic hot water systems.
- Technical instructions on noise (TA-Lärm)
- Chemicals climate protection regulation

Ecology

Ordinance on substances (federal)

- Handling of refrigerant art. 45 (professional authorisation)
- List of refrigerant and heat carrier fluids according to VWF (regulation about protection of waters from water-hazardous liquids) regulation article 22, Paragraph 2
- Sound protection regulation 814.331
- SN (Swiss norms) 253 120 (definitions of refrigerant)
- Local regulations

Electric connection

- VSE (Association of Swiss Engineers) recommendations for connection of heat pump plants for heating and water heating to the network of electric power stations (2.29d, September 1983).
- Regulations of local electric power stations
- VDE directives
- Technical connection condition (TAB 2019) for connecting to the low voltage grid

Planning and construction

- Low loss header
- Regulations of SVGW (Swiss Association for Gas and Water Supply) (especially guideline W3), as well as regulation of local water supply
- SN 253 130
  Requirements to installation place
- Local fire police regulations as well as country-specific regulations
- Fire protection regulations of the VKF (Association of Cantonal Insurance Companies)
- Guidelines of SWKI (Swiss Association of Heat and Climate Engineers) 91-1 and aeration and deaeration of the heating room
- FWS (Swiss Society for Promotion of Heat Pumps) and AWP (Working Committee for Heat Pumps) guidelines and leaflets
- Guidelines “Procal corrosion and boiler scale protection in heating and industrial water plants”.
- The LRV (air purity regulation) regulations must be kept (bivalent plants)
- Regulations concerning operating pressure and temperature
- EN 806 “Technical rules for drinking water installation”.
- ÖNORM B 2531 (national supplement to EN 806).

Installation

Hoval calorifier heat pumps type CombiVal WPE, WPER can be installed without a base in any unheated room with a floor drain for the condensate. The room temperature must not be below 6 °C with devices without additional heating system. Minimum room size 20 m³. The intake air should not contain any aggressive substances (ammonia, sulphur, chlorine, halogens, etc.).

Air connection

Intake on top at front
Outlet on top at the back
(see Dimensions)

- The length of air tubes with max. 2 bows amounts to:

Intake/blow pipeline	total length
Ø 160 mm	max. 3 m
with extension to 200 mm:	
Ø 200 mm	max. 7 m

- *The indicated total length should not be exceeded!*

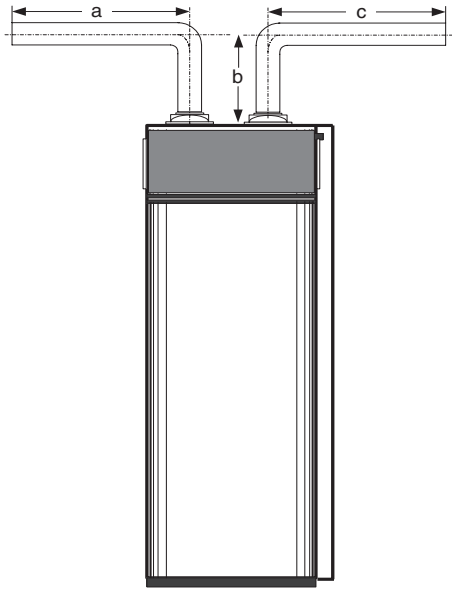

Maximum total length = a + b + c + b

Plumbing installation

- If possible the DHW distribution system should be without circulation.
- Select short pipeline configurations.
- Pay attention to compatibility of water pipelines and calorifier.

Using copper and galvanised steel tubes always pay attention to the succession of flow direction: copper after galvanised steel.

- The hot water pipes must be thermally insulated in accordance with the local regulations, as well as the currently valid building energy legislation.
- If water pipeline pressure is higher than 5 bar, a pressure reduction valve is to be fitted into the cold water pipeline.
- The condensate connection (at the rear of the heat pump, R ½") must be routed to the wastewater drain with plastic pipes via a siphon.
- The condensate drain can also be combined with the drain of the expansion water from the safety valve. Depending on the air humidity, up to 0.3 l/h condensate can occur.

Heating assembly (WPER)

- The auxiliary heating coil must be equipped with a charging pump on site.
- There should be installed an automatic aspirator in the heating water flow.
- Flow and return should be connected in such a way, that with switched off charging pump (heating with heat pump or electrically) no back circulation and no gravity circulation can take place.
- Expansion of heating water must be always ensured (also during electric charging resp. heat pump operation).

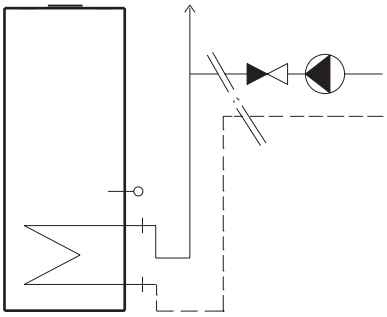

Electric connection

- Ready-for-use wiring (plug with 2 m cable) (230 V socket or 230 V/50 Hz Schuko socket)

Required space

- Installation area diameter 700 mm
- Minimum distance to the walls min. 200 mm
- Required space operation side min. 600 mm
- Minimum distance to the ceiling: 250 mm

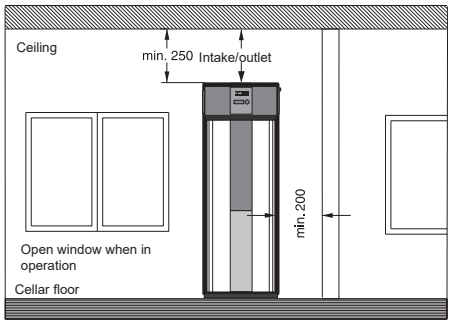

Installation in the heating room

- *Air ducting*
  Air drawn from and blown into the room
- Recovery of unusable waste heat

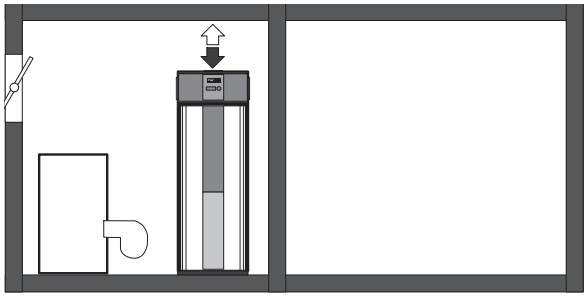

Installation in the heating room with heating only heat pump

- *Air ducting*
  Air drawn from and blown into the neighbouring room
- Min. room volume 25 m³
- Cooling, dehumidification (wine cellar, storeroom)

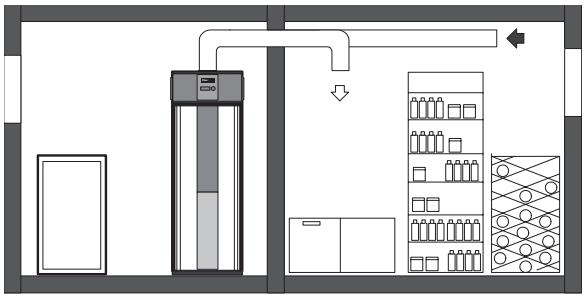

Installation in the utility room

- *Air ducting*
  Air drawn from and blown into the room
- Min. room volume 20 m³
- Dehumidification, use heat of condensate (laundry room)
- Air intake grille must be cleaned monthly
- Clean evaporator at least 1 time per year

Installation in recreation room

- *Air ducting*
  Inflow and outflow of air either from the room or from outdoors
- min. room volume 20 m³
  If the air guide shown in the drawing is used, the window can remain closed.

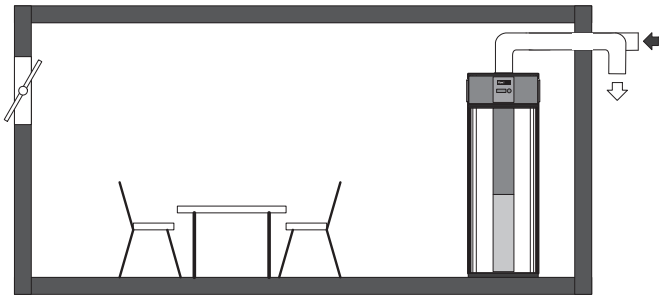

Air duct pipelines

- Intake/blow pipes made of plain tube, min. Ø 160 or 200 mm.
- Max. total length of pipeline should be 3 or 7 m, with max. 2 bows (90°). (For each further bow the total length of pipe must be reduced by 1 m.)
- Supply of pipeline incl. accessories by the customer (ventilating pipe made of plastic, aluminium or galvanised sheet steel).

Hoval Modul-plus
Calorifier

- Calorifier made of stainless steel
- Heating water casing made of steel
- Heat exchanger made of modular elements made of steel for hot water output up to 10000 l/h at 60 °C and heating output from 60-720 kW
- Thermal insulation
  - Inner polyurethane rigid foam shells
  - Middle mineral wool mats (hard), 50 mm
  - External panelling incl. floor with mineral wool mats (soft), 50 mm
  - With EPP hoods on the front
- Casing made of sheet steel, red powder-coated
- Counter flange and screws completely installed

On request
- Charging pump
- Divided version

Delivery
- Calorifier and casing are delivered separately

Control panel with thermostats

Type EK 107-90
- For installation into the casing of the Modul-plus
- Incl. thermometer 0-150 °C
- Incl. temperature control from 30-90 °C
- Operating temperature max. 90 °C

Type EK 108-110
- For installation in the casing at the Modul-plus
- Incl. thermometer 0-150 °C
- Incl. temperature control 30-90 °C
- Temperature limiter STB 110 °C
- Operating temperature max. 110 °C

Range

Modul-plus

F (21)
F (31)
F (41)
F (51)
F (32)
F (42)
F (52)

F (21) S
F (31) S
F (41) S
F (51) S
F (32) S
F (42) S
F (52) S

FH (21) S
FH (31) S
FH (41) S
FH (51) S
FH (32) S
FH (42) S
FH (52) S

F (21) SM
F (31) SM
F (41) SM
F (51) SM
F (32) SM
F (42) SM
F (52) SM

FH (21) SM
FH (31) SM
FH (41) SM
FH (51) SM
FH (32) SM
FH (42) SM
FH (52) SM

FH (21) SX
FH (31) SX
FH (41) SX
FH (51) SX
FH (32) SX
FH (42) SX
FH (52) SX

F	=	Standard version with up to 30 mg/l chloride content
F...S	=	Special version with up to 100 mg/l chloride content
FH...S	=	Special version max. DHW max. 10 bar Heating max. 8 bar up to 100 mg/l chloride content
F...SM	=	Special version with magnesium anode up to 200 mg/l chloride content
FH...SM	=	Special higher-pressure version DHW max. 10 bar Heating max. 8 bar with magnesium anode up to 200 mg/l chloride content
FH...SX	=	Special higher-pressure version DHW max. 10 bar Heating max. 8 bar with Correx® anode up to 300 mg/l chloride content

Calorifier

Modul-plus

High output calorifier made of stainless steel with heating water casing made of steel.

Delivery
Calorifier and casing delivered separately packed.

Type:
Operating pressure hot water 6 bar, Heating 5 bar.
For domestic water up to max. 30 mg/l chloride content. Opening for cleaning in front.

Modul-plus type	Height mm	kW [1]	Flats [2]	Heating surface m²	Part No.
F (21)	1615	76.5	9	2.84	7014 740
		115.5	12		
F (31)	1615	113.9	17	4.26	7014 741
		148.5	20		
		187.2	25		
F (41)	1800	136.3	30	5.68	7014 742
		213.6	40		
		250.2	45		
F(51)	2160	199.4	45	7.10	7014 743
		268.6	70		
		321.5	80		
F (32)	1615	227.9	60	8.52	7014 744
		297.0	75		
		329.6	80		
		374.4	90		
F (42)	1800	272.6	100	11.36	7014 745
		354.0	> 100		
		427.3	> 100		
F (52)	2160	398.8	> 100	14.20	7014 746
		537.2	> 100		
		634.8	> 100		

[1] kW = power input at 45/10 °C, flow temperature at 80 °C

[2] See technical data for more specific information.

On-site welding

Same model as above, that means
- operating pressure hot water 6 bar
- heating 5 bar
  for domestic water up to max. 30 mg/l chloride content
- opening for cleaning in front

but as welding on site (delivered in parts: module elements, base rail and casing)

The chloride content of the filling and replacement water for the heating system must be < 30 mg/l, otherwise it must be desalinated.

Calorifier

Modul-plus

Special edition:
Operating pressure hot water 6 bar,
Heating 5 bar.
For domestic water up to max. 100 mg/l chloride content. Opening for cleaning in front and at the back.

Modul-plus type	Height mm	kW [1]	Flats [2]	Heating surface m²	Part No.
F (21) S	1615	76.5	9	2.84	7014 747
		115.5	12		
F (31) S	1615	113.9	17	4.26	7014 749
		148.5	20		
		187.2	25		
F (41) S	1800	136.3	30	5.68	7014 751
		213.6	40		
		250.2	45		
F(51) S	2160	199.4	45	7.10	7014 753
		268.6	70		
		321.5	80		
F (32) S	1615	227.9	60	8.52	7014 755
		297.0	75		
		329.6	80		
		374.4	90		
F (42) S	1800	272.6	100	11.36	7014 757
		354.0	> 100		
		427.3	> 100		
F (52) S	2160	398.8	> 100	14.20	7014 759
		537.2	> 100		
		634.8	> 100		

[1] kW = power input at 45/10 °C, flow temperature 80 °C

[2] See technical data for more specific information

Special model for high-rise buildings:
operating pressure hot water 10 bar,
heating 8 bar.
For domestic water up to max. 100 mg/l chloride content. Opening for cleaning in front and at the back.

Modul-plus type	Height mm	Heating surface m²
FH (21) S	1615	2.84
FH (31) S	1615	4.26
FH (41) S	1800	5.68
FH (51) S	2160	7.10
FH (32) S	1615	8.52
FH (42) S	1800	11.36
FH (52) S	2160	14.20

The chloride content of the filling and replacement water for the heating system must be < 100 mg/l, otherwise it must be desalinated.

Calorifier

Modul-plus

Special edition:
Operating pressure hot water 6 bar.
Heating 5 bar.
For domestic water up to max. 200 mg/l chloride content. Opening for cleaning in front and at the back. Butt-welded with magnesium anode.

Modul-plus type	Height mm	kW [1]	NL index[2]	Heating surface m²	Part No.
F (21) SM	1615	76.5	10	2.84	7014 770
		115.5	18		
F (31) SM	1615	113.9	18	4.26	7014 771
		148.5	25		
		187.2	35		
F (41) SM	1800	136.3	24	5.68	7014 772
		213.6	43		
		250.2	43		
F (51) SM	2160	199.4	40	7.10	7014 773
		268.6	59		
		321.5	74		
F (32) SM	1615	227.9	49	8.52	7014 774
		297.0	69		
		329.6	79		
		374.4	93		
F (42) SM	1800	272.6	64	11.36	7014 775
		354.0	89		
		427.3	114		
F (52) SM	2160	398.8	107	14.20	7014 776
		537.2	157		
		634.8	195		

[1] kW = power input at 45/10 °C, flow temperature 80 °C

[2] See technical data for more specific information

Special model for high-rise buildings: operating pressure hot water 10 bar, heating 8 bar.
For domestic water up to max. 200 mg/l chloride content. Opening for cleaning in front and at the back. Butt-welded with magnesium anode.

Modul-plus type	Height mm	Heating surface m²	Part No.
FH (21) SM	1615	2.84	7014 777
FH (31) SM	1615	4.26	7014 778
FH (41) SM	1800	5.68	7014 779
FH (51) SM	2160	7.10	7014 780
FH (32) SM	1615	8.52	7014 781
FH (42) SM	1800	11.36	7014 782
FH (52) SM	2160	14.20	7014 783

Calorifier

Modul-plus

Special edition:
Operating pressure hot water 10 bar.
Heating 8 bar.
For domestic water up to max. 300 mg/l chloride content. Opening for cleaning in front and at the back. Butt-welded with Correx® anode.

Modul-plus type	Height mm	kW [1]	NL index[2]	Heating surface m²	Part No.
FH (21) SX	1615	76.5	10	2.84	7014 784
		115.5	18		
FH (31) SX	1615	113.9	18	4.26	7014 785
		148.5	25		
		187.2	35		
FH (41) SX	1800	136.3	24	5.68	7014 786
		213.6	43		
		250.2	43		
FH (51) SX	2160	199.4	40	7.10	7014 787
		268.6	59		
		321.5	74		
FH (32) SX	1615	227.9	49	8.52	7014 788
		297.0	69		
		329.6	79		
		374.4	93		
FH (42) SX	1800	272.6	64	11.36	7014 789
		354.0	89		
		427.3	114		
FH (52) SX	2160	398.8	107	14.20	7014 790
		537.2	157		
		634.8	195		

[1] kW = power input at 45/10 °C, flow temperature 80 °C

[2] See technical data for more specific information

Accessories

		Part No.
	**Electrical box EK 107/90** for Modul-plus Casing with removable front, made of sheet steel, red powder-coated. With thermometer 0-150 °C and temperature controller 30-90 °C. Operating temperature heating 90 °C.	6042 308
	**Electrical box EK 108/110** for Modul-plus Casing with removable front, made of sheet steel, red powder-coated. With thermometer 0-150 °C and temperature controller 30-90 °C. Temperature limiter STB 110 °C. Operating temperature heating 110 °C.	6042 309
	**Cover with thermometer** for Modul-plus for covering if no electrical box is used, with thermometer. Powder-coated sheet steel Colour: red	6041 091
	**Blind cover** for Modul-plus for covering if no electrical box is used. Powder-coated sheet steel Colour: red	6025 189

Services

Commissioning
Commissioning by works service or Hoval trained authorised serviceman/company is condition for warranty.

For commissioning and other services please contact your Hoval sales office.

Modul-plus F (21-52), FH (21-52) and F (21-52) S

Type			(21)	(31)	(41)	(51)	(32)	(42)	(52)
• Module numbers			2	3	4	5	6	8	10
Calorifier									
• Content		litres	249	367	485	603	721	957	1193
• Heating surface		m^2	2.84	4.26	5.68	7.1	8.52	11.36	14.2
• Max. hot water temperature		°C	95	95	95	95	95	95	95
• Flow resistance [1]		z value	1.4	2.4	3	3.6	0.74	0.9	1.1
• Heat loss at 65 °C		W	164	188	212	236	417	444	497
• Operating pressure	normal type [2]	bar	6	6	6	6	6	6	6
	type high-rise building [3]	bar	10	10	10	10	10	10	10
• Test pressure	normal type [2]	bar	12	12	12	12	12	12	12
	type high-rise building [3]	bar	16	16	16	16	16	16	16
• Weight without casing	normal type [2]	kg	165	215	265	315	370	470	570
	type high-rise building [3]	kg	205	275	345	415	490	630	770
• Weight casing		kg	104	104	115	140	121	135	160
Heating									
• Heating water content		litres	30	45	60	75	90	120	150
• Max. heating water temperature		°C	110	110	110	110	110	110	110
• Flow resistance [1]		z value	2	2.8	3.6	4.7	0.78	1	1.4
• Operating pressure	normal type [2]	bar	5	5	5	5	5	5	5
	type high-rise building [3]	bar	8	8	8	8	8	8	8
• Test pressure	normal type [2]	bar	8	8	8	8	8	8	8
	type high-rise building [3]	bar	12.8	12.8	12.8	12.8	12.8	12.8	12.8

[1] Flow resistance heating battery in mbar = flow rate $(m^3/h)^2$ x z (1 mbar = 0.1 kPa)

[2] Normal version: F (21-52), F (21-52) S, F(21-52) SM

[3] High-pressure version: FH (21-52) S, FH (21-52) SM, FH (21-52) SX

Performance figure

Selection of the calorifier type
at a hot water temperature of 45 °C

Reading example
see engineering

	Comfort			Standard		
NL	70°C	80°C	90°C	70°C	80°C	90°C
1						
2						
3						
4						
5						
6						
7						
8						
9						
10						
11						
12	F21			F21		
13						
14						
15						
16						
17						
18		F21				
19						
20						
21						
22						
23						
24			F21		F21	
25						
26	F31					
27						
28						
29						
30						
31						
32						
33						
34						
35						
36						
37		F31				
38						
39						F21
40						
41						
42				F31		
43						
44						
45						
46						
47						
48	F41					
49						
50						

	Comfort			Standard		
NL	70°C	80°C	90°C	70°C	80°C	90°C
51			F31			
52						
53						
54						
55						
56						
57						
58						
59						
60						
61						
62						
63						
64						
65		F41				
66						
67						
68						
69						
70						
71						
72						
73						
74						
75						
76	F51					
77						
78						
79	F32				F31	
80						
81						
82						
83			F41			
84						
85						
86						
87						
88						
89						
90						
91						
92						
93						
94						
95						
96						
97						
98						
99		F51				
100						
>100	F42/F52	F32/F42/F52	F51/F32/F42/F52	F41/F51/F32/F42/F52	F41/F51/F32/F42/F52	F41/F31/F51/F32/F42/F52

T = heating flow
NL = performance figure
Performance figure NL acc. to DIN 4708 = number of flats which can be supplied with domestic hot water when the calorifier is heated and permanently reheated with the heat generator. (Standard flat: 1 bathroom - 4 rooms - 3.5 persons)
[1] Calculation with simultaneity factor according to DIN 4708 (preferred for Switzerland)
[2] Calculation with simultaneity factor according to Dresden Technical University

10 min peak output/N number with domestic hot water 45 °C
according to DIN 4708 (Comfort) and Dresden Technical University (Standard)

Reading example
see engineering

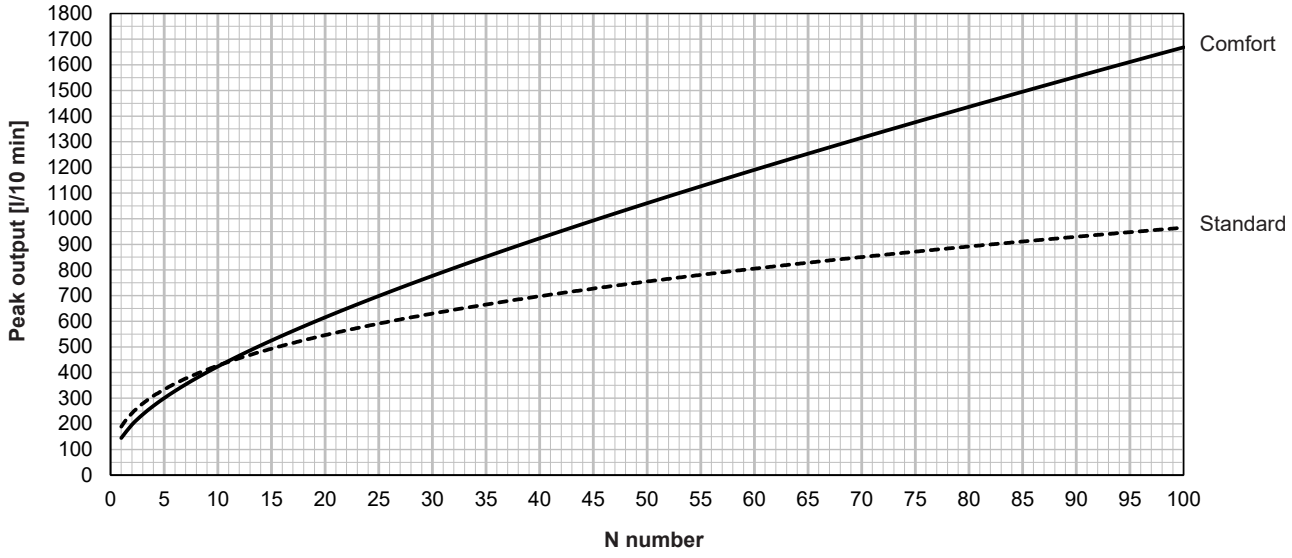

Modul-plus F (21)

Reading example
see engineering

Hot water output
Continuous output

Heat input [kW]

Continuous output [l/h] with heating flow ...

Hot water 45 °C

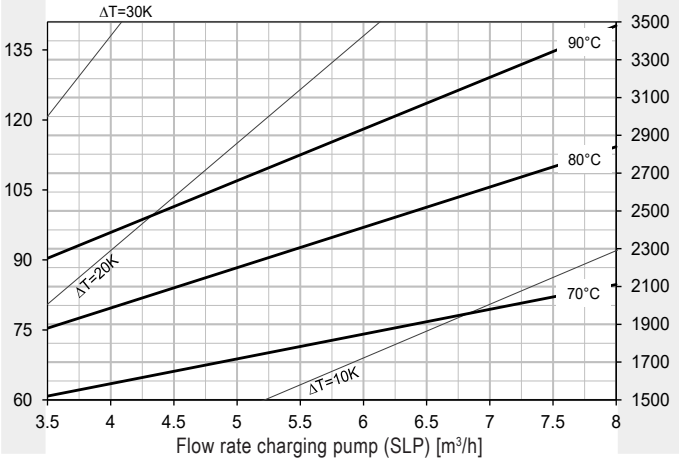

10 min peak output - hot water 45 °C *

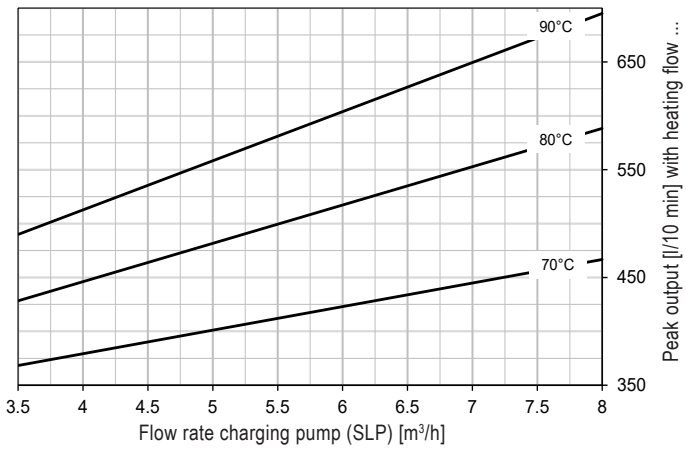

Hot water 60 °C

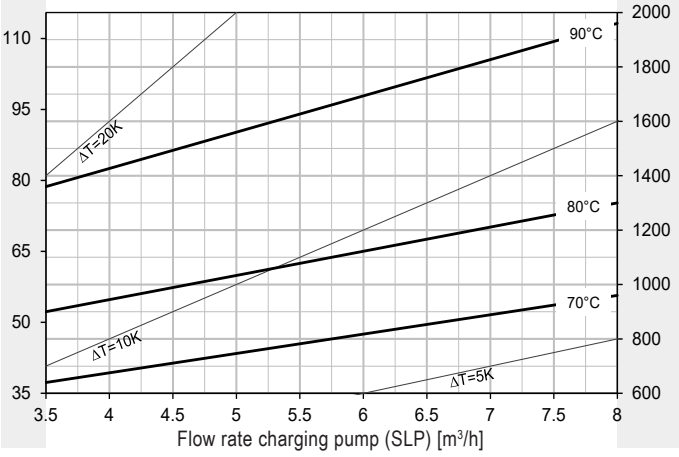

10 min peak output – domestic hot water 60 °C *

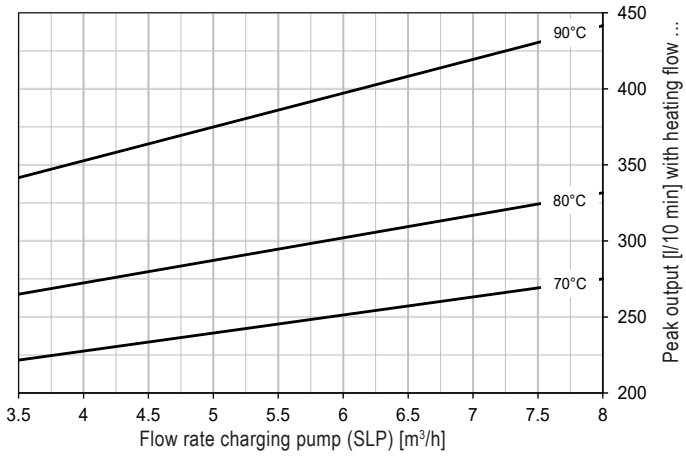

Pressure loss secondary side/domestic hot water side

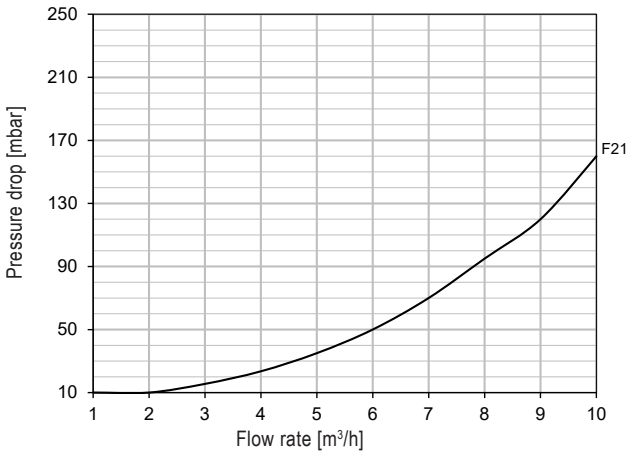

Pressure drop primary side/heating side - delivery head charging pump

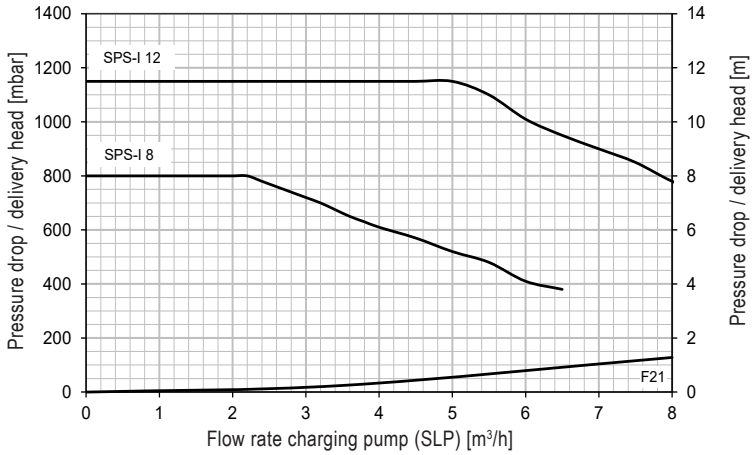

Cold water temperature = 10 °C
ΔT = temperature difference between primary side/heating side (between flow and return)
* Calorifier heated to 60 °C

Modul-plus F (31)

Reading example
see engineering

Hot water output
Continuous output

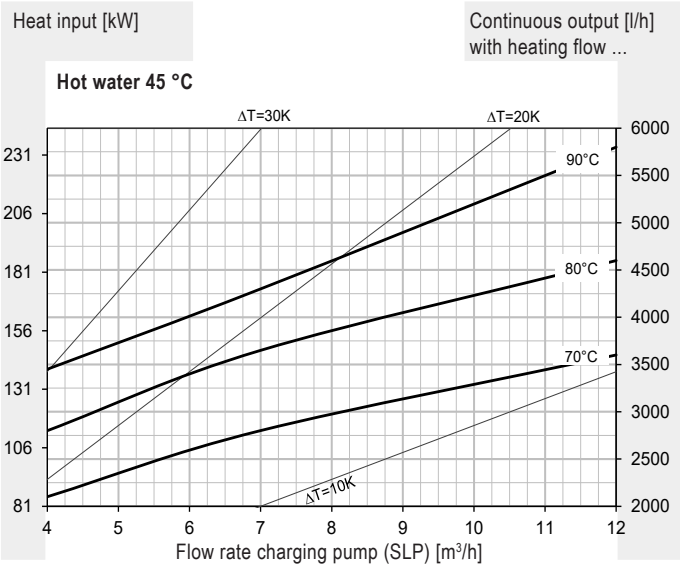

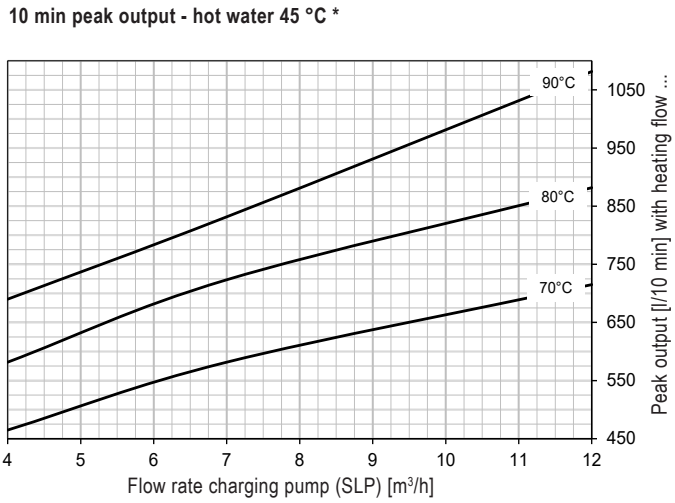

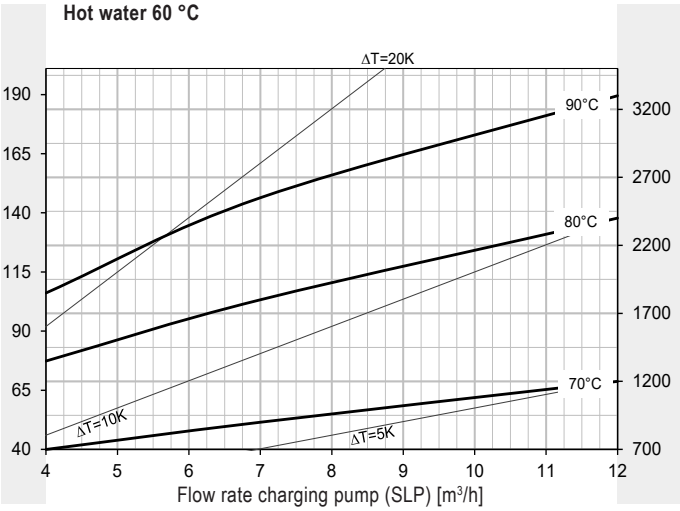

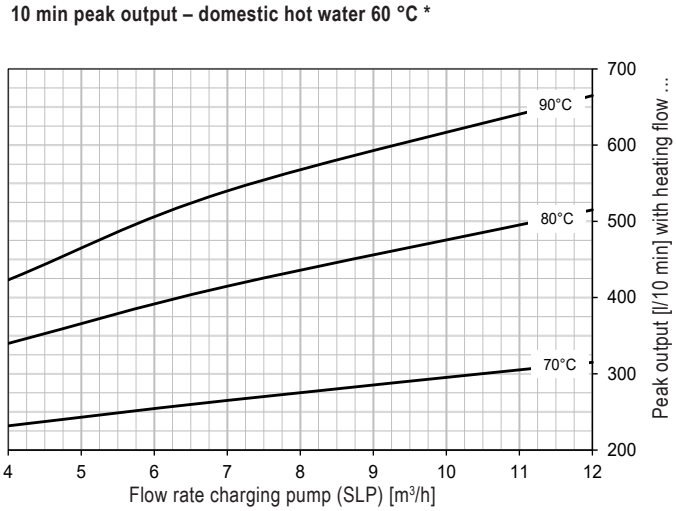

Pressure loss secondary side/domestic hot water side

Pressure drop primary side/heating side - delivery head charging pump

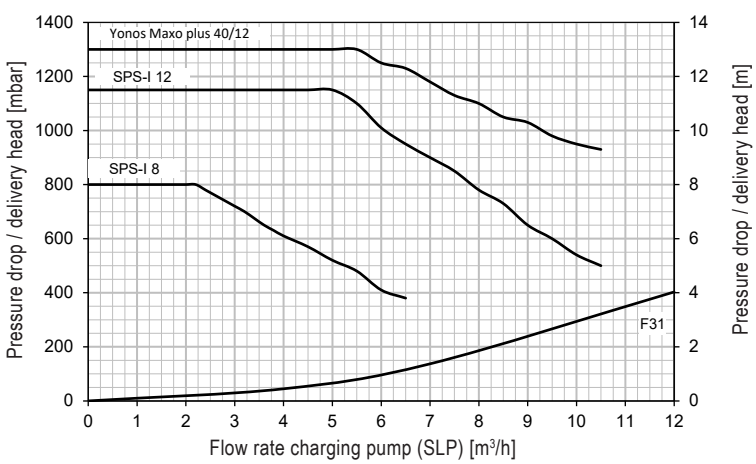

Cold water temperature = 10 °C
ΔT = temperature difference between primary side/heating side (between flow and return)
* Calorifier heated to 60 °C

Modul-plus F (41)

Reading example
see engineering

Hot water output
Continuous output

Heat input [kW]

Continuous output [l/h] with heating flow ...

Hot water 45 °C

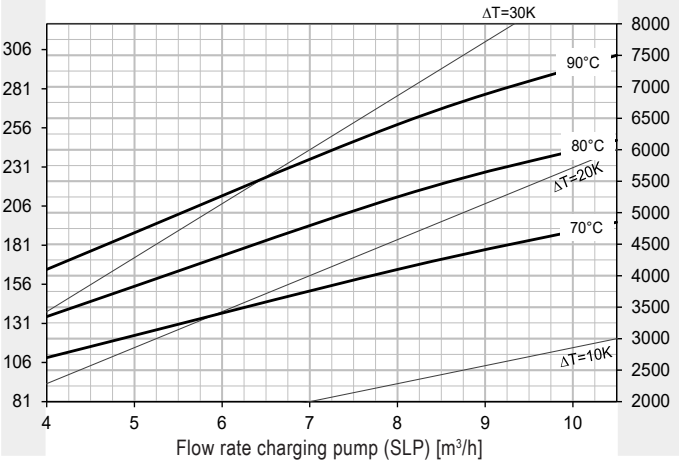

10 min peak output - hot water 45 °C *

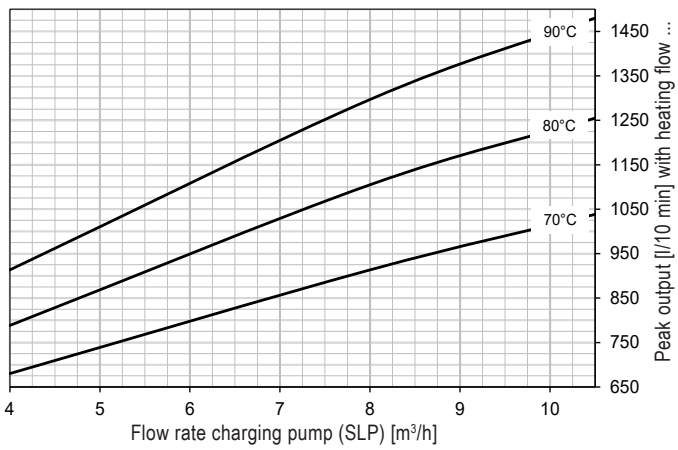

Hot water 60 °C

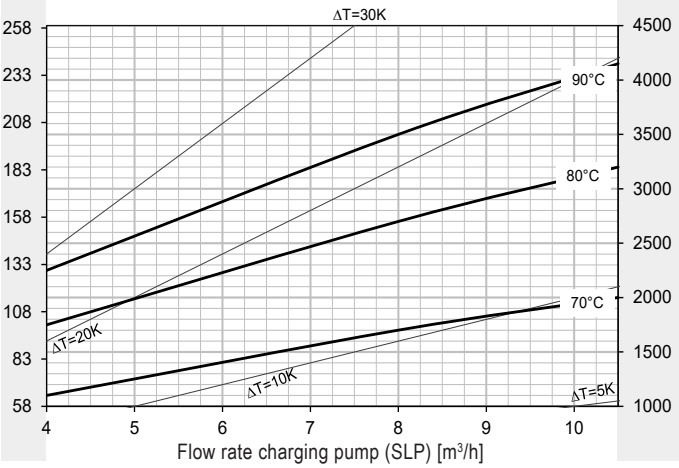

10 min peak output – domestic hot water 60 °C *

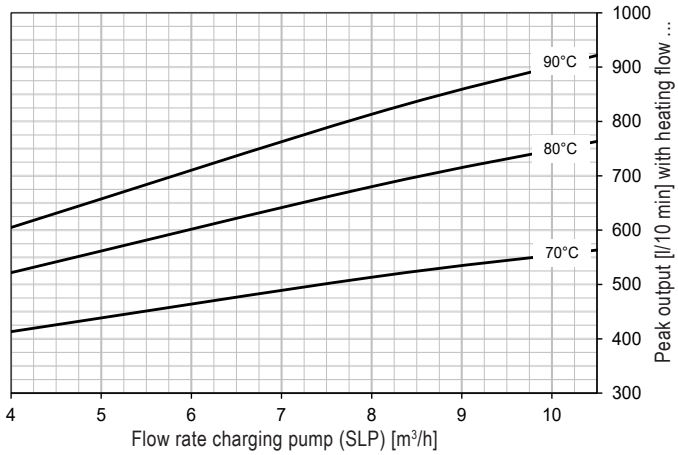

Pressure loss secondary side/domestic hot water side

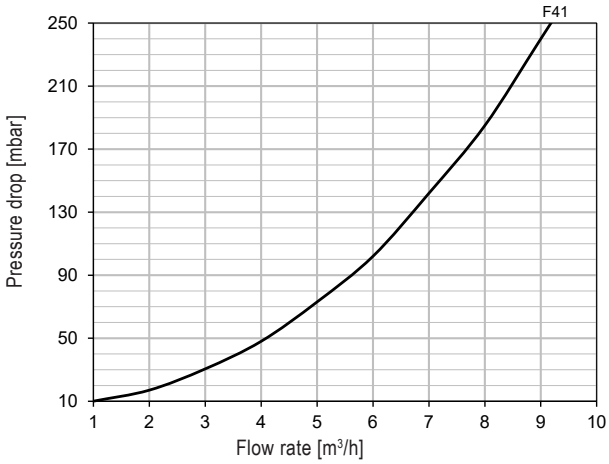

Pressure drop primary side/heating side - delivery head charging pump

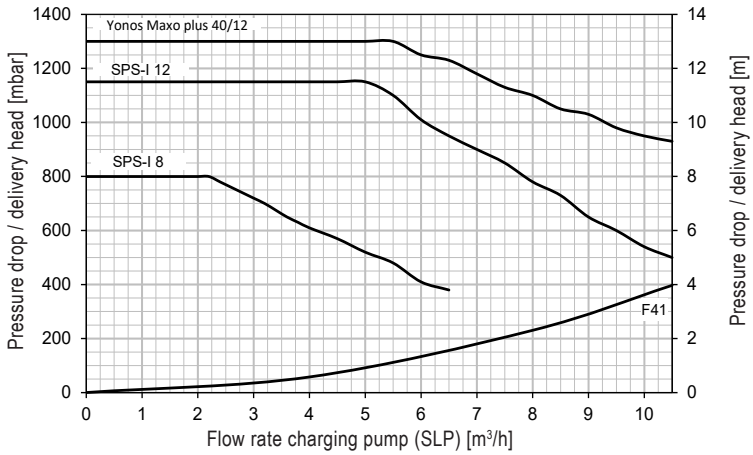

Cold water temperature = 10 °C
ΔT = temperature difference between primary side/heating side (between flow and return)
* Calorifier heated to 60 °C

Modul-plus F (51)

Reading example
see engineering

Hot water output
Continuous output

Heat input [kW]

Continuous output [l/h] with heating flow ...

Hot water 45 °C

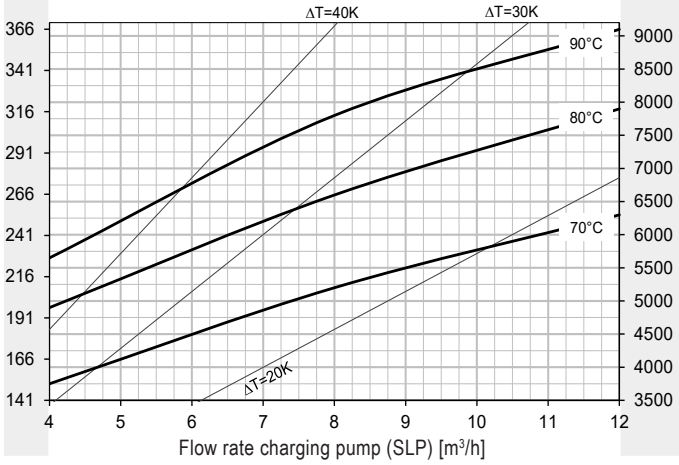

10 min peak output - hot water 45 °C *

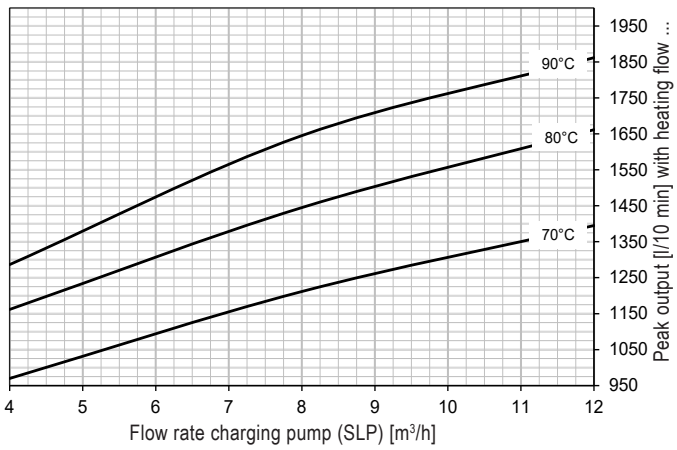

Hot water 60 °C

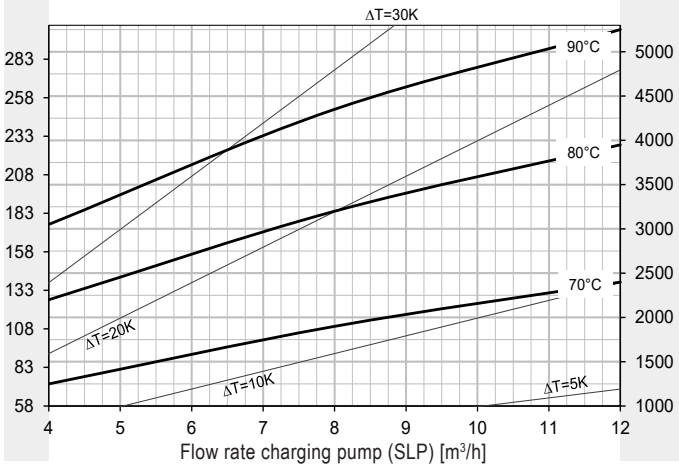

10 min peak output – domestic hot water 60 °C *

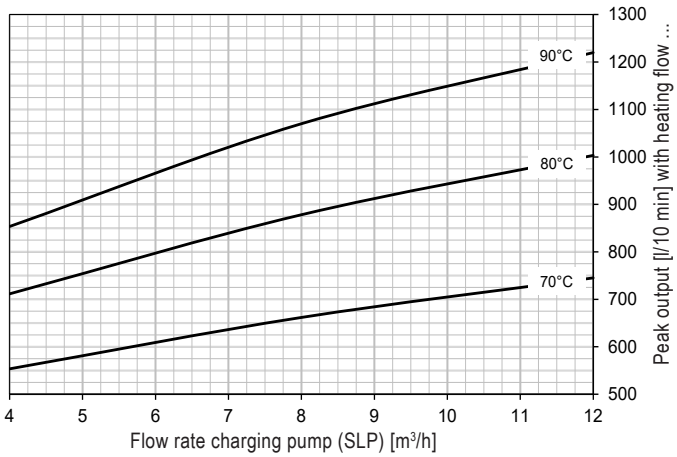

Pressure loss secondary side/domestic hot water side

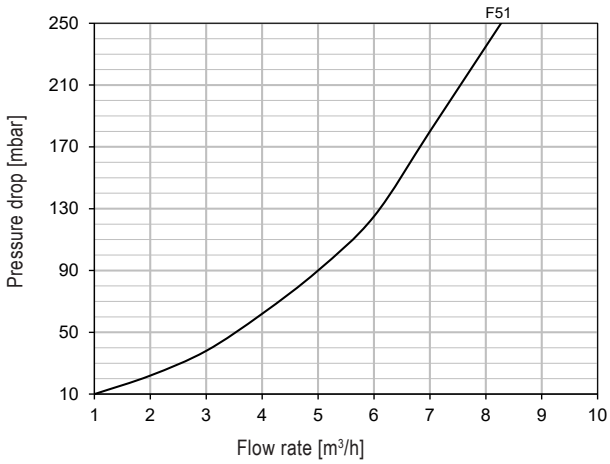

Pressure drop primary side/heating side - delivery head charging pump

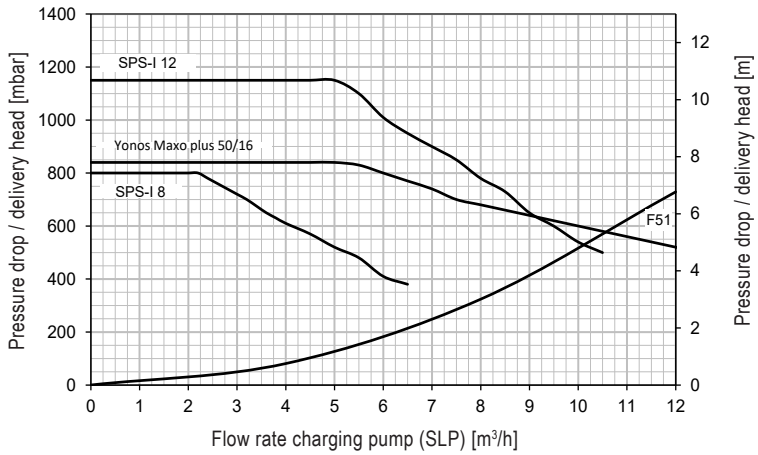

Cold water temperature = 10 °C
ΔT = temperature difference between primary side/heating side (between flow and return)
* Calorifier heated to 60 °C

Modul-plus F (32)

Reading example
see engineering

Hot water output
Continuous output

Heat input [kW]

Continuous output [l/h] with heating flow ...

Hot water 45 °C

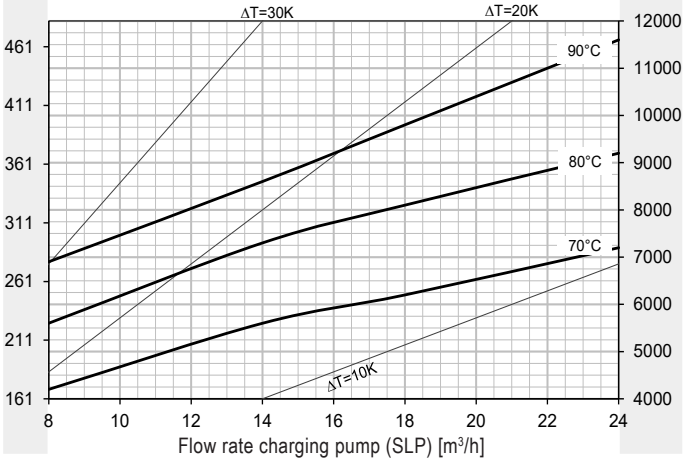

10 min peak output - hot water 45 °C *

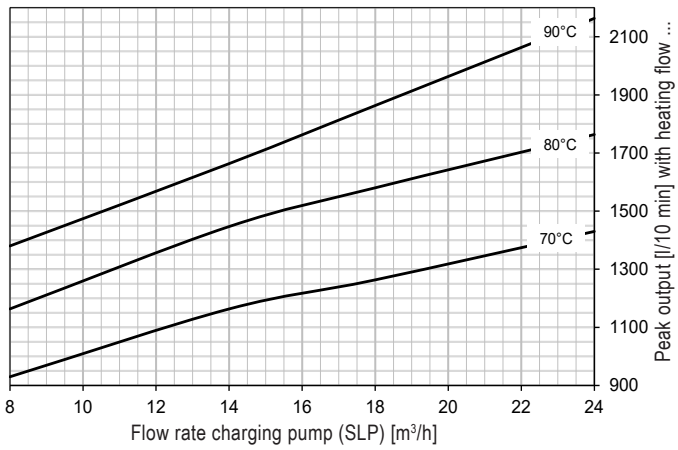

Hot water 60 °C

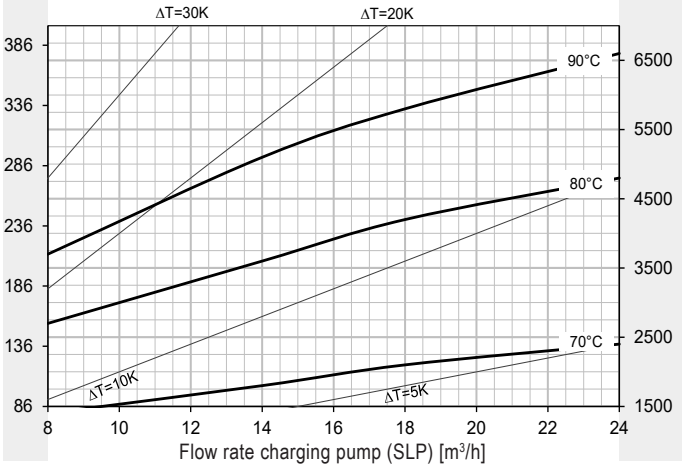

10 min peak output – domestic hot water 60 °C *

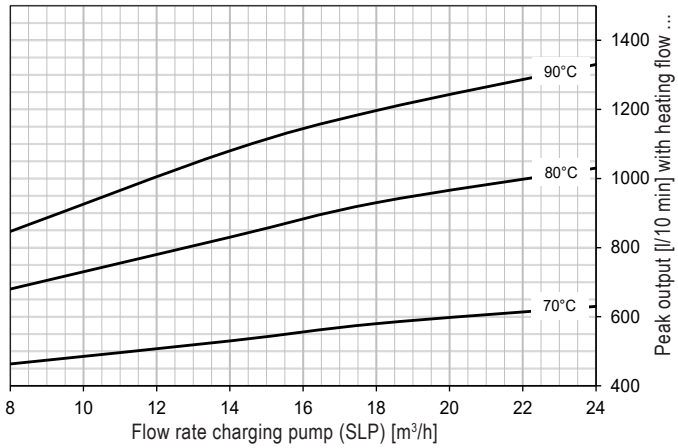

Pressure loss secondary side/domestic hot water side

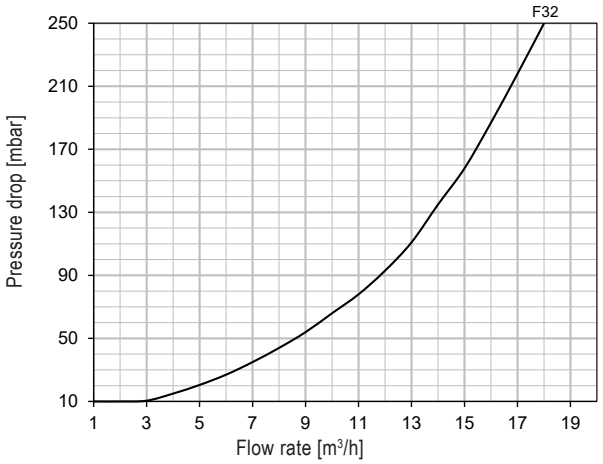

Pressure drop primary side/heating side - delivery head charging pump

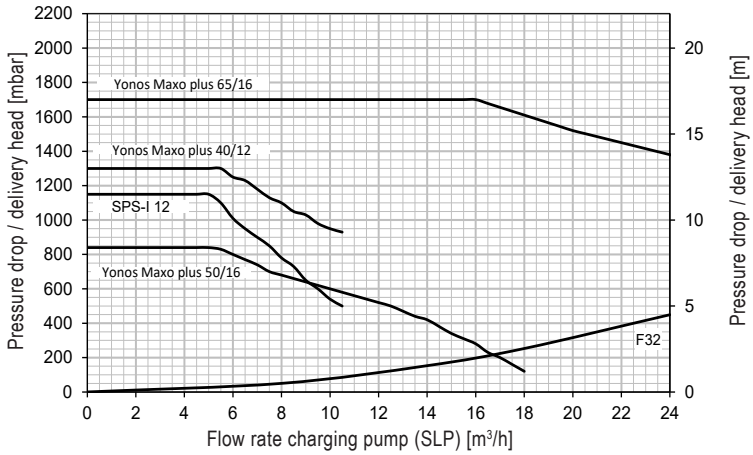

Cold water temperature = 10 °C
ΔT = temperature difference between primary side/heating side (between flow and return)
* Calorifier heated to 60 °C

Modul-plus F (42)

Reading example
see engineering

Hot water output
Continuous output

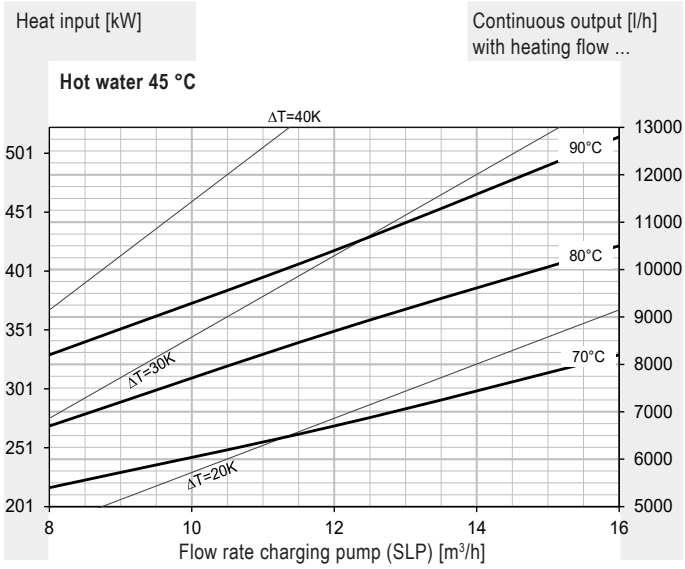

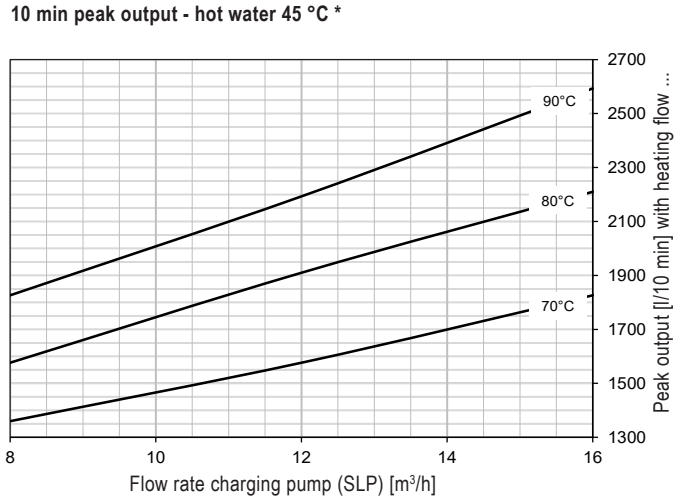

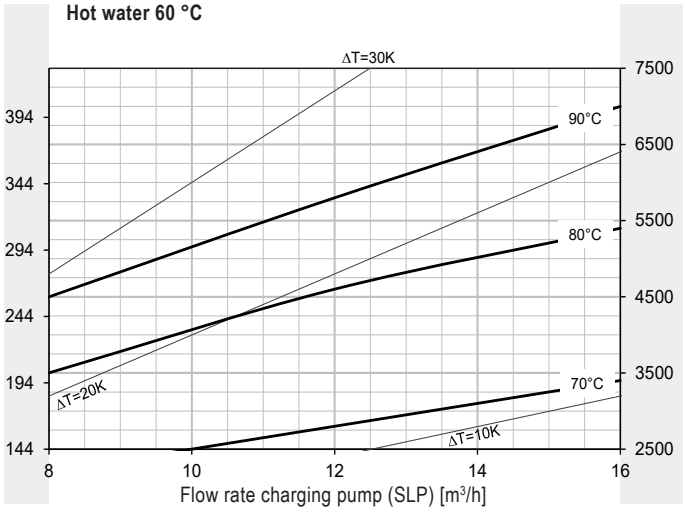

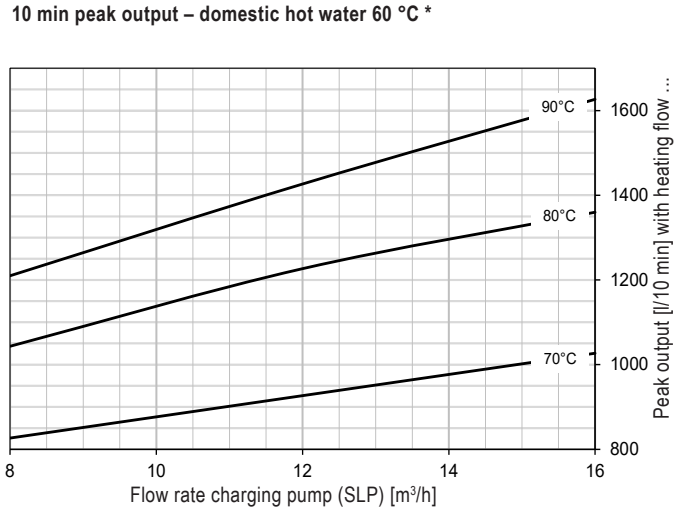

Pressure loss secondary side/domestic hot water side

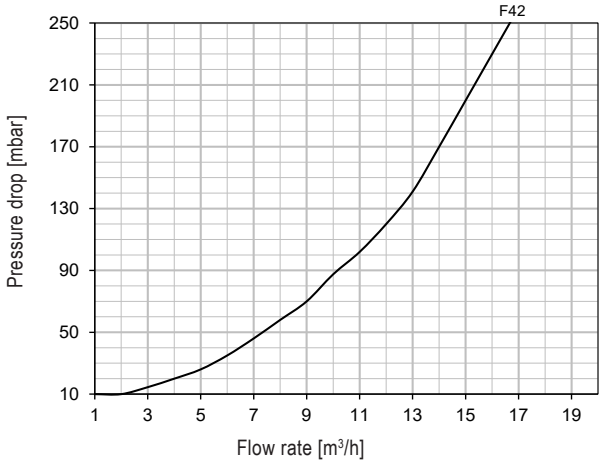

Pressure drop primary side/heating side - delivery head charging pump

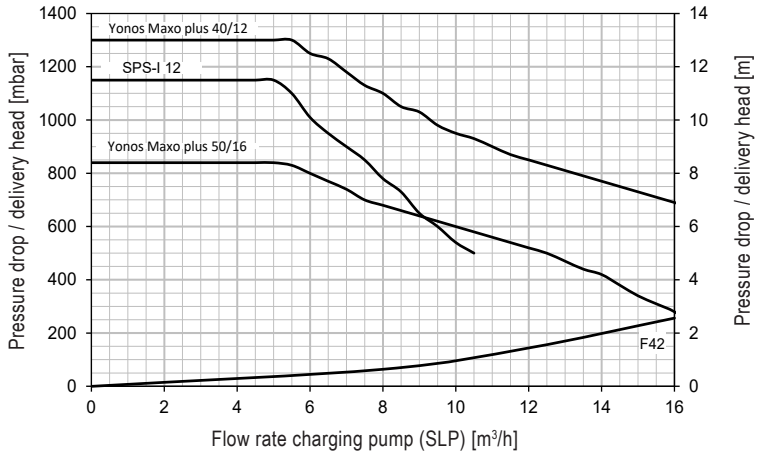

Cold water temperature = 10 °C
ΔT = temperature difference between primary side/heating side (between flow and return)
* Calorifier heated to 60 °C

Modul-plus F (52)

Reading example
see engineering

Hot water output
Continuous output

Heat input [kW]

Continuous output [l/h] with heating flow ...

Hot water 45 °C

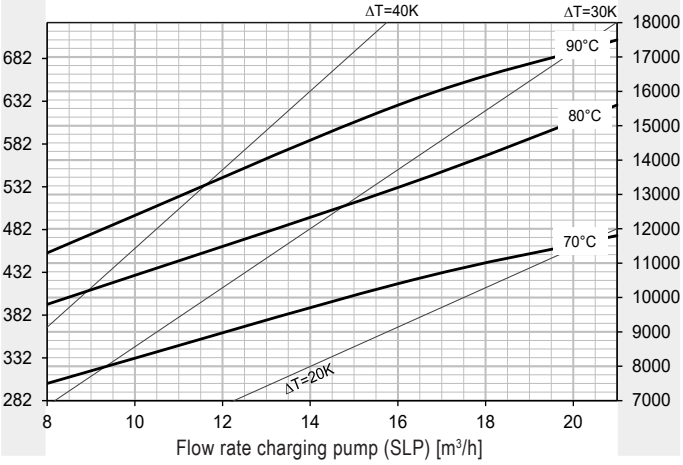

10 min peak output - hot water 45 °C *

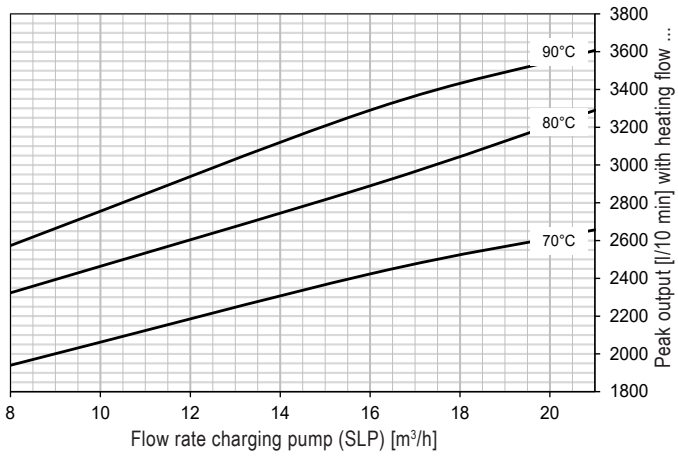

Hot water 60 °C

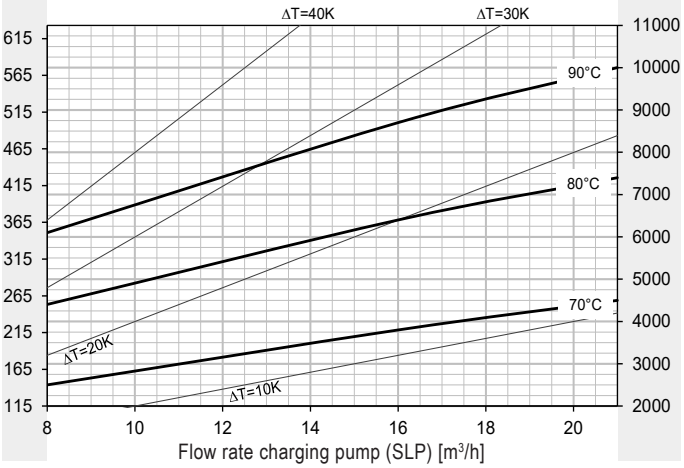

10 min peak output – domestic hot water 60 °C *

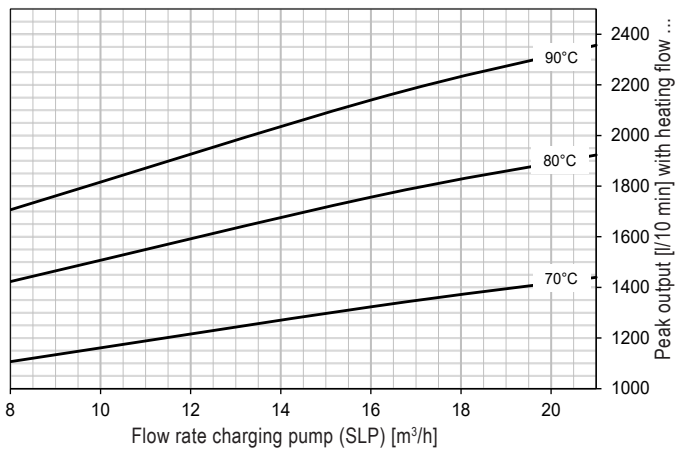

Pressure loss secondary side/domestic hot water side

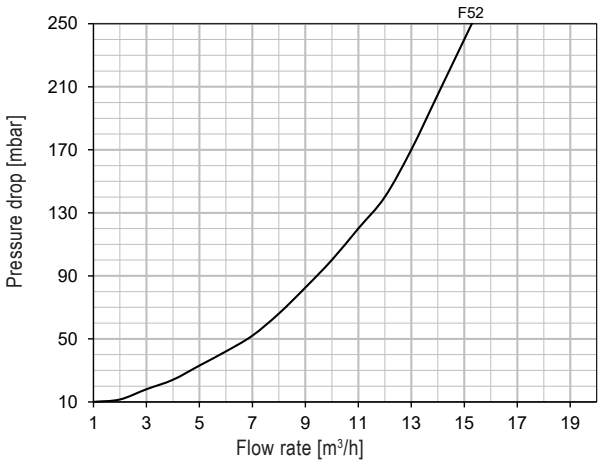

Pressure drop primary side/heating side - delivery head charging pump

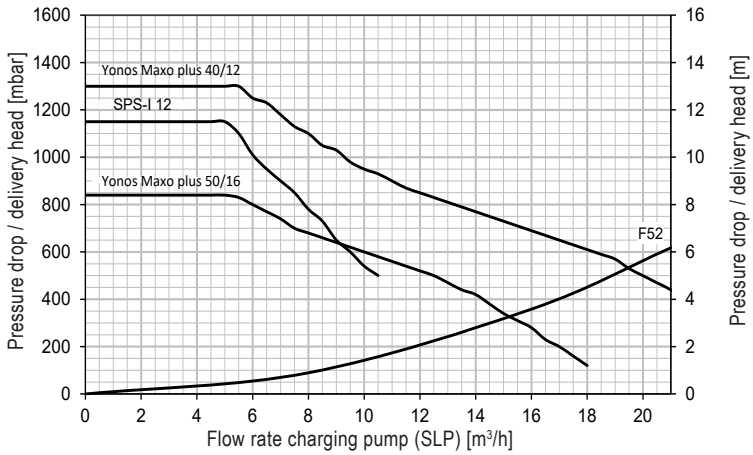

Cold water temperature = 10 °C
ΔT = temperature difference between primary side/heating side (between flow and return)
* Calorifier heated to 60 °C

Modul-plus F (21-52), FH (21-52), F (21-52) S, FH (21-52) S, F (21-52) SM, FH (21-52) SM, FH (21-52) SX

Type (21), (41), (42)

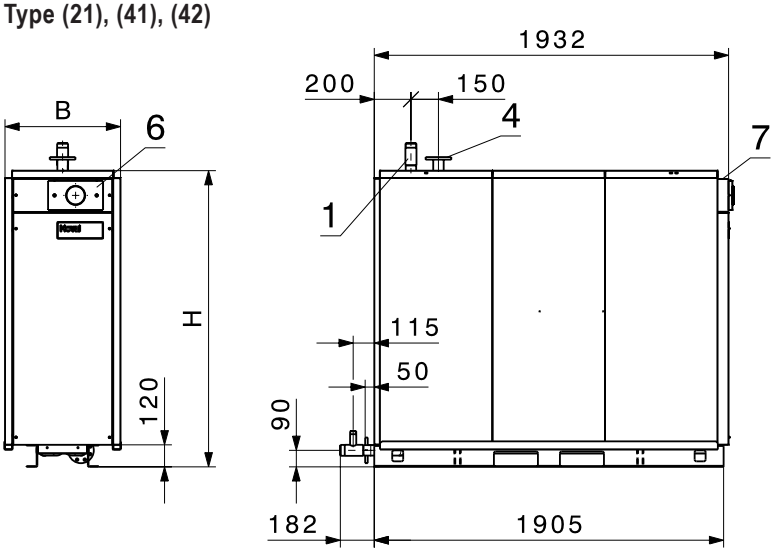

Type (21), (41)

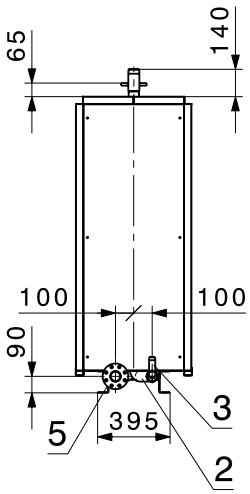

Type (42)

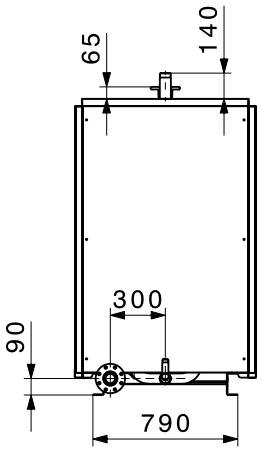

Type (31), (51), (32), (52)

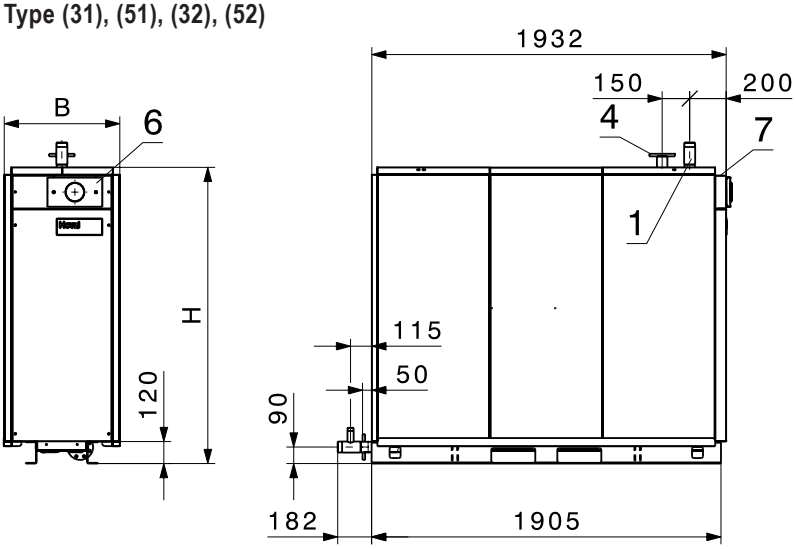

Type (31), (51)

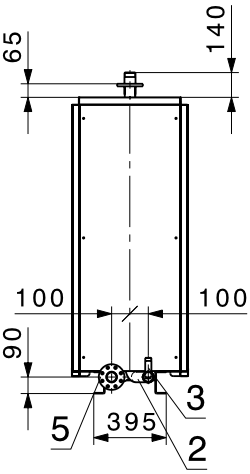

Type (32), (52)

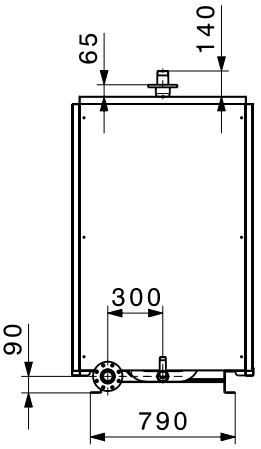

1 Hot water 2″
2 Cold water 2″
3 Circulation 1″
4 Heating flow *
5 Heating return *
6 Control panel
7 Electrical connection

* **Operating pressure 5 bar = standard flanges PN 6 (4 x boreholes d)**
(21 - 51) DN 50
(32 - 52) DN 65

* **Operating pressure 8 & 10 bar = special flanges (8 x boreholes d)**
(21-51) DN 50
(32-52) DN 65

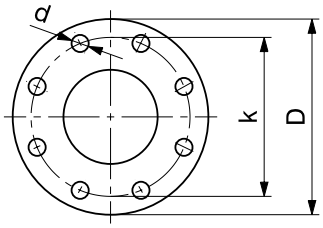

Type	B	H
(21)	630	1615
(31)	630	1615
(41)	630	1800
(51)	630	2160

Type	B	H
(32)	985	1615
(42)	985	1800
(52)	985	2160

	D	k	d
DN 50	140	110	14
DN 65	160	130	14

With adjustable feet, all dimensions +30 mm

Variation because of the production tolerance possible
Dimension +/- 10 mm

Installation on site Modul-plus F (31-52), FH (31-52), F (31-52) S, FH (31-52) S, F (31-52) SM, FH (31-52) SM, FH (31-52) SX

If it is not possible to install the complete calorifier locally, an on-site installation is possible.

- The calorifier is delivered in two parts: module elements incl. base rail and the casing.
- The calorifier is dismantled by Hoval on site, transported into the installation room in individual parts and reassembled there.

More accurate scope of services
see the end of the section

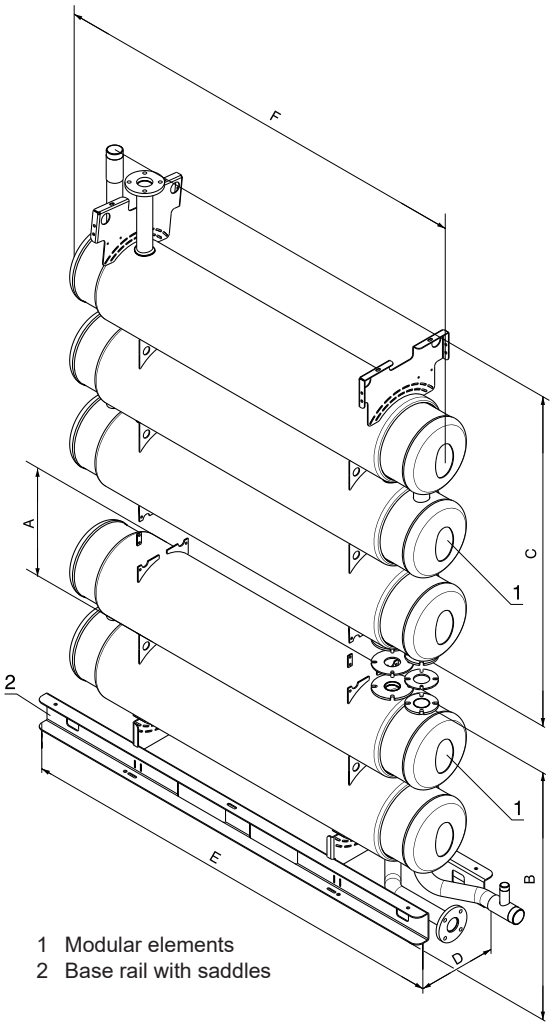

1 Modular elements
2 Base rail with saddles

Dimensions of the separate parts

Modul-plus type	A	B	C	D	E	F
(31) (32)	330	877	878	395 790	1905	1766
(41) (42)	330	877	1063	395 790	1905	1766
(51) (52)	330	877	1423	395 790	1905	1766

Installation on site

Planning hints

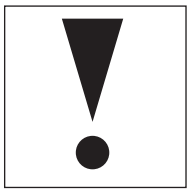

Important preparations

- Old calorifier must be removed.
- The heating room, if necessary with boiler base, must be available with beginning of work.

Water connection
A fresh water connection ¾″, for filling and testing the welded calorifier, must be available in the boiler room.

Calorifier material

- The material is delivered in two parts.
- The calorifier is separated for transporting in on site.

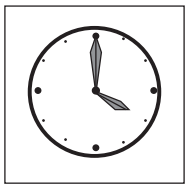

Time schedule

Transport	½ day
Installation on site incl. pressure test	½ day
Installation of casing	½ day

Heating room preparation

Required space
In the heating room sufficient space for the assembly of the calorifier must be available (see space requirement below).

Required space for installation in the boiler room

Min. room dimensions in mm

	(31/32)	(41/42)	(51/52)
Length	2.0	2.0	2.0
Width	1.8	1.8	1.8
Height	2.0	2.0	2.5

Diagram of heating

Calorifier in central heating station

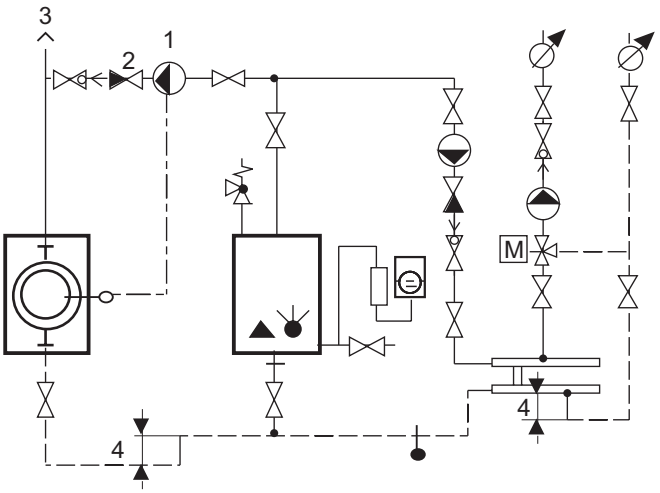

Connection to room heating distance pipe max. 110 °C, 8 bar
(the corresponding plant regulations must be observed in the case of district heating supplies)

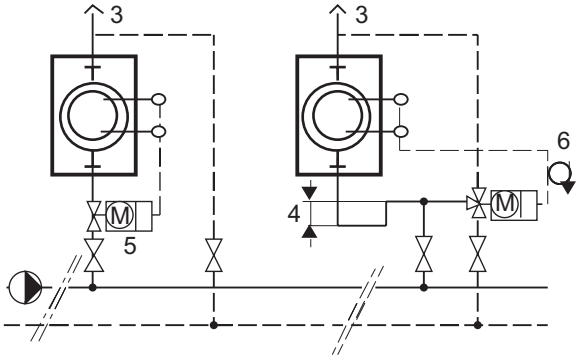

Calorifier in substation

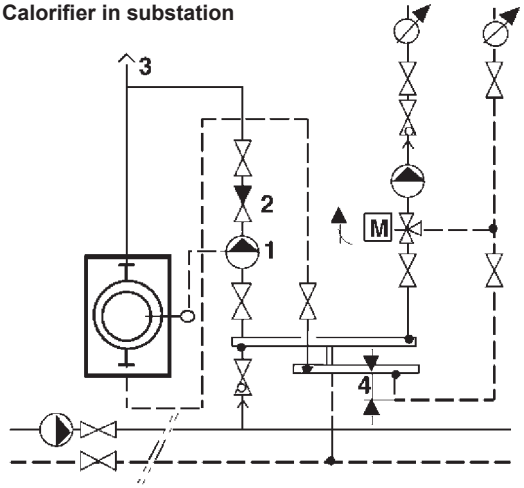

1 Charging pump, controlled by the calorifier temperature control
2 Backflow preventer, tight shut-off
3 Automatic air vent
4 Pocket for avoiding single-pipe gravity circulation. Height at least 3 x pipe diameter
5 Motor through valve operating time max. 2 min., with emergency control function (e.g. spring return)
6 Motor three-way valve operating time max. 2 min., with emergency control function

Diagram of DHW connection

2 calorifiers connected in parallel

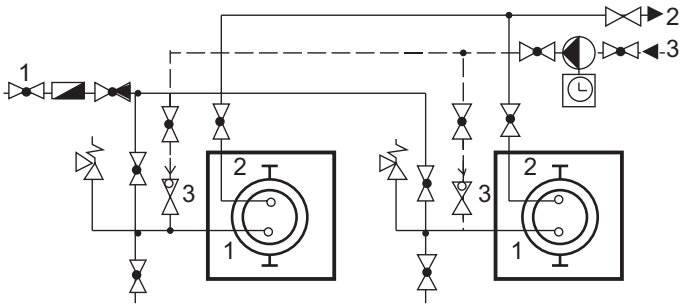

1 = cold water
2 = hot water
3 = circulation

Calorifier charging system
Consisting of:
- calorifier charging module TransTherm® aqua L
- hot water charging tank CombiVal E or CombiVal C (optional)

Calorifier charging module TransTherm® aqua L

- Fully assembled station with plate heat exchanger for the provision of domestic hot water using the tank storage principle
- Intended for wall installation
- The primary side (heating side) contains the three-way valve, high-efficiency pump, air-bleeding, contact sensor and the filling and drain valve, line balancing valve. These components ensure a constant flow temperature at the plate heat exchanger. Pipes made from steel
- The secondary side (DHW side) contains the safety valve (10 bar), non-return valve, filling/drain valves and balancing valve. A flow sensor ensures the correct charging temperature for the hot process water storage tank. Pipes made from stainless steel
- Stainless steel plate heat exchanger 1.4404, copper-soldered or copper-free
- EPP insulation, 30 mm, for the heat exchanger
- Switch-on and switch-off of the charging pump is regulated via two sensors (included in the scope of delivery) in the storage tank.
- Mount tank sensor on the tank on site and connect it to the controller
- T-piece with dummy plug for on-site connection of the circulation group. Connect the pump to the controller on site.
- TopTronic® E control with integrated thermal disinfection of the DHW storage tank (anti-legionella circuit)

Delivery
- The storage tank required is not included in the scope of delivery

On site
- Installation of a circulation unit; the necessary connection is provided.
- Electrical connection of the controller

Suitable hot water charging tanks
see next page

TopTronic® E controller

TopTronic® E basic module district heating/ fresh water
- Control unit for controlling district heating systems in non-communicative networks and the corresponding consumers with integrated control functions for
  - primary valve control
  - cascade management
  - 1 heating/cooling circuit with mixer
  - 1 heating/cooling circuit without mixer
  - 1 hot water charging circuit
  - various additional functions

Range
Calorifier charging module

TransTherm® aqua L type	Output kW
(1-10)	50
(1-16)	90
(1-20)	115
(1-30)	175
(1-40)	230
(1-50)	275

Range
Hot water charging tank

CombiVal E		Content l
(300)	B	301
(500)	B	475
(800)		747
(1000)		968
(1500)		1472
(2000)		2000

CombiVal C		Content l
(200)	B	212
(300)	B	289
(400)	B	411
(500)	B	490
(750)		756
(1000)		990
(1500)		1415
(2000)		1975
(2500)		2450

- Various functions for hot water:
  - selection of different basic programs (week programs, economy mode, holiday until, etc.)
  - various operating modes (e.g. accumulator priority or parallel mode)
  - buffer storage circuit on the primary or secondary side
  - adjustable loading criteria (e.g. adjustable loading times, undershooting the minimum nominal value, etc.)
  - adjustable switch-off criteria (e.g. achieving the setpoint valve, achieving the lower sensor setpoint value, etc.)
  - adjustable loading block (if the loading flow temperature is too low, the setpoint temperature is not reached, differential temperature-dependent solar circuit control)
- Definable switching times for recirculation pump control
- Outdoor sensor
- Immersion sensor (calorifier sensor)
- Contact sensor (flow temperature sensor)
- Complete plug set for DH module
- RPM-regulated pumps

No further module expansions or controller modules can be installed in the control panel!

Option

TopTronic® E control module
- Simple, intuitive operating concept
- Display of the most important operating states
- Configurable start screen
- Operating mode selection
- Configurable day and week programs
- Operation of all connected Hoval CAN bus modules
- Commissioning wizard
- Service and maintenance function
- Fault message management
- Analysis function
- Weather display (with HovalConnect option)
- Adaptation of the heating strategy based on the weather forecast (with HovalConnect option)

Notice
The TopTronic® E control module for operating the basic module district heating/fresh water must be ordered separately!

Further information about the TopTronic® E
see “Controls”

Delivery
- All armatures required for operation, such as flow balancing and shut-off valves, backflow preventer, air-bleeding and drain valve are fitted.

Caution
As a result of thermal disinfection of the domestic hot water for legionella protection, increased water temperatures (at least 65-70 °C) occur. Depending on the water quality, this may result in increased calcification at the installed armatures and heat exchangers and also brings the risk of scalding at the tapping points. Corresponding protective measures must be implemented on site.

CombiVal C (200-2500)

- Charging tank made from stainless steel (without built-in heating coil) for combination with calorifier charging module TransTherm® aqua L
- (200-1000) with one flange
  (1500-2000) with two flanges
  (2500) with one manhole
  in each case with installed dummy flange plate for maintenance or, for types (200-2000), installation of a flange-mounted electric heating element
- Thermal insulation: Neodul® insulation (EPS rigid foam outside and 20 mm polyester fibre fleece inside) with zip, outer jacket made of polypropylene, colour red
  (200-1000) 2-piece
  (1500) 3-piece
  (2000-2500) 4-piece
- Thermometer incl. immersion sleeve loose (packed with the product)
- Sensor terminal bar
- Observe limit values for chloride content in domestic water - see “Engineering”.

Delivery

- (200-1000) charging tank with thermal insulation set completely installed (1500-2500) charging tank, thermal insulation set separately packed

Design on request

- (200-2000) Flange-mounted electric heating element

On site

- Installation of immersion sleeve for thermometer
- (1500-2500) Installation of the thermal installation kit and attachments of the protection rosettes

CombiVal E (300-2000)

- Charging tank made of steel, enamelled inside (without built-in heating coil) for combination with calorifier charging module TransTherm® aqua L
- (300-1000) with one flange
  (1500,2000) with two flanges
  in each case with installed dummy flange plate for maintenance or installation of a flange-mounted electric heating element
- (300-1000) one built-in magnesium protection anode (1500,2000) two built-in magnesium protection anodes
- Thermal insulation made of
  - (300,500) polyurethane rigid foam, directly foamed, with dismantable foil casing, 1-part, red coloured
  - (800-2000) polyester fleece with foil jacket, completely removable, red coloured
    (800-1500) 2-part
    (2000) 3-part
- With thermometer
- (300,500) sensor channel (800-2000) two terminal bars for contact sensor

Delivery

- (300,500) with foil casing completely mounted
- (800-2000) with thermal insulation set completely mounted (removable)

Design on request

- Flange-mounted electric heating element

On site

- Installation of the thermometer
- Attachment of the glue-on protection rosettes to the thermal insulation

Water quality
see end of this brochure

Calorifier charging module

TransTherm® aqua L

Fully assembled station with plate heat exchanger for the provision of domestic hot water using the storage tank charging principle and built-in Hoval TopTronic® E control.
The required storage tank is not supplied.

TransTherm® aqua L	Output kW	Part No.
(1-10)	50	8005 864
(1-16)	90	8005 865
(1-20)	115	8005 866
(1-30)	175	8005 867
(1-40)	230	8005 868
(1-50)	275	8005 869

Version with copper-free heat exchanger

TransTherm® aqua L

with copper-free heat exchanger

TransTherm® aqua L	Output kW	Part No.
(1-10)	50	8006 491
(1-16)	90	8006 492
(1-20)	115	8006 493
(1-30)	175	8006 494
(1-40)	230	8006 495
(1-50)	275	8006 496

Electric heating elements
see chapter “Electric heating elements”

Accessories

Part No.

TopTronic® E control module black with 4.3″ colour touchscreen — 6043 844

For operation of all controller modules connected to the bus system (basic, solar, buffer modules etc.)
Connection to the Hoval bus system via RJ45 plug connection or via plug terminals (max. 0.75 mm²), flat design with flexible installation option
Installation:
- in control panel of the heat generator
- in the Hoval wall casing
- in the control panel front, black high-gloss cover, customer-specific configurable start screen,

Display of current weather or weather forecast (only possible in combination with HovalConnect)

Consisting of:
- TopTronic® E control module black
- Clamping device set control module
- RJ45-RAST 5 CAN cable, L = 500

Return changeover valve set
Consisting of:
- Temperature sensor
- Changeover valve
- Drive (8 sec.)
- Seals
- Screw connections

Nominal diameter	Output kW	kvs m³/h	Part No.
DN 20	50-90	6.3	7010 832
DN 25	115-175	10	7010 836
DN 32	230-275	16	7011 009
DN 40	350	25	7011 025
DN 50	450	40	7016 331
DN 65	580	63	7016 332
DN 80	700	100	7016 333

Notice
When using a circulation set with integration at the heat exchanger (also on-site circulating pump), it is imperative to install a return switching valve set.

Circulation set
for TransTherm® aqua L, F
Piping of parts in contact with domestic water in stainless steel and gunmetal
Consisting of:
- Temperature sensor PT1000
- Recirculation pump Wilo Yonos PARA
- Recirculation pump Wilo Para MAXO
- Regulating valve
- Non-return valve

Connection	Flow rate m³/h	Recirculation pump	Part No.
DN 20 ¾″ Rp	1.9	Z15/7.0 RKC	8005 279
DN 25 1″ Rp	3.4	Z25/180/08/F02	8005 280
DN 32 1¼″ Rp	5.8	Z25/180/08/F02	8005 281

Test valve DN 8 G ¼″ — 2049 861
for TransTherm® aqua L, F, FS
Test valve suitable for flame treatment for hygienic-microbiologic tests.

Part No.

Sludge separator with magnet
MB3/L DN 25...DN 50
Fast and continuous removal of ferromagnetic and non-magnetic dirt and sludge particles.
Sludge separation up to a particle size of 5 µm.
Brass housing
Max. operating pressure: 6 bar
Max. flow temperature: 110 °C

Type	Connection	Flow rate m^3/h at 1 m/s flow speed	Part No.
MB3 DN 25	Rp 1″	2.0	2062 165
MBL DN 32	Rp 1¼″	3.6	2062 166
MBL DN 40	Rp 1½″	5.0	2062 167
MBL DN 50	Rp 2″	7.5	2062 168

Additional sludge separators
see “Various system components”

Temperature monitor 0…120 °C — 2048 299
for TransTherm® aqua L, F, FS

Safety temperature monitor 70…130 °C — 2048 300
for TransTherm® aqua L, F, FS

Safety temperature limiter 70…130 °C — 2049 619
for TransTherm® aqua L, F, FS

Immersion sleeve G ½″ stainless steel for thermostat — 2048 285
for TransTherm® aqua L, F, FS
Installation length = 100 mm
Outer Ø: 8 mm, inner Ø: 6.5 mm

Immersion sleeve G ½″ stainless steel for 2 thermostats — 2048 288
for TransTherm® aqua L, F, FS
Installation length = 100 mm
Outer Ø: 15 mm, inner Ø: 13.5 mm

Hot water charging tank

CombiVal E

Enamelled charging tank
(without heating coil)

CombiVal E (300-1000) with one flange
CombiVal E (1500,2000) with two flanges

- (300,500) thermal insulation mounted with foil casing
- (800-2000) thermal insulation set completely mounted (removable)

CombiVal type		Content l	Part No.
E (300)	B	301	6044 187
E (500)	B	475	6044 188
E (800)		747	6044 189
E (1000)		968	6044 190
E (1500)		1472	6044 191
E (2000)		2000	6044 192

CombiVal C

Stainless steel charging tank
(without heating coil)

CombiVal C (200-1000) with one flange
CombiVal C (1500-2000) with two flanges
CombiVal C (2500) with one manhole
Thermal insulation set

- (200-1000) completely mounted (removable)
- (1500-2000) separately packed

CombiVal type		Content l	Part No.
C (200)	B	212	6049 693
C (300)	B	289	6049 694
C (400)	B	411	6049 695
C (500)	B	490	6049 696
C (750)		756	6049 697
C (1000)		990	6049 698
C (1500)		1415	6049 699
C (2000)		1975	6049 700
C (2500)		2450	6049 701

	Part No.
For CombiVal E (300-2000)	
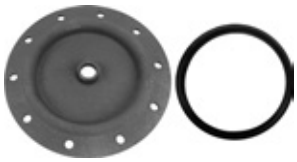 **Flange cover 180 - ¾″** for the installation of the Correx® impressed current anode in flange Ø 180/110 mm, enamelled on the inside with Rp ¾″ sleeve Seal included	2077 035
 **UP 2.3-919** **Kit Correx® impressed current anode** **UP2.3-919-L395/1** for long-term corrosion protection for installation in the enamelled calorifier with reduction R 1¼″ (ET) – Rp 1″ (IT) and R 1″ (ET) – Rp ¾″ (IT) Installation length: 395 mm Connection cable length: 1 x 2000 mm 1 Correx® impressed current anode	684 760
Either a Correx® impressed current anode **or** one/two magnesium anodes may be used.	
For CombiVal C (200-2500)	
 **Flange cover 180 - 1½″** for the installation of the Correx® impressed current anode in flange Ø 180/110 mm, stainless steel with Rp 1½″ sleeve Seal and screws included	2077 911
 **UP 1.9-924** **Kit Correx® impressed current anode** **UP1.9-924-L395/1** for long-term corrosion protection for installation in the stainless steel calorifier with reduction R 1½″ - Rp ¾″ Installation length: 395 mm Connection cable length: 1 x 3500 mm 1 Correx® impressed current anode (up to 800 l)	6031 813
The flange cover 180 - 1½″ must also be ordered for installation of the impressed current anode set.	
Services	
Commissioning Commissioning by works service or Hoval trained authorised serviceman/company is condition for warranty.	
For commissioning and other services please contact your Hoval sales office.	

Performance data

TransTherm® aqua L (1-10 to 1-50)

Domestic water secondary	TransTherm® aqua L		Heating water temperature flow 55 °C (1-...) (10)	(16)	(20)	(30)	(40)	(50)	60 °C (1-...) (10)	(16)	(20)	(30)	(40)	(50)
60/5 °C	T return primary	°C	-	-	-	-	-	-	-	-	-	-	-	-
	V̇ primary	**m³/h**	-	-	-	-	-	-	-	-	-	-	-	-
	Q max.	kW	-	-	-	-	-	-	-	-	-	-	-	-
	V̇ secondary	**m³/h**	-	-	-	-	-	-	-	-	-	-	-	-
60/10 °C	T return primary	°C	-	-	-	-	-	-	-	-	-	-	-	-
	V̇ primary	**m³/h**	-	-	-	-	-	-	-	-	-	-	-	-
	Q max.	kW	-	-	-	-	-	-	-	-	-	-	-	-
	V̇ secondary	**m³/h**	-	-	-	-	-	-	-	-	-	-	-	-
60/15 °C	T return primary	°C	-	-	-	-	-	-	-	-	-	-	-	-
	V̇ primary	**m³/h**	-	-	-	-	-	-	-	-	-	-	-	-
	Q max.	kW	-	-	-	-	-	-	-	-	-	-	-	-
	V̇ secondary	**m³/h**	-	-	-	-	-	-	-	-	-	-	-	-
60/20 °C	T return primary	°C	-	-	-	-	-	-	-	-	-	-	-	-
	V̇ primary	**m³/h**	-	-	-	-	-	-	-	-	-	-	-	-
	Q max.	kW	-	-	-	-	-	-	-	-	-	-	-	-
	V̇ secondary	**m³/h**	-	-	-	-	-	-	-	-	-	-	-	-
55/5 °C	T return primary	°C	-	-	-	-	-	-	30	30	30	30	30	30
	V̇ primary	**m³/h**	-	-	-	-	-	-	**1.25**	**2.04**	**2.51**	**3.71**	**4.76**	**5.66**
	Q max.	kW	-	-	-	-	-	-	43	70	86	127	163	194
	V̇ secondary	**m³/h**	-	-	-	-	-	-	**0.74**	**1.2**	**1.48**	**2.18**	**2.8**	**3.33**
55/10 °C	T return primary	°C	-	-	-	-	-	-	30	30	30	30	30	30
	V̇ primary	**m³/h**	-	-	-	-	-	-	**1.11**	**2.04**	**2.51**	**3.71**	**4.76**	**5.63**
	Q max.	kW	-	-	-	-	-	-	38	70	86	127	163	193
	V̇ secondary	**m³/h**	-	-	-	-	-	-	**0.73**	**1.34**	**1.64**	**2.43**	**3.12**	**3.69**
55/15 °C	T return primary	°C	-	-	-	-	-	-	30	30	30	30	30	30
	V̇ primary	**m³/h**	-	-	-	-	-	-	**0.76**	**1.46**	**1.95**	**3.06**	**4.23**	**5.4**
	Q max.	kW	-	-	-	-	-	-	26	50	67	105	145	185
	V̇ secondary	**m³/h**	-	-	-	-	-	-	**0.56**	**1.08**	**1.44**	**2.26**	**3.12**	**3.98**
55/20 °C	T return primary	°C	-	-	-	-	-	-	30	30	30	30	30	30
	V̇ primary	**m³/h**	-	-	-	-	-	-	**0.47**	**0.9**	**1.17**	**1.9**	**2.63**	**3.36**
	Q max.	kW	-	-	-	-	-	-	16	31	40	65	90	115
	V̇ secondary	**m³/h**	-	-	-	-	-	-	**0.39**	**0.76**	**0.99**	**1.6**	**2.22**	**2.83**
50/5 °C	T return primary	°C	30	30	30	30	30	30	30	30	30	30	30	30
	V̇ primary	**m³/h**	**1.29**	**2.03**	**2.51**	**3.67**	**4.72**	**5.66**	**1.28**	**2.04**	**2.51**	**3.71**	**4.76**	**5.63**
	Q max.	kW	37	58	72	105	135	162	44	70	86	127	163	193
	V̇ secondary	**m³/h**	**0.71**	**1.11**	**1.37**	**2**	**2.58**	**3.09**	**0.84**	**1.34**	**1.64**	**2.43**	**3.12**	**3.69**
50/10 °C	T return primary	°C	30	30	30	30	30	30	30	30	30	30	30	30
	V̇ primary	**m³/h**	**1.29**	**2.03**	**2.51**	**3.67**	**4.72**	**5.66**	**1.28**	**2.04**	**2.51**	**3.73**	**4.81**	**5.69**
	Q max.	kW	38	58	72	105	135	162	44	70	86	128	165	195
	V̇ secondary	**m³/h**	**0.82**	**1.25**	**1.77**	**2.26**	**2.9**	**3.48**	**0.95**	**1.51**	**1.85**	**2.75**	**3.55**	**4.19**
50/15 °C	T return primary	°C	30	30	30	30	30	30	30	30	30	30	30	30
	V̇ primary	**m³/h**	**1.29**	**2.03**	**2.51**	**3.67**	**4.72**	**5.66**	**1.11**	**1.95**	**2.48**	**3.76**	**4.76**	**5.69**
	Q max.	kW	37	58	72	105	135	162	38	67	85	129	163	195
	V̇ secondary	**m³/h**	**0.91**	**1.43**	**1.77**	**2.58**	**3.32**	**3.99**	**0.94**	**1.65**	**2.09**	**3.18**	**4.01**	**4.8**
50/20 °C	T return primary	°C	30	30	30	30	30	30	30	30	30	30	30	30
	V̇ primary	**m³/h**	**1.15**	**2.03**	**2.55**	**3.7**	**4.75**	**5.69**	**0.96**	**1.69**	**2.13**	**3.24**	**3.63**	**5.16**
	Q max.	kW	33	58	73	106	136	163	33	58	73	111	145	177
	V̇ secondary	**m³/h**	**0.95**	**1.67**	**2.1**	**3.05**	**3.91**	**4.69**	**0.95**	**1.67**	**2.1**	**3.19**	**4.17**	**5.09**

T return primary	°C	Temperature primary return
V̇ primary	**m³/h**	Flow rate primary
Q max.	kW	Output
V̇ secondary	**m³/h**	Flow rate secondary

The specified technical data relate to the full load of the module in each case.

Performance data

TransTherm® aqua L (1-10 to 1-50)

Domestic water secondary	TransTherm® aqua L		Heating water temperature flow 65 °C (1-...) (10)	(16)	(20)	(30)	(40)	(50)	70 °C (1-...) (10)	(16)	(20)	(30)	(40)	(50)
60/5 °C	T return primary	°C	30	30	30	30	30	30	30	30	30	30	30	30
	V̇ primary	**m³/h**	**1.08**	**1.88**	**2.5**	**3.73**	**4.84**	**5.77**	**1.32**	**2.09**	**2.59**	**3.76**	**4.82**	**5.72**
	Q max.	kW	43	75	100	149	193	230	60	95	118	171	219	260
	V̇ secondary	**m³/h**	**0.67**	**1.17**	**1.55**	**2.33**	**3.01**	**3.59**	**0.94**	**1.48**	**1.84**	**2.67**	**3.42**	**4.06**
60/10 °C	T return primary	°C	30	30	30	30	30	30	30	30	30	30	30	30
	V̇ primary	**m³/h**	**0.8**	**1.5**	**2.01**	**3.16**	**4.34**	**5.39**	**1.08**	**1.94**	**2.48**	**3.77**	**4.95**	**5.92**
	Q max.	kW	32	60	80	126	173	215	50	90	115	175	230	275
	V̇ secondary	**m³/h**	**0.55**	**1.03**	**1.38**	**2.17**	**2.98**	**3.7**	**0.86**	**1.54**	**1.98**	**3.01**	**3.95**	**4.73**
60/15 °C	T return primary	°C	30	30	30	30	30	30	30	30	30	30	30	30
	V̇ primary	**m³/h**	**0.55**	**1.05**	**1.38**	**2.13**	**3.08**	**3.96**	**0.97**	**1.8**	**2.37**	**3.73**	**4.84**	**5.72**
	Q max.	kW	22	42	55	85	123	158	44	82	108	170	220	260
	V̇ secondary	**m³/h**	**0.42**	**0.8**	**1.05**	**1.63**	**2.35**	**3.02**	**0.84**	**1.57**	**2.08**	**3.24**	**4.21**	**4.98**
60/20 °C	T return primary	°C	30	30	30	30	30	30	30	30	30	30	30	30
	V̇ primary	**m³/h**	**0.3**	**0.6**	**0.8**	**1.28**	**1.75**	**2.33**	**0.62**	**1.14**	**2.05**	**2.4**	**3.43**	**4.22**
	Q max.	kW	12	24	32	51	70	93	28	52	68	109	156	192
	V̇ secondary	**m³/h**	**0.26**	**0.52**	**0.69**	**1.1**	**1.51**	**2**	**0.6**	**1.12**	**1.47**	**2.36**	**3.36**	**4.14**
55/5 °C	T return primary	°C	30	30	30	30	30	30	30	30	30	30	30	30
	V̇ primary	**m³/h**	**0.8**	**1.5**	**2.01**	**3.16**	**4.34**	**5.39**	**1.08**	**2.09**	**2.53**	**3.74**	**4.84**	**5.76**
	Q max.	kW	32	60	80	126	173	215	50	95	115	170	220	262
	V̇ secondary	**m³/h**	**0.55**	**1.03**	**1.38**	**2.17**	**2.98**	**3.7**	**0.86**	**1.63**	**1.97**	**2.92**	**3.78**	**4.5**
55/10 °C	T return primary	°C	30	30	30	30	30	30	30	30	30	30	30	30
	V̇ primary	**m³/h**	**1.3**	**2.06**	**2.53**	**3.71**	**4.81**	**5.64**	**1.08**	**1.87**	**2.42**	**3.74**	**4.84**	**5.72**
	Q max.	kW	52	82	101	148	192	225	49	85	110	170	220	260
	V̇ secondary	**m³/h**	**0.99**	**1.57**	**1.93**	**2.83**	**3.67**	**4.3**	**0.94**	**1.62**	**2.1**	**3.24**	**4.21**	**4.98**
55/15 °C	T return primary	°C	30	30	30	30	30	30	30	30	30	30	30	30
	V̇ primary	**m³/h**	**0.97**	**1.65**	**2.11**	**3.71**	**4.81**	**5.64**	**1.1**	**1.88**	**2.41**	**3.74**	**4.22**	**5.1**
	Q max.	kW	44	75	96	148	192	225	44	75	96	148	192	232
	V̇ secondary	**m³/h**	**0.95**	**1.61**	**2.07**	**3.19**	**4.13**	**4.84**	**0.94**	**1.62**	**2.1**	**3.19**	**4.21**	**5**
55/20 °C	T return primary	°C	30	30	30	30	30	30	30	30	30	30	30	30
	V̇ primary	**m³/h**	**0.95**	**1.68**	**2.13**	**3.23**	**4.24**	**5.14**	**0.84**	**1.47**	**1.87**	**2.84**	**3.72**	**4.51**
	Q max.	kW	38	67	85	129	169	205	38	67	85	129	169	205
	V̇ secondary	**m³/h**	**0.94**	**1.65**	**2.09**	**3.18**	**4.16**	**5.05**	**0.94**	**1.65**	**2.09**	**3.18**	**4.16**	**5.05**
50/5 °C	T return primary	°C	30	30	30	30	30	30	30	30	30	30	30	30
	V̇ primary	**m³/h**	**1.25**	**2.06**	**2.53**	**3.71**	**4.81**	**5.64**	**1.08**	**1.87**	**2.42**	**3.56**	**4.84**	**5.72**
	Q max.	kW	50	82	101	148	192	225	49	85	110	162	220	260
	V̇ secondary	**m³/h**	**0.95**	**1.57**	**1.93**	**2.83**	**3.67**	**4.3**	**0.94**	**1.62**	**2.1**	**3.09**	**4.21**	**4.98**
50/10 °C	T return primary	°C	30	30	30	30	30	30	30	30	30	30	30	30
	V̇ primary	**m³/h**	**1.1**	**1.88**	**2.41**	**3.71**	**4.81**	**5.64**	**0.97**	**1.65**	**2.11**	**3.25**	**4.22**	**5.1**
	Q max.	kW	44	75	96	148	192	225	44	75	96	148	192	232
	V̇ secondary	**m³/h**	**0.95**	**1.61**	**2.07**	**3.19**	**4.13**	**4.84**	**0.95**	**1.61**	**2.07**	**3.19**	**4.13**	**5**
50/15 °C	T return primary	°C	30	30	30	30	30	30	30	30	30	30	30	30
	V̇ primary	**m³/h**	**0.95**	**1.68**	**2.13**	**3.23**	**4.24**	**5.14**	**0.84**	**1.47**	**1.87**	**2.84**	**3.72**	**4.51**
	Q max.	kW	38	67	85	129	169	205	38	67	85	129	169	205
	V̇ secondary	**m³/h**	**0.94**	**1.65**	**2.09**	**3.18**	**4.16**	**5.05**	**0.94**	**1.65**	**2.09**	**3.18**	**4.16**	**5.05**
50/20 °C	T return primary	°C	30	30	30	30	30	30	30	30	30	30	30	30
	V̇ primary	**m³/h**	**0.83**	**1.45**	**1.81**	**2.44**	**3.63**	**4.44**	**0.73**	**1.28**	**1.61**	**2.44**	**3.19**	**3.89**
	Q max.	kW	33	58	73	111	145	177	33	58	73	111	145	177
	V̇ secondary	**m³/h**	**0.95**	**1.67**	**2.1**	**3.19**	**4.17**	**5.09**	**0.95**	**1.67**	**2.1**	**3.19**	**4.17**	**5.09**

T return primary	°C	Temperature primary return
V̇ primary	**m³/h**	Flow rate primary
Q max.	kW	Output
V̇ secondary	**m³/h**	Flow rate secondary

The specified technical data relate to the full load of the module in each case.

Performance data

TransTherm® aqua L (1-10 to 1-50)

Temperature primary 70 °C flow/30 °C return

Domestic water heating

			Cold water 10 °C Domestic water 60 °C					
		TransTherm® aqua L	(10)	(16)	(20)	(30)	(40)	(50)
		kW	50	90	115	175	230	275
		m³/h	0.86	1.54	1.97	3.00	3.94	4.71
		l/min	14.3	25.7	32.9	50.0	65.7	78.6
		l/s	0.2	0.4	0.5	0.8	1.1	1.3
Tank size l								
200	**V̇s**	**l/10 min**	343	457	529	-	-	-
	Hourly output	l/h at 60 °C	1057	1743	2171	-	-	-
	NL index		13	22	29	-	-	-
300	**V̇s**	**l/10 min**	443	557	629	800	-	-
	Hourly output	l/h at 60 °C	1157	1843	2271	3300	-	-
	NL index		21	31	39	57	-	-
400	**V̇s**	**l/10 min**	543	657	729	900	-	-
	Hourly output	l/h at 60 °C	1257	1943	2371	3400	-	-
	NL index		23	41	49	69	-	-
500	**V̇s**	**l/10 min**	643	757	829	1000	1157	-
	Hourly output	l/h at 60 °C	1357	2043	2471	3500	4443	-
	NL index		25	44	56	80	100	-
800	**V̇s**	**l/10 min**	943	1057	1129	1300	1457	-
	Hourly output	l/h at 60 °C	1657	2343	2771	3800	4743	-
	NL index		33	52	64	94	123	-
1000	**V̇s**	**l/10 min**	1143	1257	1329	1500	1657	1786
	Hourly output	l/h at 60 °C	1857	2543	2971	4000	4943	5714
	NL index		38	57	69	100	128	152
1500	**V̇s**	**l/10 min**	-	1757	1829	2000	2157	2286
	Hourly output	l/h at 60 °C	-	3043	3471	4500	5443	6214
	NL index		-	71	83	114	143	167
2000	**V̇s**	**l/10 min**	-	2257	2329	2500	2657	2786
	Hourly output	l/h at 60 °C	-	3543	3971	5000	5943	6714
	NL index		-	84	97	128	158	182
2500	**V̇s**	**l/10 min**	-	2757	2829	3000	3157	3286
	Hourly output	l/h at 60 °C	-	4043	4471	5500	6443	7214
	NL index		-	99	115	144	174	198

V̇s **l/10 min** 10 minutes peak flow rate at 60 °C

NL index Performance figure in accordance with DIN 4708 = number of flats which can be supplied with domestic hot water when the calorifier is heated and permanently reheated with the heat generator (standard flat: 1 bath - 4 rooms - 3.5 persons)

Performance data

TransTherm® aqua L (1-10 to 1-50)

Tapping point (mixing temperature)

			Cold water 10 °C Domestic water 45 °C					
		TransTherm® aqua L	(10)	(16)	(20)	(30)	(40)	(50)
		kW	50	90	115	175	230	275
		m³/h	1.22	2.20	2.82	4.29	5.63	6.73
		l/min	20.4	36.7	46.9	71.4	93.9	112.2
		l/s	0.3	0.6	0.8	1.2	1.6	1.9
Tank size l								
200	**V̇s**	**l/10 min**	490	653	755	-	-	-
	Hourly output	l/h at 45 °C	1510	2490	3102	-	-	-
	NL index		13	22	29	-	-	-
300	**V̇s**	**l/10 min**	633	796	898	1143	-	-
	Hourly output	l/h at 45 °C	1653	2633	3245	4714	-	-
	NL index		21	31	39	57	-	-
400	**V̇s**	**l/10 min**	776	939	1041	1286	-	-
	Hourly output	l/h at 45 °C	1796	2776	3388	4857	-	-
	NL index		23	41	49	69	-	-
500	**V̇s**	**l/10 min**	918	1082	1184	1429	1653	-
	Hourly output	l/h at 45 °C	1939	2918	3531	5000	6347	-
	NL index		25	44	56	80	100	-
800	**V̇s**	**l/10 min**	1347	1510	1612	1857	2082	-
	Hourly output	l/h at 45 °C	2367	3347	3959	5429	6776	-
	NL index		33	52	64	94	123	-
1000	**V̇s**	**l/10 min**	1633	1796	1898	2143	2367	2551
	Hourly output	l/h at 45 °C	2653	3633	4245	5714	7061	8163
	NL index		38	57	69	100	128	152
1500	**V̇s**	**l/10 min**	-	2510	2612	2857	3082	3265
	Hourly output	l/h at 45 °C	-	4347	4959	6429	7776	8878
	NL index		-	71	83	114	143	167
2000	**V̇s**	**l/10 min**	-	3224	3327	3571	3796	3980
	Hourly output	l/h at 45 °C	-	5061	5673	7143	8490	9592
	NL index		-	84	97	128	158	182
2500	**V̇s**	**l/10 min**	-	3939	4041	4286	4510	4694
	Hourly output	l/h at 45 °C	-	5776	6388	7857	9204	10306
	NL index		-	99	115	144	174	198

V̇s **l/10 min** 10 minutes peak flow rate at 45 °C

NL index Performance figure in accordance with DIN 4708 = number of flats which can be supplied with domestic hot water when the calorifier is heated and permanently reheated with the heat generator (standard flat: 1 bath - 4 rooms - 3.5 persons)

Hot water charging tank CombiVal E (300-2000)

Type		(300)	(500)	(800)	(1000)	(1500)	(2000)
• Volume	dm^3	301	475	747	968	1472	2000
• Max. operating pressure/test pressure	bar	10/13	10/13	10/13	10/13	10/13	10/13
• Max. DHW temperature	°C	95	95	95	95	95	95
• Thermal insulation		PU hard foam			polyester fleece		
	mm	75	75	100	100	120	120
• Thermal insulation λ	W/mK	0.027	0.027	0.040	0.040	0.040	0.040
• Fire protection class		B2	B2	B2	B2	B2	B2
• Heat loss at 65 °C	W	58	75	128	139	170	190
• Transport weight	kg	97	126	205	264	400	600
• U value	W/m^2K	0.290	0.303	0.381	0.362	0.339	0.325

Hot water charging tank CombiVal C (200-2500)

Type		(200)	(300)	(400)	(500)	(750)	(1000)	(1500)	(2000)	(2500)
• Volume	dm^3	212	289	411	490	756	990	1415	1975	2450
• Max. operating pressure/test pressure	bar	6/12	6/12	6/12	6/12	6/12	6/12	6/12	6/12	6/12
• Max. DHW temperature	°C	95	95	95	95	95	95	95	95	95
• Thermal insulation		Neodul® insulation (EPS rigid foam outside and polyester fibre fleece inside)								
	mm	100	100	100	100	100	100	120	120	120
• Thermal insulation λ	W/mK	0.0316	0.0316	0.0316	0.0316	0.0316	0.0316	0.0316	0.0316	0.0316
• Fire protection class		B2	B2	B2	B2	B2	B2	B2	B2	B2
• Heat loss at 65 °C	W	62	68	77	82	120	140	162	180	206
• Transport weight	kg	55	70	83	85	119	150	215	265	445
• U value	W/m^2K	0.329	0.329	0.329	0.329	0.329	0.329	0.273	0.273	0.273

Charging module TransTherm® aqua L (1-10)

(Dimensions in mm)

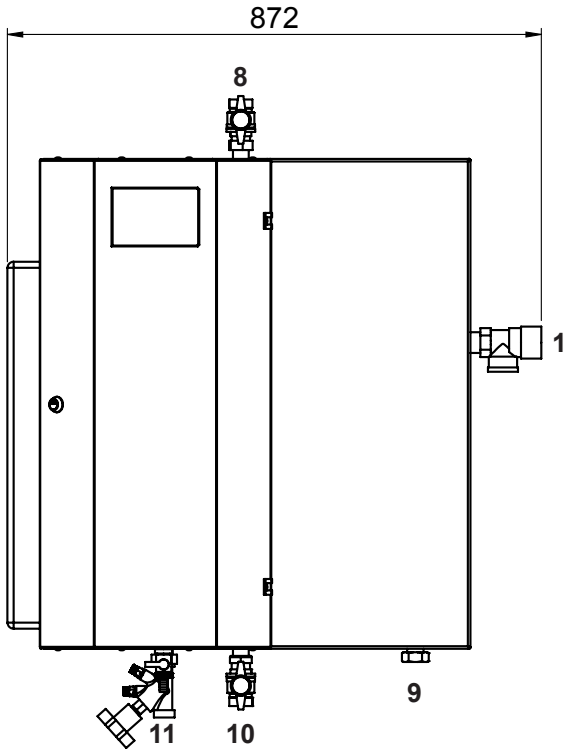

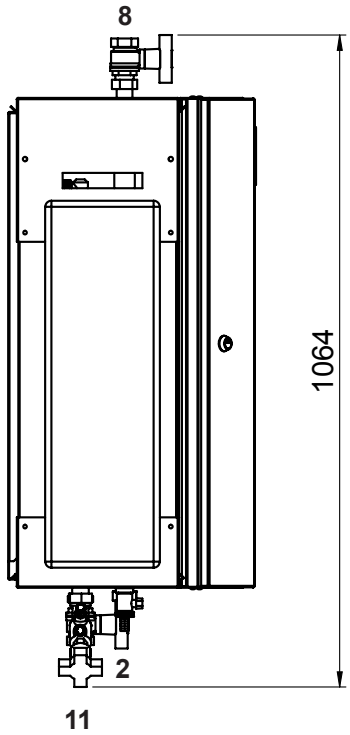

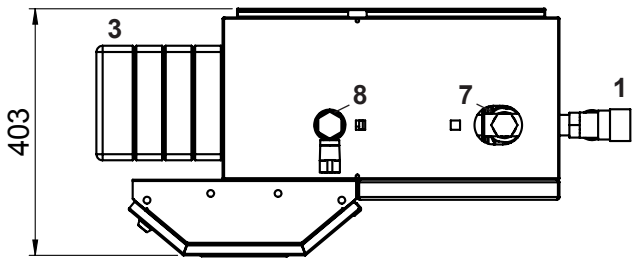

1 Safety valve
Hot water 10 bar
2 Filling/drain valve
3 Heat exchanger

		(1-10)
7	Circulation	DN 25, Rp 1″ (20, Rp ¾″) (IT)
8	Hot water	DN 25, Rp 1″ (IT)
9	Cold water	DN 20, Gp 1″ (IT)
10	Flow heating water	DN 25, Rp 1″ (IT)
11	Return heating water	DN 25, Gp 1″ (IT)

TransTherm® aqua L	Weight in kg
(1-10)	56

Gp = straight internal thread

Charging module TransTherm® aqua L (1-10)

(Dimensions in mm)

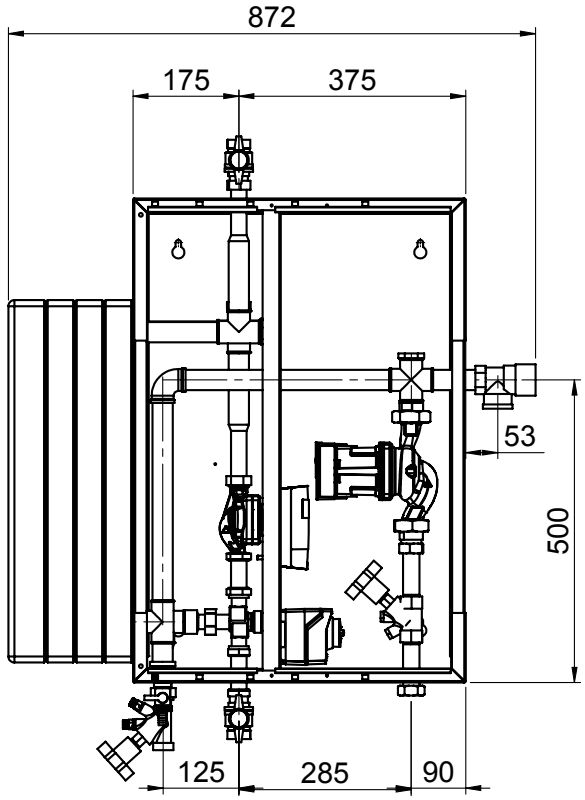

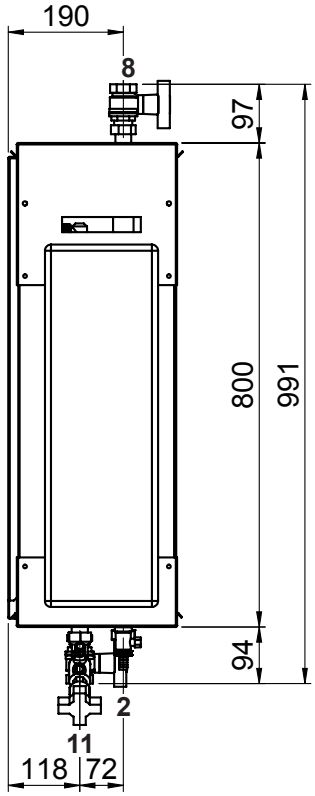

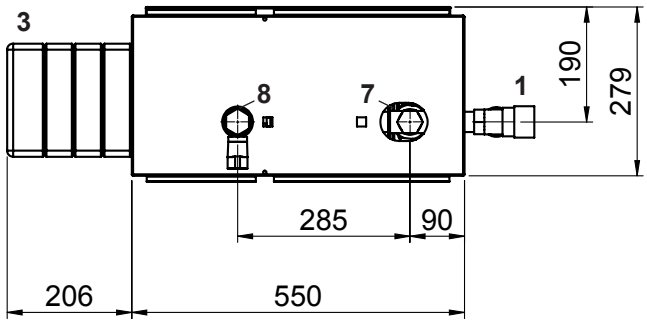

Version incl. circulation set

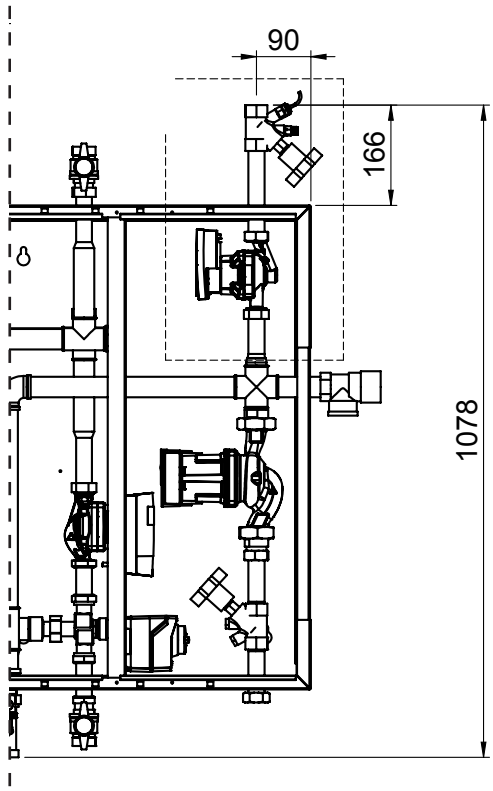

		(1-10)
1	Safety valve Hot water 10 bar	
2	Filling/drain valve	
3	Heat exchanger	
4	Primary three-way valve	
5	Primary circulating pump	
6	Secondary circulating pump	
7	Circulation	DN 25, Rp 1″ (20, Rp ¾″) (IT)
8	Hot water	DN 25, Rp 1″ (IT)
9	Cold water	DN 20, Gp 1″ (IT)
10	Flow heating water	DN 25, Rp 1″ (IT)
11	Return heating water	DN 25, Gp 1″ (IT)

Gp = straight internal thread

Charging module TransTherm® aqua L (1-16, 1-20)

(Dimensions in mm)

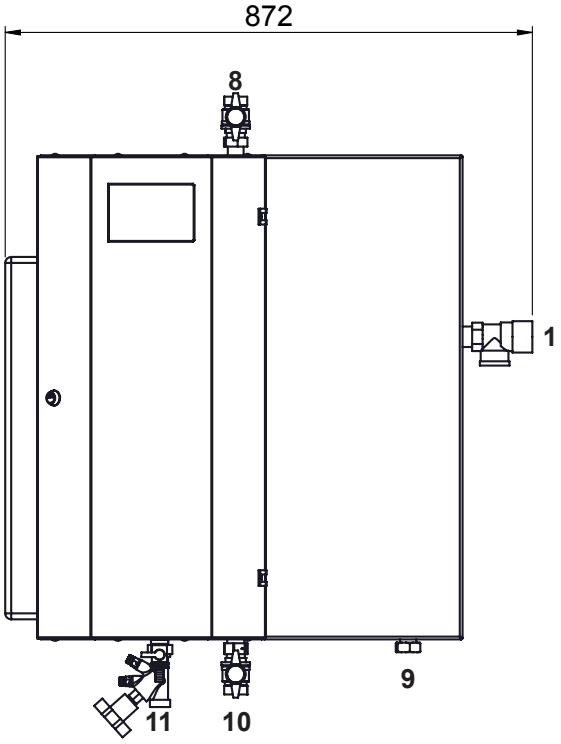

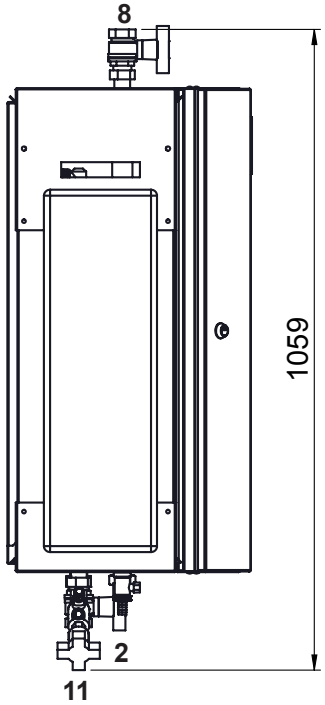

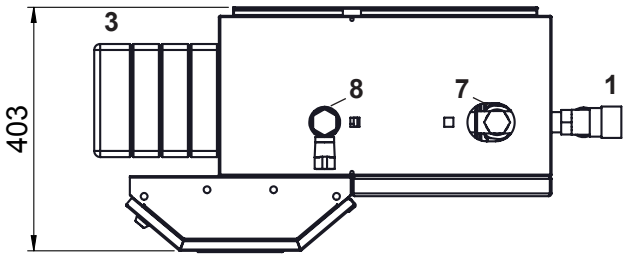

1 Safety valve
Hot water 10 bar
2 Filling/drain valve
3 Heat exchanger

		(1-16) (1-20)
7	Circulation	DN 25, Rp 1″ (20, Rp ¾″) (IT)
8	Hot water	DN 25, Rp 1″ (IT)
9	Cold water	DN 20, Gp 1″ (IT)
10	Flow heating water	DN 25, Rp 1″ (IT)
11	Return heating water	DN 25, Gp 1″ (IT)

TransTherm® aqua L	Weight in kg
(1-16)	58
(1-20)	60

Gp = straight internal thread

Charging module TransTherm® aqua L (1-16, 1-20)

(Dimensions in mm)

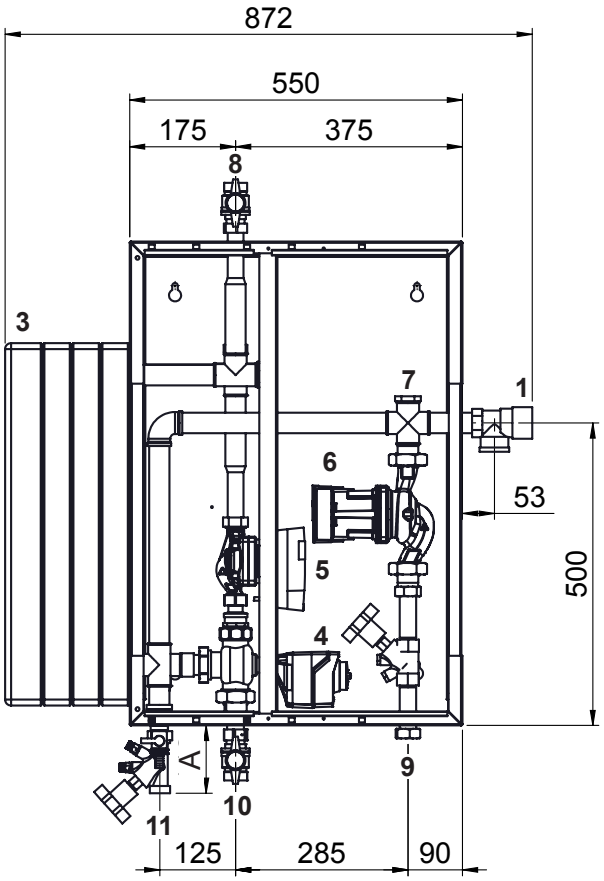

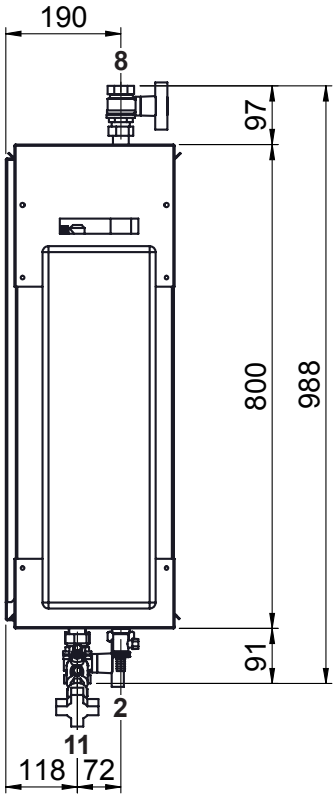

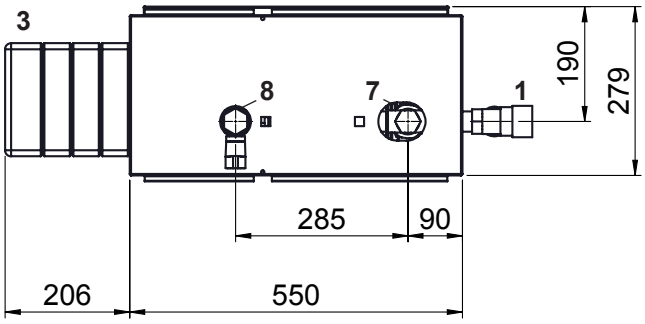

Version incl. circulation set

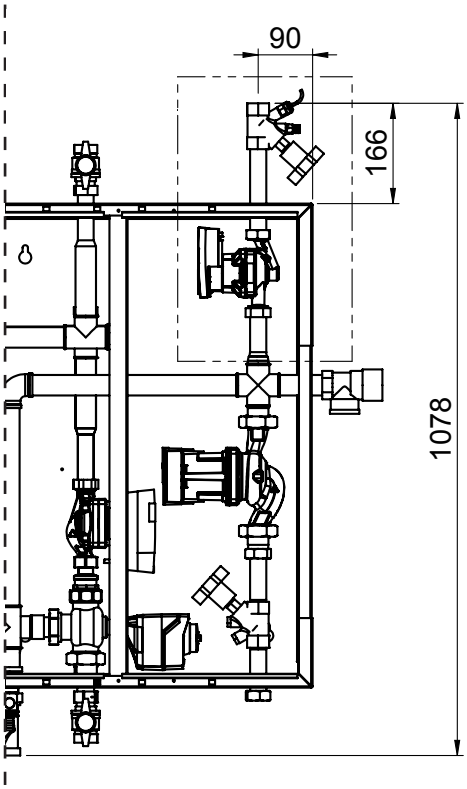

1 Safety valve
Hot water 10 bar
2 Filling/drain valve
3 Heat exchanger
4 Three-way valve primary
5 Primary circulating pump
6 Secondary circulating pump

		(1-16) (1-20)
7	Circulation	DN 25, Rp 1″ (20, Rp ¾″) (IT)
8	Hot water	DN 25, Rp 1″ (IT)
9	Cold water	DN 20, Gp 1″ (IT)
10	Flow heating water	DN 25, Rp 1″ (IT)
11	Return heating water	DN 25, Gp 1″ (IT)

	A	B	C
(1-16)	112	166	1078
(1-20)	128	193	1121

Gp = straight internal thread

Charging module TransTherm® aqua L (1-30 to 1-50)

(Dimensions in mm)

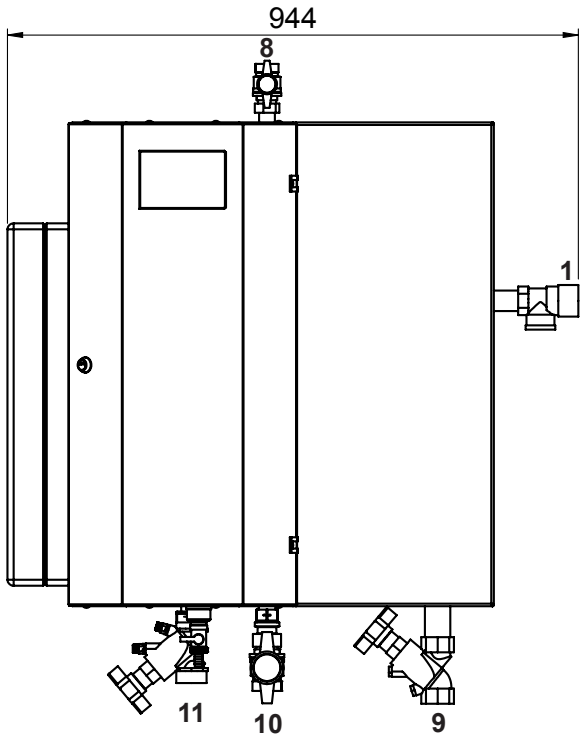

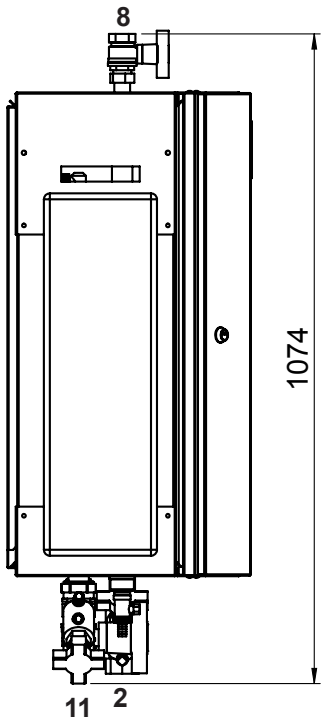

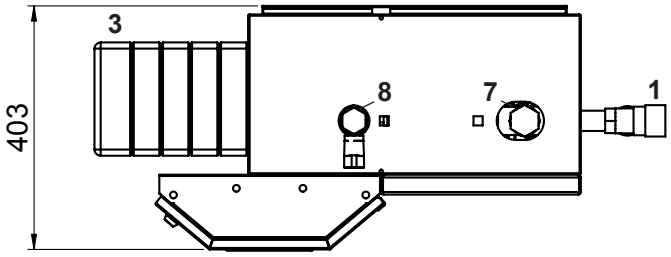

1	Safety valve Hot water 10 bar	
2	Filling/drain valve	
3	Heat exchanger	
		(1-30) (1-40) (1-50)
7	Circulation	DN 32, Rp 1¼″ (25, Rp 1″) (20, Rp ¾″) (IT)
8	Hot water	DN 32, Rp 1¼″ (IT)
9	Cold water	DN 32, Rp 1¼″ (IT)
10	Flow heating water	DN 32, Rp 1¼″ (IT)
11	Return heating water	DN 32, Gp 1½″ (IT)

TransTherm® aqua L	Weight in kg
(1-30)	66
(1-40)	68
(1-50)	70

Gp = straight internal thread

Charging module TransTherm® aqua L (1-30 to 1-50)

(Dimensions in mm)

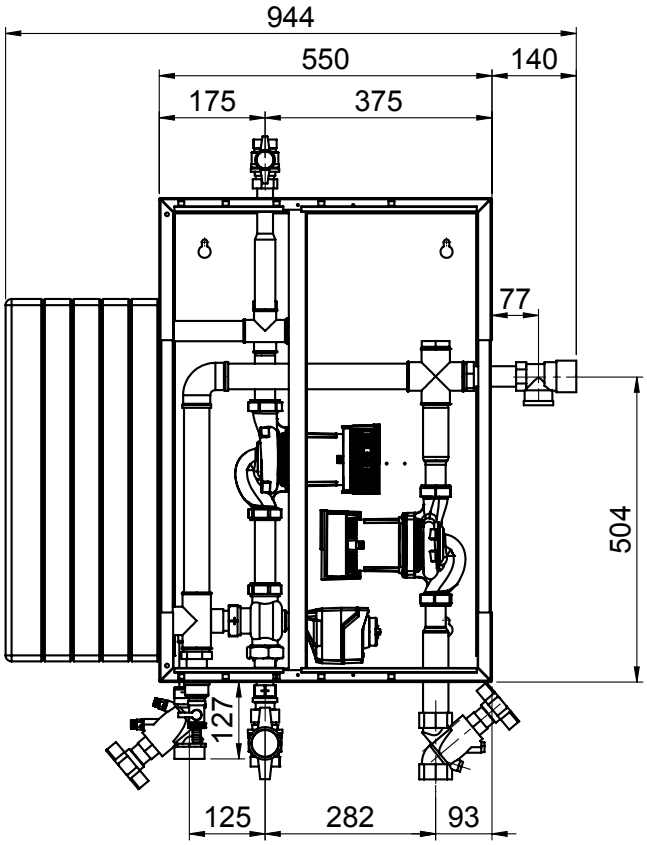

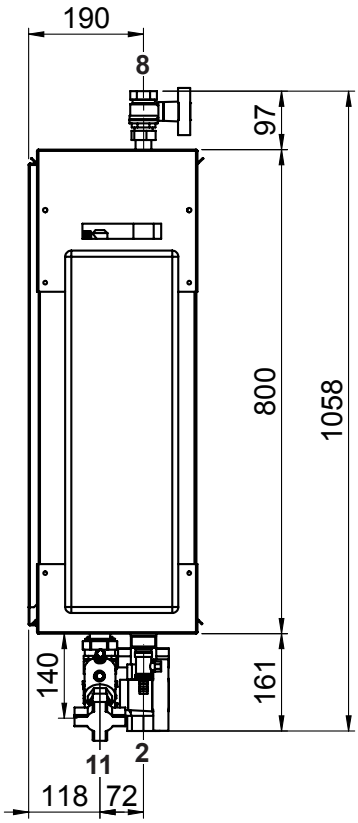

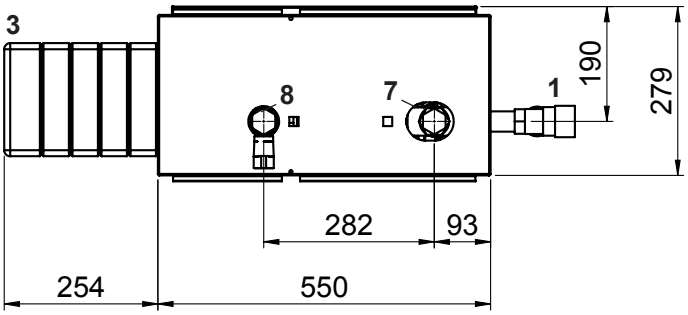

Version incl. circulation set

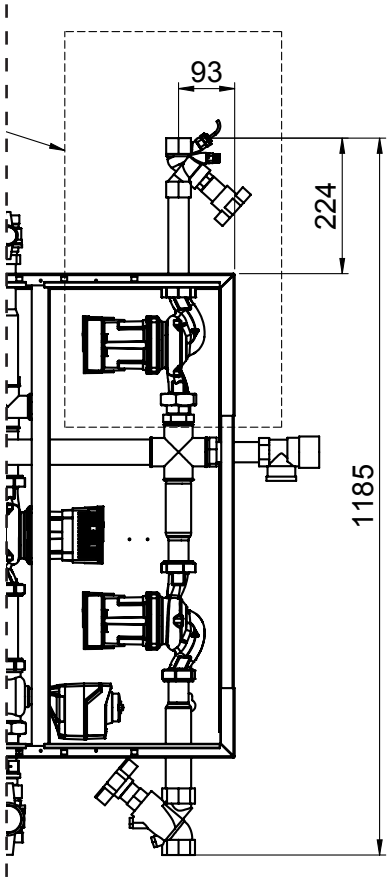

1 Safety valve
Hot water 10 bar
2 Filling/drain valve
3 Heat exchanger
4 Primary three-way valve
5 Primary circulating pump
6 Secondary circulating pump

		(1-30) (1-40) (1-50)
7	Circulation	DN 32, Rp 1¼″ (25, Rp 1″) (20, Rp ¾″) (IT)
8	Hot water	DN 32, Rp 1¼″ (IT)
9	Cold water	DN 32, Rp 1¼″ (IT)
10	Flow heating water	DN 32, Rp 1¼″ (IT)
11	Return heating water	DN 32, Gp 1½″ (IT)

Gp = straight internal thread

CombiVal E (300,500)
(Dimensions in mm)

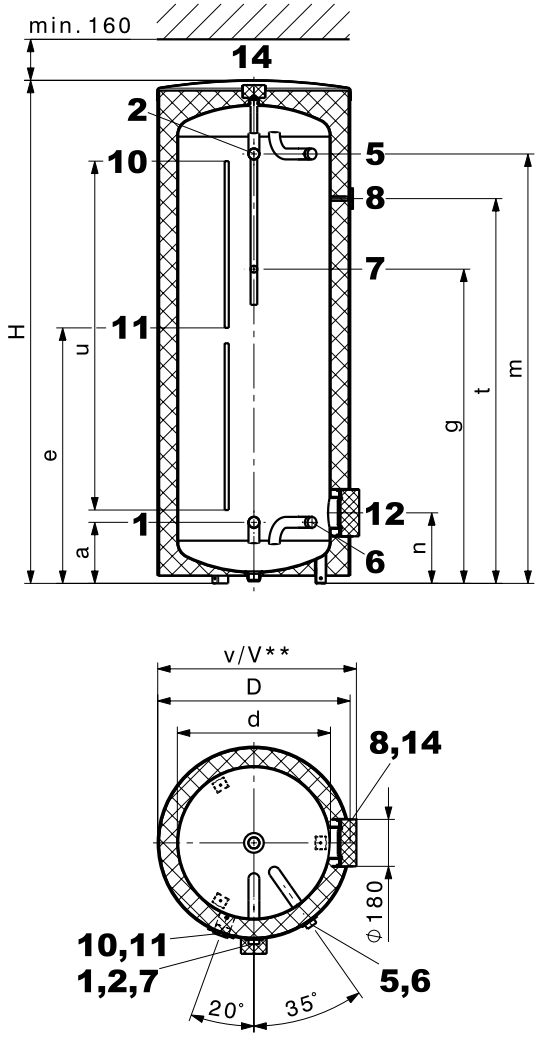

CombiVal E (800-2000)

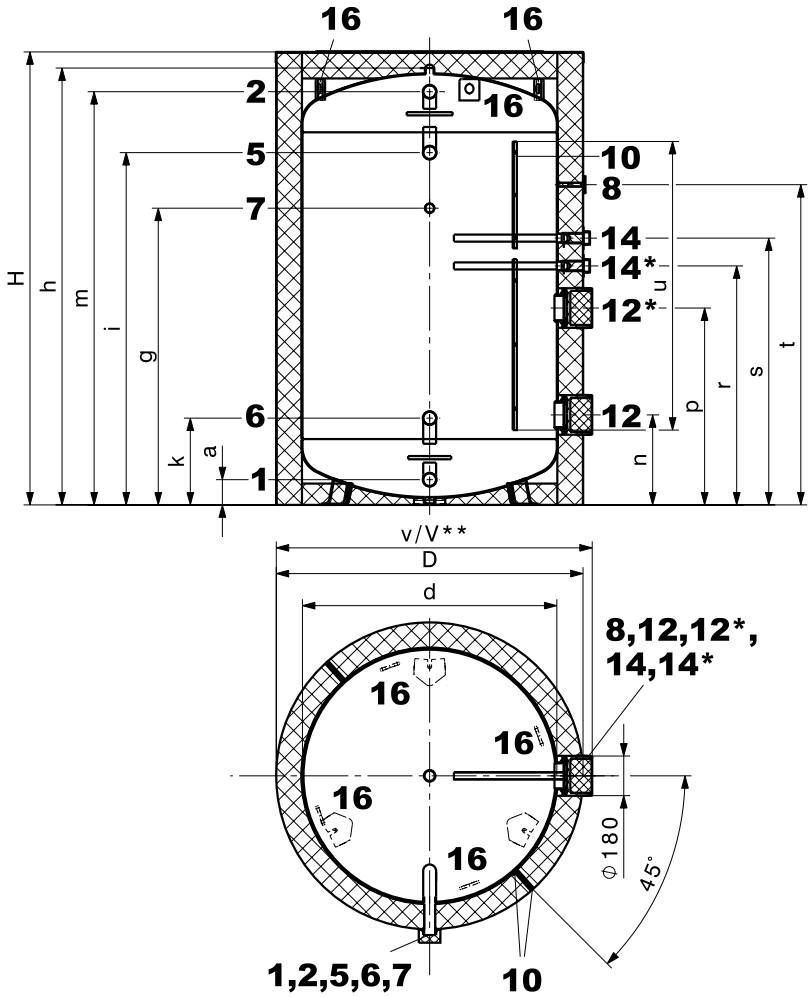

1	Cold water (charging return)	type (300,500)	G 1¼″	(ET)
		type (800-2000)	G 2″	(ET)
2	Domestic hot water	type (300,500)	G 1¼″	(ET)
		type (800-2000)	G 2″	(ET)
5	Charging flow – hot	type (300,500)	G 1¼″	(ET)
		type (800-2000)	G 2″	(ET)
6	Charging return – cold	type (300,500)	G 1¼″	(ET)
		type (800-2000)	G 2″	(ET)
7	Circulation (removable insulated cap Ø 100 mm)	type (300,500)	G ¾″	(ET)
		type (800-2000)	G 1¼″	(ET)

Variation because of the production tolerance possible
Dimension +/- 10 mm

8	Thermometer			
10	Sensor channel, inner Ø 11 mm	type (300,500)		
	Sensor terminal strip (zip fastener)	type (800-2000)		
11	Removable cap (Ø 60 mm) for positioning the sensor in the sensor channel	type (300,500)		
12	Hand-hole flange (flange-mounted electric heating element) Ø 180/120 mm, pitch circle 150 mm, 8 x M10			
12*	**Attention:** type (800,1000) does not have a second flange			
14	Anode sleeve	type (300,500)	G 1″	(IT)
		type (800-2000)	G 1¼″	(IT)
14*	Anode sleeve Screw connection uninsulated	type (1500,2000)	G 1¼″	(IT)
16	Transport strap	type (800-2000)		

CombiVal E type	D	d	H	h	a	k	e	g	m	n	p	r	s	t	u	v	V**	Tilting dimension
(300)	650	500	1850	-	235	-	945	1160	1584	325	-	-	-	1505	1360	745	785	1961
(500)	750	597	1960	-	238	-	996	1225	1674	275	-	-	-	1500	1360	745	785	2082
(800)	950	750	2030	1938	101	347	-	1150	1893	352	-	-	1336	1505	1400	975	1020	1960
(1000)	1050	850	2060	1968	100	355	-	1158	1910	360	-	-	1331	1500	1400	1075	1120	2000
(1500)	1240	1000	2240	2133	105	375	-	1357	2049	390	890	1167	1521	1657	1450	1265	1310	2370
(2000)	1440	1200	2150	2044	118	406	-	1388	1933	421	921	1118	1248	1498	1350	1465	1510	2350

** when using a flange-mounted electric heating element

CombiVal C (200)
(Dimensions in mm)

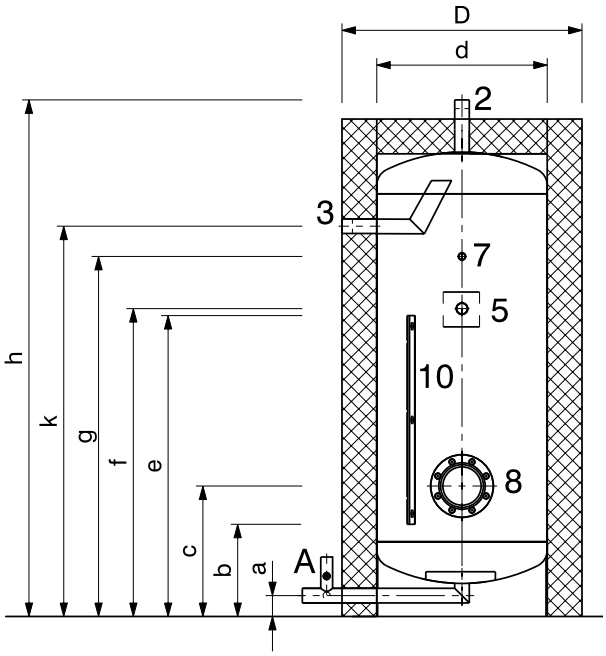

CombiVal C (300-1000)

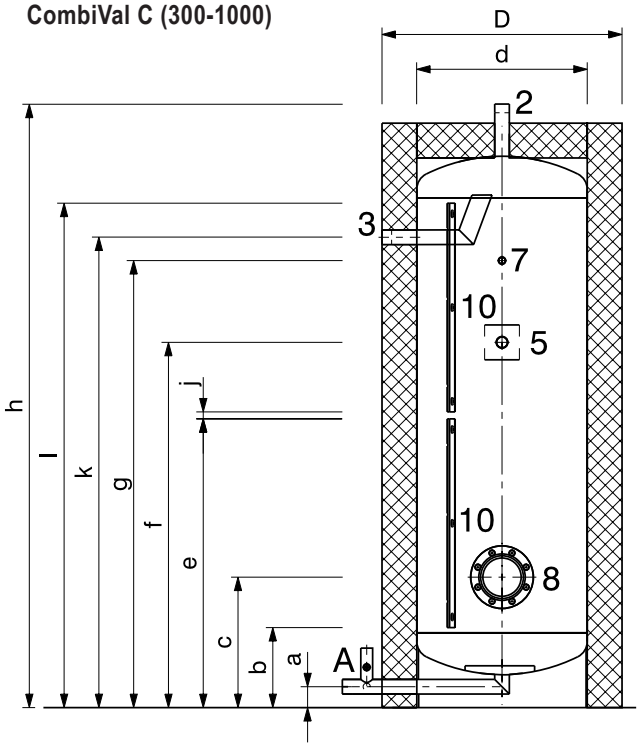

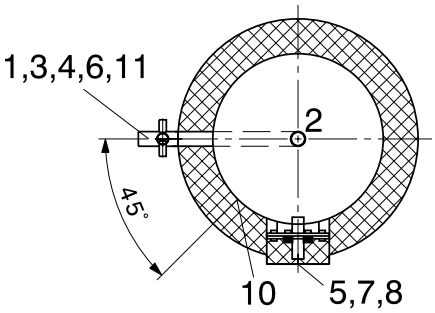

Detail A

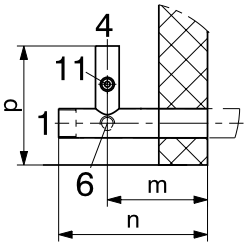

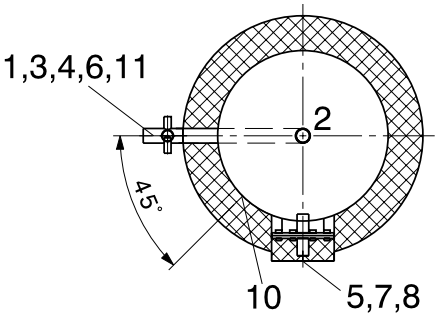

1	Cold water with baffle plate	type (200,300)	Rp 1 ¼″	(IT)
		type (400,500)	Rp 1 ½″	(IT)
		type (750,1000)	Rp 2″	(IT)
2	Hot water	type (200,300)	Rp 1 ¼″	(IT)
		type (400,500)	Rp 1 ½″	(IT)
		type (750,1000)	Rp 2″	(IT)
3	Charging flow - hot	type (200-500)	Rp 1″	(IT)
		type (750,1000)	Rp 1 ¼″	(IT)
4	Charging return - cold	type (200-500)	Rp 1″	(IT)
		type (750,1000)	Rp 1 ¼″	(IT)
5	Circulation with baffle plate	type (200-500)	Rp 1″	(IT)
		type (750,1000)	Rp 1 ¼″	(IT)
6	Drain	type (200-500)	Rp ½″	(IT)
		type (750,1000)	Rp ¾″	(IT)

7 Sleeve (Rp ½″ (IT)) for mountable immersion sleeve and thermometer (L = 100 mm, inner Ø = 8 mm)

8 Hand-hole flange (17.7 Nm)
Ø 180/120 mm, pitch circle 150 mm, 8 x M10 or optional:
- flange-mounted electric heating element or
- impressed current anode set with flange cover, 180 - 1½″ (IT)

10 Sensor terminal bar 600 x 30 mm
1 x type (200), 2 x type (300-1000)

11 Immersion sleeve M16 x 1.5 for sensor/thermostat

Variation because of the production tolerance possible
Dimension +/- 10 mm

CombiVal C type	a	b	c	d	D	e	f	g	h	j	k	l	m	n	p	Tilting dimension
(200)	60	240	375	490	690	840	885	1035	1485	-	1125	-	130	190	174	1515
(300)	60	240	375	490	690	840	1050	1285	1735	20	1355	1460	135	205	174	1765
(400)	70	285	420	590	790	885	1095	1330	1745	20	1365	1505	135	205	184	1780
(500)	80	295	430	640	840	895	1105	1340	1765	20	1375	1515	130	190	194	1805
(750)	80	335	470	740	940	935	1310	1590	2085	60	1665	1595	135	205	194	2130
(1000)	80	365	500	890	1090	965	1215	1495	1890	20	1384	1585	135	205	203	1950

CombiVal C (1500,2000)
(Dimensions in mm)

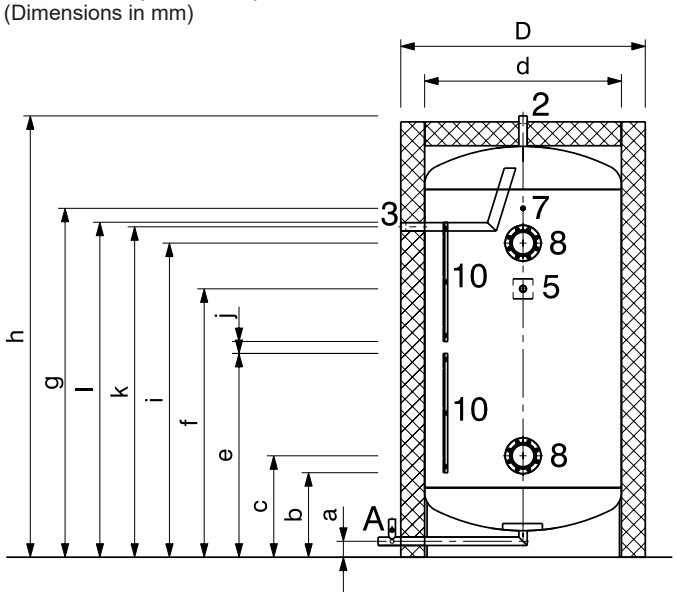

CombiVal C (2500)

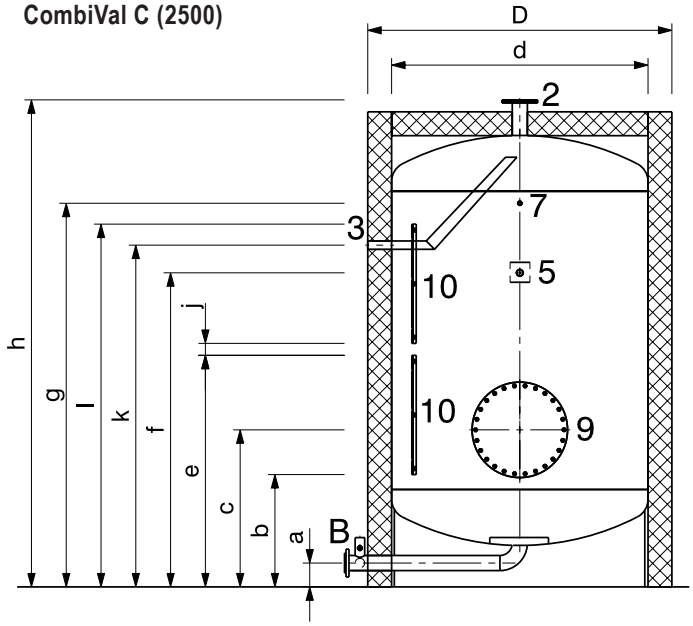

Detail A

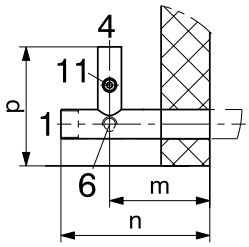

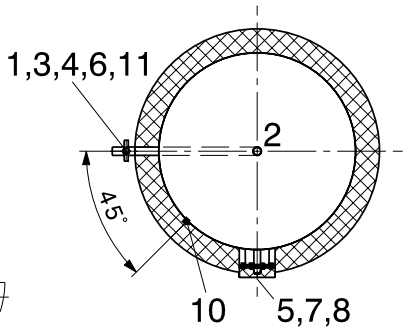

Detail B

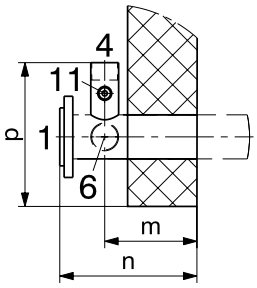

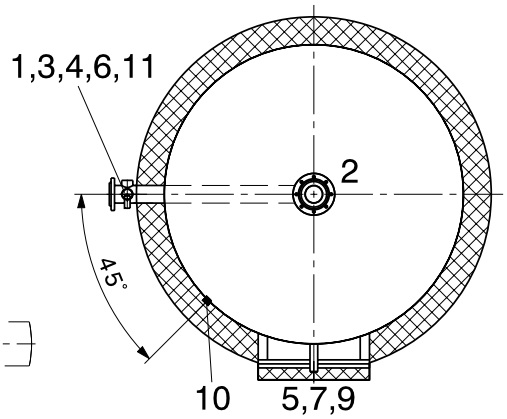

1	Cold water with baffle plate	type (1500,2000)	Rp 2″ (IT)
		type (2500)	DN 65/PN 10
2	Hot water	type (1500,2000)	Rp 2″ (IT)
		type (2500)	DN 65/PN 10
3	Charging flow - hot	type (1500-2000)	Rp 1 ½″ (IT)
4	Charging return - cold	type (1500-2000)	Rp 1 ½″ (IT)
5	Circulation with baffle plate	type (1500-2000)	Rp 1 ½″ (IT)
6	Drain	type (1500-2000)	Rp ¾″ (IT)

7 Sleeve (Rp ½″ (IT)) for mountable immersion sleeve and thermometer (L = 100 mm, inner Ø = 8 mm)

8 Hand-hole flange (17.7 Nm)
Ø 180/120 mm, pitch circle 150 mm, 8 x M10 or optional:
- flange-mounted electric heating element or
- impressed current anode set with flange cover, 180 - 1½″ (IT)

9 Manhole flange (40 Nm)
Ø 400/480 mm, pitch circle 445 mm, 26 x M14 or optional
Flange adapter:
- for electric heating element or
- for impressed current anode set with flange cover, 180 - 1½″ (IT)

10 Sensor terminal bar 600 x 30 mm
2 x type (1500-2500)

11 Immersion sleeve M16 x 1.5 for sensor/thermostat

Variation because of the production tolerance possible
Dimension +/- 10 mm

CombiVal C type	a	b	c	d	D	e	f	g	h	i	j	k	m	n	p	Tilting dimension
(1500)	80	375	510	990	1230	975	1350	1755	2220	1580	60	1674	165	235	203	2300
(2000)	80	405	530	1090	1330	1005	1580	2035	2525	1860	165	1909	165	235	203	2610
(2500)	120	515	790	1290	1530	1115	1580	1930	2450	-	60	1719	165	250	243	2570

Water heating

TransTherm® aqua L
- Circulation via storage tank
- Storage tank charging system

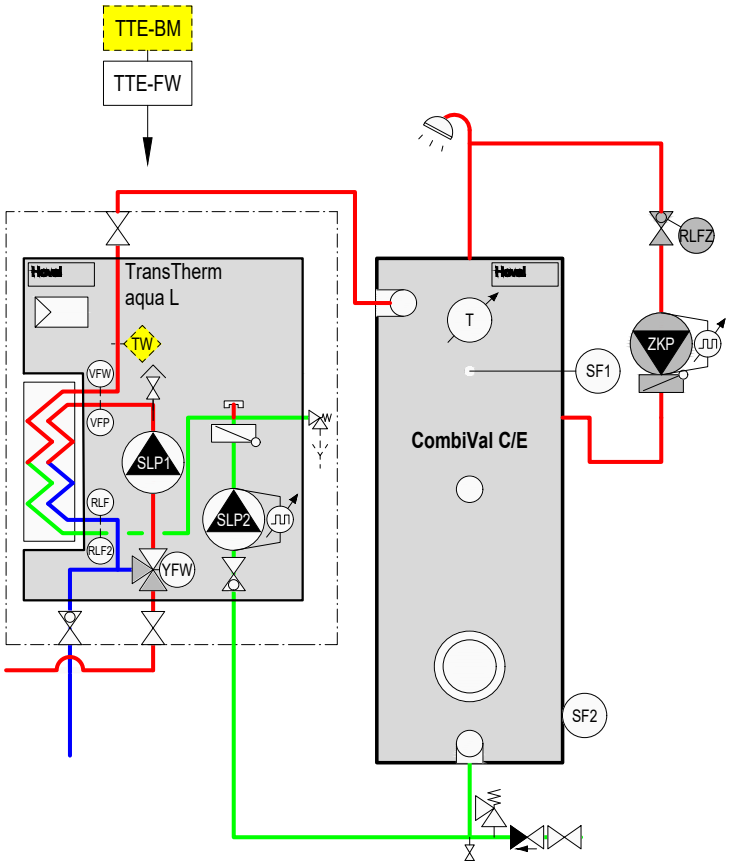

TTE-FW	Basic module district heating/fresh water
TW	Flow temperature monitor (if required)
VFP	Primary flow sensor
VFW	Flow sensor hot water
RLF	Primary return sensor
RLF2	Return sensor cold water
SF1	Calorifier sensor 1
SF2	Calorifier sensor 2
RLFZ	Circulation sensor
SLP1	Calorifier charging pump primary
SLP2	Calorifier charging pump secondary
YFW	Three-way valve with actuator
ZKP	Recirculation pump

Option

BM	TopTronic® E control module

Notice
A safety valve (6 bar) must be installed in the cold water line. The loading module is already protected with a safety valve (10 bar).

Calorifier continuous flow system

Consisting of:
- fresh water module TransTherm® aqua F
- buffer storage tank (option)

Fresh water module TransTherm® aqua F

- Fully installed station with plate heat exchanger for the provision of domestic hot water using the continuous flow principle
- Intended for wall installation
- The primary side (heating side) contains the three-way valve, high-efficiency pump, ventilation, filling/drain valves and balancing valve. These components ensure a constant flow temperature at the plate heat exchanger. Pipes made from steel
- The secondary side (DHW side) contains the safety valve (10 bar), non-return valve and a filling/drain valve. A flow sensor ensures the correct hot water temperature. Pipes made from stainless steel
- Stainless steel plate heat exchanger 1.4404, copper-soldered or copper-free
- EPP insulation, 30 mm, for the heat exchanger
- Flow sensor
- Switch-on and switch-off of the charging pump is regulated via two sensors (included in the scope of delivery) in the storage tank
- Mount tank sensor on the tank on site and connect it to the controller
- T-piece with dummy plug for on-site connection of the circulation group. Connect the pump to the controller on site.
- TopTronic® E control with integrated thermal disinfection of the DHW storage tank (anti-legionella circuit)

Range
Fresh water module

TransTherm® aqua F type	Output kW
(6-10)	50
(6-16)	90
(6-20)	115
(6-30)	175
(6-40)	230
(6-50)	275

Delivery
- The buffer storage tank required is not included in the scope of delivery

On site
- Installation of a circulation unit; the necessary connection is provided
- Electrical connection of the controller

TopTronic® E controller

TopTronic® E basic module district heating/fresh water
- Control unit for controlling district heating systems in non-communicative networks and the corresponding consumers with integrated control functions for
  - primary valve control
  - cascade management
  - 1 heating/cooling circuit with mixer
  - 1 heating/cooling circuit without mixer
  - 1 hot water charging circuit
  - various additional functions

- Various functions for hot water:
  - selection of different basic programs (week programs, economy mode, holiday until, etc.)
  - various operating modes (e.g. accumulator priority or parallel mode)
  - buffer storage circuit on the primary or secondary side
  - adjustable loading criteria (e.g. adjustable loading times, undershooting the minimum nominal value, etc.)
  - adjustable switch-off criteria (e.g. achieving the setpoint valve, achieving the lower sensor setpoint value, etc.)
  - adjustable loading block (if the loading flow temperature is too low, the setpoint temperature is not reached, differential temperature-dependent solar circuit control)
- Definable switching times for recirculation pump control
- Outdoor sensor
- Immersion sensor (calorifier sensor)
- Contact sensor (flow temperature sensor)
- Complete plug set for DH module
- RPM-regulated pumps

No further module expansions or controller modules can be installed in the control panel!

Option

TopTronic® E control module
- Simple, intuitive operating concept
- Display of the most important operating states
- Configurable start screen
- Operating mode selection
- Configurable day and week programs
- Operation of all connected Hoval CAN bus modules
- Commissioning wizard
- Service and maintenance function
- Fault message management
- Analysis function
- Weather display (with HovalConnect option)
- Adaptation of the heating strategy based on the weather forecast (with HovalConnect option)

Notice
The TopTronic® E control module for operating the basic module district heating/fresh water must be ordered separately!

Further information about the TopTronic® E
see “Controls”

Delivery
- All armatures required for operation, such as flow balancing and shut-off valves, backflow preventer, air-bleeding and drain valve are fitted.

Caution
As a result of thermal disinfection of the domestic hot water for legionella protection, increased water temperatures (at least 65-70 °C) occur. Depending on the water quality, this may result in increased calcification at the installed armatures and heat exchangers and also brings the risk of scalding at the tapping points. Corresponding protective measures must be implemented on site.

Fresh water module

TransTherm® aqua F

Fully assembled station with plate heat exchanger for the provision of domestic hot water using the continuous flow principle and built-in Hoval TopTronic® E control.
The required buffer storage tank is not supplied.

TransTherm® aqua F	Output kW	Part No.
(6-10)	50	8006 387
(6-16)	90	8006 388
(6-20)	115	8006 389
(6-30)	175	8006 390
(6-40)	230	8006 391
(6-50)	275	8006 392

Version with copper-free heat exchanger

TransTherm® aqua F

with copper-free heat exchanger

TransTherm® aqua F	Output kW	Part No.
(6-10)	50	8006 521
(6-16)	90	8006 522
(6-20)	115	8006 523
(6-30)	175	8006 524
(6-40)	230	8006 525
(6-50)	275	8006 526

Accessories

TopTronic® E control module black with 4.3″ colour touchscreen
For operation of all controller modules connected to the bus system (basic, solar, buffer modules etc.)
Connection to the Hoval bus system via RJ45 plug connection or via plug terminals (max. 0.75 mm²), flat design with flexible installation option
Installation:
- in control panel of the heat generator
- in the Hoval wall casing
- in the control panel front,

black high-gloss cover, customer-specific configurable start screen,
Display of current weather or weather forecast (only possible in combination with HovalConnect)

Consisting of:
- TopTronic® E control module black
- Clamping device set control module
- RJ45-RAST 5 CAN cable, L = 500

Part No.: 6043 844

Return changeover valve set
Consisting of:
- Temperature sensor
- Changeover valve
- Drive (8 sec.)
- Seals
- Screw connections

Nominal diameter	Output kW	kvs m³/h	Part No.
DN 20	50-90	6.3	7010 832
DN 25	115-175	10	7010 836
DN 32	230-275	16	7011 009
DN 40	350	25	7011 025
DN 50	450	40	7016 331
DN 65	580	63	7016 332
DN 80	700	100	7016 333

Notice
When using a circulation set (also on-site recirculation pump), it is imperative to install a return switching valve set.

Circulation set
for TransTherm® aqua L, F
Piping of parts in contact with domestic water in stainless steel and gunmetal
Consisting of:
- Temperature sensor PT1000
- Recirculation pump Wilo Yonos PARA
- Recirculation pump Wilo Para MAXO
- Regulating valve
- Non-return valve

Connection	Flow rate m³/h	Recirculation pump	Part No.
DN 20 ¾″ Rp	1.9	Z15/7.0 RKC	8005 279
DN 25 1″ Rp	3.4	Z25/180/08/F02	8005 280
DN 32 1¼″ Rp	5.8	Z25/180/08/F02	8005 281

	Part No.
Test valve DN 8 G ¼″ for TransTherm® aqua L, F, FS Test valve suitable for flame treatment for hygienic-microbiologic tests.	2049 861

Sludge separator with magnet MB3/L DN 25...DN 50
Fast and continuous removal of ferromagnetic and non-magnetic dirt and sludge particles.
Sludge separation up to a particle size of 5 µm.
Brass housing
Max. operating pressure: 6 bar
Max. flow temperature: 110 °C

Type	Connection	Flow rate m³/h at 1 m/s flow speed	Part No.
MB3 DN 25	Rp 1″	2.0	2062 165
MBL DN 32	Rp 1¼″	3.6	2062 166
MBL DN 40	Rp 1½″	5.0	2062 167
MBL DN 50	Rp 2″	7.5	2062 168

Additional sludge separators
see “Various system components”

Temperature monitor 0…120 °C for TransTherm® aqua L, F, FS	2048 299
Safety temperature monitor 70…130 °C for TransTherm® aqua L, F, FS	2048 300
Safety temperature limiter 70…130 °C for TransTherm® aqua L, F, FS	2049 619
Immersion sleeve G ½″ stainless steel for thermostat for TransTherm® aqua L, F, FS Installation length = 100 mm Outer Ø: 8 mm, inner Ø: 6.5 mm	2048 285
Immersion sleeve G ½″ stainless steel for 2 thermostats for TransTherm® aqua L, F, FS Installation length = 100 mm Outer Ø: 15 mm, inner Ø: 13.5 mm	2048 288

Services

Commissioning
Commissioning by works service or Hoval trained authorised serviceman/company is condition for warranty.

For commissioning and other services please contact your Hoval sales office.

Part No.

Performance data

TransTherm® aqua F (6-10 to 6-50)

Domestic water secondary	TransTherm® aqua F		Heating water temperature flow 55 °C (6-...) (10)	(16)	(20)	(30)	(40)	(50)	60 °C (6-...) (10)	(16)	(20)	(30)	(40)	(50)
60/5 °C	T return primary	°C	-	-	-	-	-	-	-	-	-	-	-	-
	V̇ primary	**m³/h**	-	-	-	-	-	-	-	-	-	-	-	-
	Q max.	kW	-	-	-	-	-	-	-	-	-	-	-	-
	V̇ secondary	**m³/h**	-	-	-	-	-	-	-	-	-	-	-	-
60/10 °C	T return primary	°C	-	-	-	-	-	-	-	-	-	-	-	-
	V̇ primary	**m³/h**	-	-	-	-	-	-	-	-	-	-	-	-
	Q max.	kW	-	-	-	-	-	-	-	-	-	-	-	-
	V̇ secondary	**m³/h**	-	-	-	-	-	-	-	-	-	-	-	-
60/15 °C	T return primary	°C	-	-	-	-	-	-	-	-	-	-	-	-
	V̇ primary	**m³/h**	-	-	-	-	-	-	-	-	-	-	-	-
	Q max.	kW	-	-	-	-	-	-	-	-	-	-	-	-
	V̇ secondary	**m³/h**	-	-	-	-	-	-	-	-	-	-	-	-
60/20 °C	T return primary	°C	-	-	-	-	-	-	-	-	-	-	-	-
	V̇ primary	**m³/h**	-	-	-	-	-	-	-	-	-	-	-	-
	Q max.	kW	-	-	-	-	-	-	-	-	-	-	-	-
	V̇ secondary	**m³/h**	-	-	-	-	-	-	-	-	-	-	-	-
55/5 °C	T return primary	°C	-	-	-	-	-	-	30	30	30	30	30	30
	V̇ primary	**m³/h**	-	-	-	-	-	-	**1.25**	**2.04**	**2.51**	**3.71**	**4.76**	**5.66**
	Q max.	kW	-	-	-	-	-	-	43	70	86	127	163	194
	V̇ secondary	**m³/h**	-	-	-	-	-	-	**0.74**	**1.2**	**1.48**	**2.18**	**2.8**	**3.33**
55/10 °C	T return primary	°C	-	-	-	-	-	-	30	30	30	30	30	30
	V̇ primary	**m³/h**	-	-	-	-	-	-	**1.11**	**2.04**	**2.51**	**3.71**	**4.76**	**5.63**
	Q max.	kW	-	-	-	-	-	-	38	70	86	127	163	193
	V̇ secondary	**m³/h**	-	-	-	-	-	-	**0.73**	**1.34**	**1.64**	**2.43**	**3.12**	**3.69**
55/15 °C	T return primary	°C	-	-	-	-	-	-	30	30	30	30	30	30
	V̇ primary	**m³/h**	-	-	-	-	-	-	**0.76**	**1.46**	**1.95**	**3.06**	**4.23**	**5.4**
	Q max.	kW	-	-	-	-	-	-	26	50	67	105	145	185
	V̇ secondary	**m³/h**	-	-	-	-	-	-	**0.56**	**1.08**	**1.44**	**2.26**	**3.12**	**3.98**
55/20 °C	T return primary	°C	-	-	-	-	-	-	30	30	30	30	30	30
	V̇ primary	**m³/h**	-	-	-	-	-	-	**0.47**	**0.9**	**1.17**	**1.9**	**2.63**	**3.36**
	Q max.	kW	-	-	-	-	-	-	16	31	40	65	90	115
	V̇ secondary	**m³/h**	-	-	-	-	-	-	**0.39**	**0.76**	**0.99**	**1.6**	**2.22**	**2.83**
50/5 °C	T return primary	°C	30	30	30	30	30	30	30	30	30	30	30	30
	V̇ primary	**m³/h**	**1.29**	**2.03**	**2.51**	**3.67**	**4.72**	**5.66**	**1.28**	**2.04**	**2.51**	**3.71**	**4.76**	**5.63**
	Q max.	kW	37	58	72	105	135	162	44	70	86	127	163	193
	V̇ secondary	**m³/h**	**0.71**	**1.11**	**1.37**	**2**	**2.58**	**3.09**	**0.84**	**1.34**	**1.64**	**2.43**	**3.12**	**3.69**
50/10 °C	T return primary	°C	30	30	30	30	30	30	30	30	30	30	30	30
	V̇ primary	**m³/h**	**1.29**	**2.03**	**2.51**	**3.67**	**4.72**	**5.66**	**1.28**	**2.04**	**2.51**	**3.73**	**4.81**	**5.69**
	Q max.	kW	38	58	72	105	135	162	44	70	86	128	165	195
	V̇ secondary	**m³/h**	**0.82**	**1.25**	**1.77**	**2.26**	**2.9**	**3.48**	**0.95**	**1.51**	**1.85**	**2.75**	**3.55**	**4.19**
50/15 °C	T return primary	°C	30	30	30	30	30	30	30	30	30	30	30	30
	V̇ primary	**m³/h**	**1.29**	**2.03**	**2.51**	**3.67**	**4.72**	**5.66**	**1.11**	**1.95**	**2.48**	**3.76**	**4.76**	**5.69**
	Q max.	kW	37	58	72	105	135	162	38	67	85	129	163	195
	V̇ secondary	**m³/h**	**0.91**	**1.43**	**1.77**	**2.58**	**3.32**	**3.99**	**0.94**	**1.65**	**2.09**	**3.18**	**4.01**	**4.8**
50/20 °C	T return primary	°C	30	30	30	30	30	30	30	30	30	30	30	30
	V̇ primary	**m³/h**	**1.15**	**2.03**	**2.55**	**3.7**	**4.75**	**5.69**	**0.96**	**1.69**	**2.13**	**3.24**	**3.63**	**5.16**
	Q max.	kW	33	58	73	106	136	163	33	58	73	111	145	177
	V̇ secondary	**m³/h**	**0.95**	**1.67**	**2.1**	**3.05**	**3.91**	**4.69**	**0.95**	**1.67**	**2.1**	**3.19**	**4.17**	**5.09**
45/5 °C	T return primary	°C	19	18	18	18	18	17	17	16	16	16	16	15
	V̇ primary	**m³/h**	**0.86**	**1.91**	**2.9**	**2.9**	**3.8**	**4.61**	**0.86**	**1.92**	**2.91**	**2.91**	**3.82**	**4.63**
	Q max.	kW	35	80	123	123	162	199	42	95	145	145	192	235
	V̇ secondary	**m³/h**	**0.76**	**1.73**	**2.65**	**2.65**	**3.50**	**4.27**	**0.90**	**2.05**	**3.13**	**3.13**	**4.14**	**5.05**
45/10 °C	T return primary	°C	21	21	20	20	20	20	20	19	19	19	18	18
	V̇ primary	**m³/h**	**0.86**	**1.91**	**2.89**	**2.89**	**3.81**	**4.62**	**0.86**	**1.92**	**2.84**	**2.84**	**3.63**	**4.32**
	Q max.	kW	33	74	114	114	151	185	39	89	133	133	172	207
	V̇ secondary	**m³/h**	**0.81**	**1.84**	**2.81**	**2.81**	**3.74**	**4.56**	**0.97**	**2.20**	**3.29**	**3.29**	**4.25**	**5.09**
45/15 °C	T return primary	°C	24	23	23	23	23	23	23	22	21	21	21	21
	V̇ primary	**m³/h**	**0.86**	**1.91**	**2.91**	**2.91**	**3.81**	**4.62**	**0.87**	**1.8**	**2.61**	**2.61**	**3.33**	**3.98**
	Q max.	kW	30	69	106	106	139	170	37	78	115	115	148	178
	V̇ secondary	**m³/h**	**0.88**	**1.99**	**3.05**	**3.05**	**4.02**	**4.90**	**1.07**	**2.26**	**3.31**	**3.31**	**4.26**	**5.12**
45/20 °C	T return primary	°C	27	26	26	26	26	26	25	26	24	24	24	24
	V̇ primary	**m³/h**	**0.86**	**1.92**	**2.91**	**2.91**	**3.71**	**4.41**	**0.85**	**1.63**	**2.36**	**2.36**	**3.02**	**3.61**
	Q max.	kW	27	63	96	96	124	148	33	65	96	96	123	148
	V̇ secondary	**m³/h**	**0.96**	**2.18**	**3.33**	**3.33**	**4.28**	**5.13**	**1.16**	**2.27**	**3.32**	**3.32**	**4.28**	**5.14**

T return primary	°C	Temperature primary return
V̇ primary	**m³/h**	Flow rate primary
Q max.	kW	Output
V̇ secondary	**m³/h**	Flow rate secondary

The specified technical data relate to the full load of the module in each case.

Performance data

TransTherm® aqua F (6-10 to 6-50)

Domestic water secondary	TransTherm® aqua F		Heating water temperature flow 65 °C (6-...) (10)	(16)	(20)	(30)	(40)	(50)	70 °C (6-...) (10)	(16)	(20)	(30)	(40)	(50)
60/5 °C	T return primary	°C	30	30	30	30	30	30	30	30	30	30	30	30
	V̇ primary	**m³/h**	**1.08**	**1.88**	**2.5**	**3.73**	**4.84**	**5.77**	**1.32**	**2.09**	**2.59**	**3.76**	**4.82**	**5.72**
	Q max.	kW	43	75	100	149	193	230	60	95	118	171	219	260
	V̇ secondary	**m³/h**	**0.67**	**1.17**	**1.55**	**2.33**	**3.01**	**3.59**	**0.94**	**1.48**	**1.84**	**2.67**	**3.42**	**4.06**
60/10 °C	T return primary	°C	30	30	30	30	30	30	30	30	30	30	30	30
	V̇ primary	**m³/h**	**0.8**	**1.5**	**2.01**	**3.16**	**4.34**	**5.39**	**1.08**	**1.94**	**2.48**	**3.77**	**4.95**	**5.92**
	Q max.	kW	32	60	80	126	173	215	50	90	115	175	230	275
	V̇ secondary	**m³/h**	**0.55**	**1.03**	**1.38**	**2.17**	**2.98**	**3.7**	**0.86**	**1.54**	**1.98**	**3.01**	**3.95**	**4.73**
60/15 °C	T return primary	°C	30	30	30	30	30	30	30	30	30	30	30	30
	V̇ primary	**m³/h**	**0.55**	**1.05**	**1.38**	**2.13**	**3.08**	**3.96**	**0.97**	**1.8**	**2.37**	**3.73**	**4.84**	**5.72**
	Q max.	kW	22	42	55	85	123	158	44	82	108	170	220	260
	V̇ secondary	**m³/h**	**0.42**	**0.8**	**1.05**	**1.63**	**2.35**	**3.02**	**0.84**	**1.57**	**2.08**	**3.24**	**4.21**	**4.98**
60/20 °C	T return primary	°C	30	30	30	30	30	30	30	30	30	30	30	30
	V̇ primary	**m³/h**	**0.3**	**0.6**	**0.8**	**1.28**	**1.75**	**2.33**	**0.62**	**1.14**	**2.05**	**2.4**	**3.43**	**4.22**
	Q max.	kW	12	24	32	51	70	93	28	52	68	109	156	192
	V̇ secondary	**m³/h**	**0.26**	**0.52**	**0.69**	**1.1**	**1.51**	**2**	**0.6**	**1.12**	**1.47**	**2.36**	**3.36**	**4.14**
55/5 °C	T return primary	°C	30	30	30	30	30	30	30	30	30	30	30	30
	V̇ primary	**m³/h**	**0.8**	**1.5**	**2.01**	**3.16**	**4.34**	**5.39**	**1.08**	**2.09**	**2.53**	**3.74**	**4.84**	**5.76**
	Q max.	kW	32	60	80	126	173	215	50	95	115	170	220	262
	V̇ secondary	**m³/h**	**0.55**	**1.03**	**1.38**	**2.17**	**2.98**	**3.7**	**0.86**	**1.63**	**1.97**	**2.92**	**3.78**	**4.5**
55/10 °C	T return primary	°C	30	30	30	30	30	30	30	30	30	30	30	30
	V̇ primary	**m³/h**	**1.3**	**2.06**	**2.53**	**3.71**	**4.81**	**5.64**	**1.08**	**1.87**	**2.42**	**3.74**	**4.84**	**5.72**
	Q max.	kW	52	82	101	148	192	225	49	85	110	170	220	260
	V̇ secondary	**m³/h**	**0.99**	**1.57**	**1.93**	**2.83**	**3.67**	**4.3**	**0.94**	**1.62**	**2.1**	**3.24**	**4.21**	**4.98**
55/15 °C	T return primary	°C	30	30	30	30	30	30	30	30	30	30	30	30
	V̇ primary	**m³/h**	**0.97**	**1.65**	**2.11**	**3.71**	**4.81**	**5.64**	**1.1**	**1.88**	**2.41**	**3.74**	**4.22**	**5.1**
	Q max.	kW	44	75	96	148	192	225	44	75	96	148	192	232
	V̇ secondary	**m³/h**	**0.95**	**1.61**	**2.07**	**3.19**	**4.13**	**4.84**	**0.94**	**1.62**	**2.1**	**3.19**	**4.21**	**5**
55/20 °C	T return primary	°C	30	30	30	30	30	30	30	30	30	30	30	30
	V̇ primary	**m³/h**	**0.95**	**1.68**	**2.13**	**3.23**	**4.24**	**5.14**	**0.84**	**1.47**	**1.87**	**2.84**	**3.72**	**4.51**
	Q max.	kW	38	67	85	129	169	205	38	67	85	129	169	205
	V̇ secondary	**m³/h**	**0.94**	**1.65**	**2.09**	**3.18**	**4.16**	**5.05**	**0.94**	**1.65**	**2.09**	**3.18**	**4.16**	**5.05**
50/5 °C	T return primary	°C	30	30	30	30	30	30	30	30	30	30	30	30
	V̇ primary	**m³/h**	**1.25**	**2.06**	**2.53**	**3.71**	**4.81**	**5.64**	**1.08**	**1.87**	**2.42**	**3.56**	**4.84**	**5.72**
	Q max.	kW	50	82	101	148	192	225	49	85	110	162	220	260
	V̇ secondary	**m³/h**	**0.95**	**1.57**	**1.93**	**2.83**	**3.67**	**4.3**	**0.94**	**1.62**	**2.1**	**3.09**	**4.21**	**4.98**
50/10 °C	T return primary	°C	30	30	30	30	30	30	30	30	30	30	30	30
	V̇ primary	**m³/h**	**1.1**	**1.88**	**2.41**	**3.71**	**4.81**	**5.64**	**0.97**	**1.65**	**2.11**	**3.25**	**4.22**	**5.1**
	Q max.	kW	44	75	96	148	192	225	44	75	96	148	192	232
	V̇ secondary	**m³/h**	**0.95**	**1.61**	**2.07**	**3.19**	**4.13**	**4.84**	**0.95**	**1.61**	**2.07**	**3.19**	**4.13**	**5**
50/15 °C	T return primary	°C	30	30	30	30	30	30	30	30	30	30	30	30
	V̇ primary	**m³/h**	**0.95**	**1.68**	**2.13**	**3.23**	**4.24**	**5.14**	**0.84**	**1.47**	**1.87**	**2.84**	**3.72**	**4.51**
	Q max.	kW	38	67	85	129	169	205	38	67	85	129	169	205
	V̇ secondary	**m³/h**	**0.94**	**1.65**	**2.09**	**3.18**	**4.16**	**5.05**	**0.94**	**1.65**	**2.09**	**3.18**	**4.16**	**5.05**
50/20 °C	T return primary	°C	30	30	30	30	30	30	30	30	30	30	30	30
	V̇ primary	**m³/h**	**0.83**	**1.45**	**1.81**	**2.44**	**3.63**	**4.44**	**0.73**	**1.28**	**1.61**	**2.44**	**3.19**	**3.89**
	Q max.	kW	33	58	73	111	145	177	33	58	73	111	145	177
	V̇ secondary	**m³/h**	**0.95**	**1.67**	**2.1**	**3.19**	**4.17**	**5.09**	**0.95**	**1.67**	**2.1**	**3.19**	**4.17**	**5.09**
45/5 °C	T return primary	°C	16	15	14	14	14	13	15	13	13	13	12	12
	V̇ primary	**m³/h**	**0.87**	**1.83**	**2.64**	**2.64**	**3.38**	**4.03**	**0.84**	**1.62**	**2.35**	**2.35**	**3.01**	**3.59**
	Q max.	kW	48	104	152	152	196	236	52	104	152	152	196	236
	V̇ secondary	**m³/h**	**1.04**	**2.24**	**3.27**	**3.27**	**4.23**	**5.07**	**1.13**	**2.24**	**3.28**	**3.28**	**4.23**	**5.07**
45/10 °C	T return primary	°C	19	17	17	17	17	16	17	16	16	16	15	15
	V̇ primary	**m³/h**	**0.87**	**1.69**	**2.45**	**2.45**	**3.13**	**3.73**	**0.77**	**1.49**	**2.17**	**2.17**	**2.78**	**3.32**
	Q max.	kW	45	91	134	134	172	206	46	91	133	133	172	206
	V̇ secondary	**m³/h**	**1.13**	**2.25**	**3.30**	**3.30**	**4.24**	**5.09**	**1.13**	**2.24**	**3.29**	**3.29**	**4.24**	**5.09**
45/15 °C	T return primary	°C	21	20	20	20	20	19	20	19	19	19	19	18
	V̇ primary	**m³/h**	**0.8**	**1.55**	**2.24**	**2.24**	**2.87**	**3.43**	**0.71**	**1.36**	**1.98**	**1.98**	**2.54**	**3.03**
	Q max.	kW	39	78	115	115	148	178	40	78	114	114	148	177
	V̇ secondary	**m³/h**	**1.14**	**2.27**	**3.31**	**3.31**	**4.26**	**5.11**	**1.16**	**2.26**	**3.30**	**3.30**	**4.26**	**5.10**
45/20 °C	T return primary	°C	24	23	23	23	23	23	23	23	22	22	22	22
	V̇ primary	**m³/h**	**0.72**	**1.4**	**2.02**	**2.02**	**2.59**	**3.1**	**0.63**	**1.22**	**1.78**	**1.78**	**2.29**	**2.73**
	Q max.	kW	33	66	96	96	123	148	33	65	96	96	124	148
	V̇ secondary	**m³/h**	**1.16**	**2.29**	**3.32**	**3.32**	**4.28**	**5.13**	**1.15**	**2.27**	**3.32**	**3.32**	**4.29**	**5.13**

T return primary	°C	Temperature primary return
V̇ primary	**m³/h**	Flow rate primary
Q max.	kW	Output
V̇ secondary	**m³/h**	Flow rate secondary

The specified technical data relate to the full load of the module in each case.

Performance data

TransTherm® aqua F

Residential units standard apartment according to DIN 4708	Peak heat demand standard apartment according to DIN 4708 with preparation 10 min	Sum flow rate domestic hot water calcu-lation flow rate according to DIN 4708	Simultaneity factor according to DIN 4708	Peak flow rate (DHW)	Peak flow rate (DHW)	Peak flow rate (DHW)	Peak output (DHW)	Peak flow rate TransTherm® aqua F (DHW)	Peak flow rate TransTherm® aqua F (DHW)	Peak flow rate TransTherm® aqua F (DHW)	DHW calorifier output TransTherm® aqua F	TransTherm® aqua F	Required hot water volume at 70/30 °C (40 K)	Required hot water buffer storage tank volume at 70/30 °C (40 K)	Hot water buffer storage tank 1 EnerVal	Required recharging capacity	Required recharging capacity	Required recharging capacity
N	Prepa-ration	∑ VR at DHW 60 °C	g	V̇s at DHW 60 °C	V̇s at DHW 60 °C	V̇s at DHW 60 °C		V̇s at DHW 60 °C	V̇s at DHW 60 °C	V̇s at DHW 60 °C	Q at HT 70/30 °C DHW 10/60 °C	Type			Type	Time: 20 min 70/30 °C (40 K)	Time: 30 min 70/30 °C (40 K)	Time: 60 min 70/30 °C (40 K)
	[Wh]	[l/s]		[l/s]	[l/min]	[m³/h]	[kW]	[l/s]	[l/min]	[m³/h]	[kW]		[m³]	[m³]		[kW]	[kW]	[kW]
1	5820	0.17	1.00	0.17	10.01	0.60	35	0.24	14.3	0.86	50	(6-10)	0.13	0.16	(200)	23	15	8
2	11640	0.33	0.680	0.23	13.61	0.82	47	0.24	14.3	0.86	50	(6-10)	0.17	0.22	(200)	31	21	10
3	17460	0.50	0.544	0.27	16.33	0.98	57	0.43	25.8	1.55	90	(6-16)	0.20	0.27	(300)	37	25	12
4	23280	0.67	0.466	0.31	18.66	1.12	65	0.43	25.8	1.55	90	(6-16)	0.23	0.30	(300)	42	28	14
5	29100	0.83	0.415	0.35	20.77	1.25	72	0.43	25.8	1.55	90	(6-16)	0.26	0.34	(500)	47	31	16
6	34920	1.00	0.377	0.38	22.64	1.36	79	0.43	25.8	1.55	90	(6-16)	0.28	0.37	(500)	51	34	17
7	40740	1.17	0.349	0.41	24.45	1.47	85	0.43	25.8	1.55	90	(6-16)	0.31	0.40	(500)	55	37	18
8	46560	1.33	0.349	0.47	27.94	1.68	97	0.55	33.0	1.98	115	(6-20)	0.35	0.45	(500)	63	42	21
9	52380	1.50	0.308	0.46	27.74	1.66	97	0.55	33.0	1.98	115	(6-20)	0.35	0.45	(500)	63	42	21
10	58200	1.67	0.292	0.49	29.23	1.75	102	0.55	33.0	1.98	115	(6-20)	0.37	0.47	(500)	66	44	22
11	64020	1.83	0.279	0.51	30.72	1.84	107	0.55	33.0	1.98	115	(6-20)	0.38	0.50	(500)	70	46	23
12	69840	2.00	0.268	0.54	32.19	1.93	112	0.55	33.0	1.98	115	(6-20)	0.40	0.52	(500)	73	49	24
13	75660	2.17	0.258	0.56	33.57	2.01	117	0.55	33.0	1.98	115	(6-20)	0.42	0.55	(500)	76	51	25
14	81480	2.34	0.249	0.58	34.89	2.09	122	0.84	50.2	3.01	175	(6-30)	0.44	0.57	(500)	79	53	26
15	87300	2.50	0.242	0.61	36.33	2.18	127	0.84	50.2	3.01	175	(6-30)	0.45	0.59	(800)	82	55	27
16	93120	2.67	0.235	0.63	37.63	2.26	131	0.84	50.2	3.01	175	(6-30)	0.47	0.61	(800)	85	57	28
17	98940	2.84	0.228	0.65	38.79	2.33	135	0.84	50.2	3.01	175	(6-30)	0.49	0.63	(800)	88	59	29
18	104760	3.00	0.223	0.67	40.17	2.41	140	0.84	50.2	3.01	175	(6-30)	0.50	0.65	(800)	91	61	30
19	110580	3.17	0.217	0.69	41.27	2.48	144	0.84	50.2	3.01	175	(6-30)	0.52	0.67	(800)	94	62	31
20	116400	3.34	0.212	0.71	42.44	2.55	148	0.84	50.2	3.01	175	(6-30)	0.53	0.69	(800)	96	64	32
21	122220	3.50	0.208	0.73	43.72	2.62	153	0.84	50.2	3.01	175	(6-30)	0.55	0.71	(800)	99	66	33
22	128040	3.67	0.204	0.75	44.92	2.70	157	0.84	50.2	3.01	175	(6-30)	0.56	0.73	(800)	102	68	34
23	133860	3.84	0.200	0.77	46.04	2.76	161	0.84	50.2	3.01	175	(6-30)	0.58	0.75	(800)	104	70	35
24	139680	4.00	0.196	0.78	47.08	2.82	164	0.84	50.2	3.01	175	(6-30)	0.59	0.77	(800)	107	71	36
25	145500	4.17	0.193	0.80	48.29	2.90	168	0.84	50.2	3.01	175	(6-30)	0.60	0.78	(800)	110	73	37
26	151320	4.34	0.190	0.82	49.44	2.97	173	0.84	50.2	3.01	175	(6-30)	0.62	0.80	(800)	112	75	37
27	157140	4.50	0.187	0.84	50.53	3.03	176	0.84	50.2	3.01	175	(6-30)	0.63	0.82	(800)	115	76	38
28	162960	4.67	0.184	0.86	51.56	3.09	180	0.84	50.2	3.01	175	(6-30)	0.64	0.84	(800)	117	78	39
29	168780	4.84	0.181	0.88	52.54	3.15	183	1.10	65.8	3.95	230	(6-40)	0.66	0.85	(800)	119	79	40
30	174600	5.00	0.179	0.90	53.75	3.22	188	1.10	65.8	3.95	230	(6-40)	0.67	0.87	(1000)	122	81	41
31	180420	5.17	0.176	0.91	54.61	3.28	191	1.10	65.8	3.95	230	(6-40)	0.68	0.89	(1000)	124	83	41
32	186240	5.34	0.174	0.93	55.73	3.34	194	1.10	65.8	3.95	230	(6-40)	0.70	0.91	(1000)	126	84	42
33	192060	5.50	0.172	0.95	56.81	3.41	198	1.10	65.8	3.95	230	(6-40)	0.71	0.92	(1000)	129	86	43
34	197880	5.67	0.170	0.96	57.85	3.47	202	1.10	65.8	3.95	230	(6-40)	0.72	0.94	(1000)	131	87	44
35	203700	5.84	0.168	0.98	58.85	3.53	205	1.10	65.8	3.95	230	(6-40)	0.74	0.96	(1000)	133	89	44
36	209520	6.01	0.166	1.00	59.81	3.59	209	1.10	65.8	3.95	230	(6-40)	0.75	0.97	(1000)	136	90	45
37	215340	6.17	0.164	1.01	60.73	3.64	212	1.10	65.8	3.95	230	(6-40)	0.76	0.99	(1000)	138	92	46
38	221160	6.34	0.163	1.03	61.99	3.72	216	1.10	65.8	3.95	230	(6-40)	0.78	1.01	(1000)	141	94	47
39	226980	6.51	0.161	1.05	62.84	3.77	219	1.10	65.8	3.95	230	(6-40)	0.79	1.02	(1000)	143	95	48
40	232800	6.67	0.159	1.06	63.65	3.82	222	1.10	65.8	3.95	230	(6-40)	0.80	1.03	(1000)	144	96	48
41	238620	6.84	0.158	1.08	64.84	3.89	226	1.10	65.8	3.95	230	(6-40)	0.81	1.05	(1000)	147	98	49
42	244440	7.01	0.156	1.09	65.58	3.93	229	1.10	65.8	3.95	230	(6-40)	0.82	1.07	(1000)	149	99	50
43	250260	7.17	0.155	1.11	66.71	4.00	233	1.10	65.8	3.95	230	(6-40)	0.83	1.08	(1000)	151	101	50
44	256080	7.34	0.154	1.13	67.82	4.07	237	1.31	78.8	4.73	275	(6-50)	0.85	1.10	(1500)	154	103	51
45	261900	7.51	0.152	1.14	68.46	4.11	239	1.31	78.8	4.73	275	(6-50)	0.86	1.11	(1500)	155	104	52
46	267720	7.67	0.151	1.16	69.52	4.17	243	1.31	78.8	4.73	275	(6-50)	0.87	1.13	(1500)	158	105	53
47	273540	7.84	0.150	1.18	70.56	4.23	246	1.31	78.8	4.73	275	(6-50)	0.88	1.15	(1500)	160	107	53
48	279360	8.01	0.149	1.19	71.58	4.29	250	1.31	78.8	4.73	275	(6-50)	0.89	1.16	(1500)	162	108	54
49	285180	8.17	0.148	1.21	72.58	4.35	253	1.31	78.8	4.73	275	(6-50)	0.91	1.18	(1500)	165	110	55
50	291000	8.34	0.146	1.22	73.06	4.38	255	1.31	78.8	4.73	275	(6-50)	0.91	1.19	(1500)	166	110	55
51	296820	8.51	0.145	1.23	74.01	4.44	258	1.31	78.8	4.73	275	(6-50)	0.93	1.20	(1500)	168	112	56
52	302640	8.67	0.144	1.25	74.94	4.50	261	1.31	78.8	4.73	275	(6-50)	0.94	1.22	(1500)	170	113	57
53	308460	8.84	0.143	1.26	75.86	4.55	265	1.31	78.8	4.73	275	(6-50)	0.95	1.23	(1500)	172	115	57
54	314280	9.01	0.142	1.28	76.75	4.60	268	1.31	78.8	4.73	275	(6-50)	0.96	1.25	(1500)	174	116	58

Residential units standard apartment according to DIN 4708	Peak heat demand standard apartment according to DIN 4708 with preparation 10 min	Sum flow rate domestic hot water calcu-lation flow rate according to DIN 4708	Simultaneity factor according to DIN 4708	Peak flow rate (DHW)	Peak flow rate (DHW)	Peak flow rate (DHW)	Peak output (DHW)	Peak flow rate TransTherm® aqua F (DHW)	Peak flow rate TransTherm® aqua F (DHW)	Peak flow rate TransTherm® aqua F (DHW)	DHW calorifier output TransTherm® aqua F	TransTherm® aqua F	Required hot water volume at 70/30 °C (40 K)	Required hot water buffer storage tank volume at 70/30 °C (40 K)	Hot water buffer storage tank 1 EnerVal	Required recharging capacity	Required recharging capacity	Required recharging capacity
N	Prepa-ration	∑ VR at DHW 60 °C	g	$\dot{V}s$ at DHW 60 °C	$\dot{V}s$ at DHW 60 °C	$\dot{V}s$ at DHW 60 °C		$\dot{V}s$ at DHW 60 °C	$\dot{V}s$ at DHW 60 °C	$\dot{V}s$ at DHW 60 °C	Q at HT 70/30 °C DHW 10/60 °C	Type			Type	Time: 20 min 70/30 °C (40 K)	Time: 30 min 70/30 °C (40 K)	Time: 60 min 70/30 °C (40 K)
	[Wh]	[l/s]		[l/s]	[l/min]	[m³/h]	[kW]	[l/s]	[l/min]	[m³/h]	[kW]		[m³]	[m³]		[kW]	[kW]	[kW]
55	320100	9.17	0.141	1.29	77.62	4.66	271	1.31	78.8	4.73	275	(6-50)	0.97	1.26	(1500)	176	117	59
56	325920	9.34	0.140	1.31	78.47	4.71	274	1.31	78.8	4.73	275	(6-50)	0.98	1.28	(1500)	178	119	59
57	331740	9.51	0.140	1.33	79.87	4.79	279	1.31	78.8	4.73	275	(6-50)	1.00	1.30	(1500)	181	121	60
58	337560	9.67	0.139	1.34	80.69	4.84	282	1.69	101.2	6.07	350	(6-60)	1.01	1.31	(1500)	183	122	61
59	343380	9.84	0.138	1.36	81.49	4.89	284	1.69	101.2	6.07	350	(6-60)	1.02	1.32	(1500)	185	123	62
60	349200	10.01	0.137	1.37	82.27	4.94	287	1.69	101.2	6.07	350	(6-60)	1.03	1.34	(1500)	187	124	62
61	355020	10.18	0.136	1.38	83.03	4.98	290	1.69	101.2	6.07	350	(6-60)	1.04	1.35	(1500)	188	126	63
62	360840	10.34	0.135	1.40	83.77	5.03	292	1.69	101.2	6.07	350	(6-60)	1.05	1.36	(1500)	190	127	63
63	366660	10.51	0.135	1.42	85.12	5.11	297	1.69	101.2	6.07	350	(6-60)	1.06	1.38	(1500)	193	129	64
64	372480	10.68	0.134	1.43	85.83	5.15	299	1.69	101.2	6.07	350	(6-60)	1.07	1.40	(1500)	195	130	65
65	378300	10.84	0.133	1.44	86.52	5.19	302	1.69	101.2	6.07	350	(6-60)	1.08	1.41	(1500)	196	131	65
66	384120	11.01	0.132	1.45	87.19	5.23	304	1.69	101.2	6.07	350	(6-60)	1.09	1.42	(1500)	198	132	66
67	389940	11.18	0.132	1.48	88.52	5.31	309	1.69	101.2	6.07	350	(6-60)	1.11	1.44	(1500)	201	134	67
68	395760	11.34	0.131	1.49	89.16	5.35	311	1.69	101.2	6.07	350	(6-60)	1.11	1.45	(1500)	202	135	67
69	401580	11.51	0.130	1.50	89.78	5.39	313	1.69	101.2	6.07	350	(6-60)	1.12	1.46	(1500)	204	136	68
70	407400	11.68	0.130	1.52	91.08	5.46	318	1.69	101.2	6.07	350	(6-60)	1.14	1.48	(1500)	207	138	69
71	413220	11.84	0.129	1.53	91.67	5.50	320	1.69	101.2	6.07	350	(6-60)	1.15	1.49	(1500)	208	139	69
72	419040	12.01	0.128	1.54	92.24	5.53	322	1.69	101.2	6.07	350	(6-60)	1.15	1.50	(1500)	209	139	70
73	424860	12.18	0.128	1.56	93.52	5.61	326	1.69	101.2	6.07	350	(6-60)	1.17	1.52	(1500)	212	141	71
74	430680	12.34	0.127	1.57	94.06	5.64	328	1.69	101.2	6.07	350	(6-60)	1.18	1.53	(1500)	213	142	71
75	436500	12.51	0.127	1.59	95.33	5.72	333	1.69	101.2	6.07	350	(6-60)	1.19	1.55	(1500)	216	144	72
76	442320	12.68	0.126	1.60	95.84	5.75	334	1.69	101.2	6.07	350	(6-60)	1.20	1.56	(1500)	217	145	72
77	448140	12.84	0.126	1.62	97.10	5.83	339	1.69	101.2	6.07	350	(6-60)	1.21	1.58	(1500)	220	147	73
78	453960	13.01	0.125	1.63	97.58	5.86	340	1.69	101.2	6.07	350	(6-60)	1.22	1.59	(1500)	221	148	74
79	459780	13.18	0.124	1.63	98.04	5.88	342	1.69	101.2	6.07	350	(6-60)	1.23	1.59	(1500)	222	148	74
80	465600	13.34	0.124	1.65	99.29	5.96	346	1.69	101.2	6.07	350	(6-60)	1.24	1.61	(2000)	225	150	75
81	471420	13.51	0.123	1.66	99.72	5.98	348	1.69	101.2	6.07	350	(6-60)	1.25	1.62	(2000)	226	151	75
82	477240	13.68	0.123	1.68	100.95	6.06	352	1.69	101.2	6.07	350	(6-60)	1.26	1.64	(2000)	229	153	76
83	483060	13.85	0.122	1.69	101.35	6.08	354	1.69	101.2	6.07	350	(6-60)	1.27	1.65	(2000)	230	153	77
84	488880	14.01	0.122	1.71	102.57	6.15	358	2.17	130.0	7.80	450	(6-70)	1.28	1.67	(2000)	233	155	78
85	494700	14.18	0.121	1.72	102.94	6.18	359	2.17	130.0	7.80	450	(6-70)	1.29	1.67	(2000)	233	156	78
86	500520	14.35	0.121	1.74	104.15	6.25	363	2.17	130.0	7.80	450	(6-70)	1.30	1.69	(2000)	236	157	79
87	506340	14.51	0.120	1.74	104.49	6.27	365	2.17	130.0	7.80	450	(6-70)	1.31	1.70	(2000)	237	158	79
88	512160	14.68	0.120	1.76	105.69	6.34	369	2.17	130.0	7.80	450	(6-70)	1.32	1.72	(2000)	240	160	80
89	517980	14.85	0.120	1.78	106.89	6.41	373	2.17	130.0	7.80	450	(6-70)	1.34	1.74	(2000)	242	162	81
90	523800	15.01	0.119	1.79	107.19	6.43	374	2.17	130.0	7.80	450	(6-70)	1.34	1.74	(2000)	243	162	81
91	529620	15.18	0.119	1.81	108.38	6.50	378	2.17	130.0	7.80	450	(6-70)	1.36	1.76	(2000)	246	164	82
92	535440	15.35	0.118	1.81	108.65	6.52	379	2.17	130.0	7.80	450	(6-70)	1.36	1.77	(2000)	246	164	82
93	541260	15.51	0.118	1.83	109.83	6.59	383	2.17	130.0	7.80	450	(6-70)	1.37	1.79	(2000)	249	166	83
94	547080	15.68	0.117	1.83	110.07	6.60	384	2.17	130.0	7.80	450	(6-70)	1.38	1.79	(2000)	250	166	83
95	552900	15.85	0.117	1.85	111.25	6.67	388	2.17	130.0	7.80	450	(6-70)	1.39	1.81	(2000)	252	168	84
96	558720	16.01	0.117	1.87	112.42	6.74	392	2.17	130.0	7.80	450	(6-70)	1.41	1.83	(2000)	255	170	85
97	564540	16.18	0.116	1.88	112.62	6.76	393	2.17	130.0	7.80	450	(6-70)	1.41	1.83	(2000)	255	170	85
98	570360	16.35	0.116	1.90	113.78	6.83	397	2.17	130.0	7.80	450	(6-70)	1.42	1.85	(2000)	258	172	86
99	576180	16.51	0.116	1.92	114.94	6.90	401	2.17	130.0	7.80	450	(6-70)	1.44	1.87	(2000)	261	174	87
100	582000	16.68	0.115	1.92	115.10	6.91	402	2.17	130.0	7.80	450	(6-70)	1.44	1.87	(2000)	261	174	87

Pressure drop (ΔP / Q max) - domestic water side (secondary)

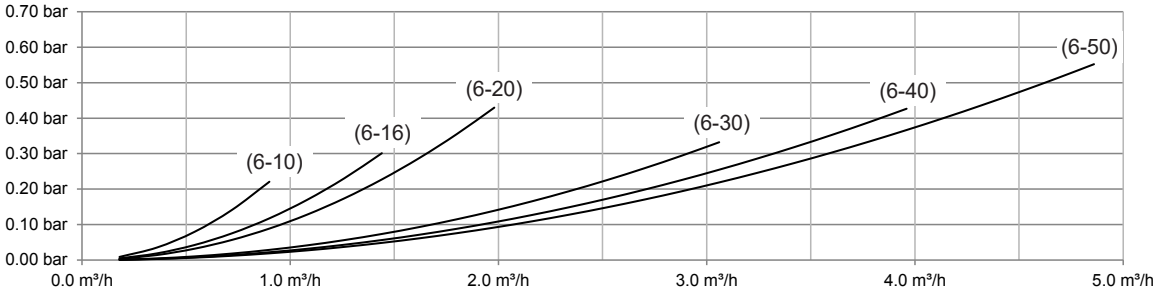

Circulating pumps characteristic curves

for circulation set ¾″

Δp-v (variable)

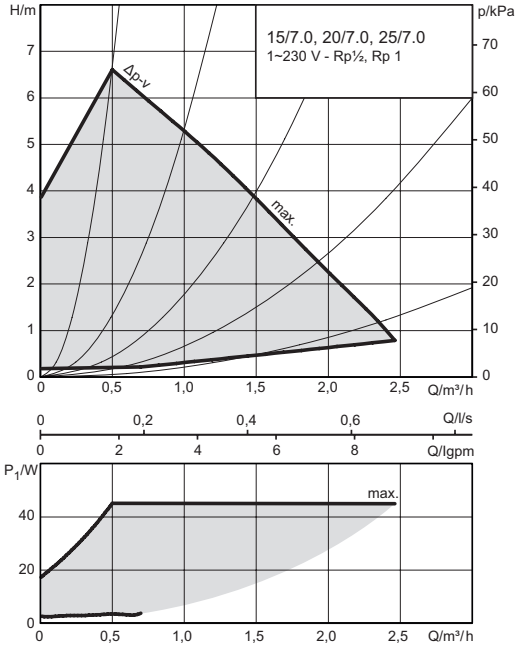

Constant speed

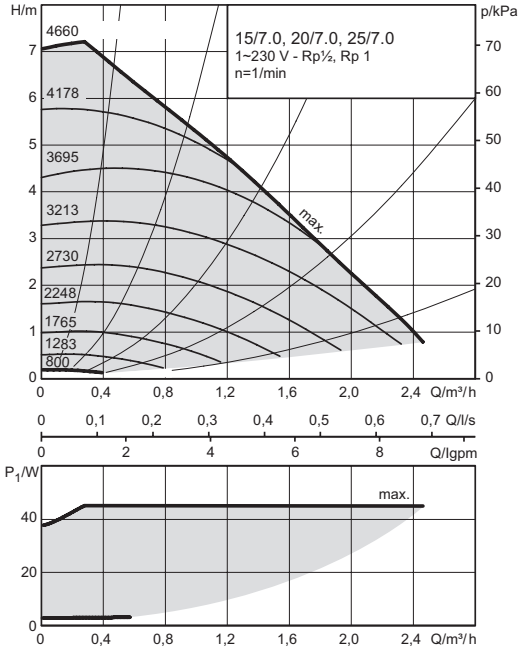

for circulation set 1″ and 1 ¼″

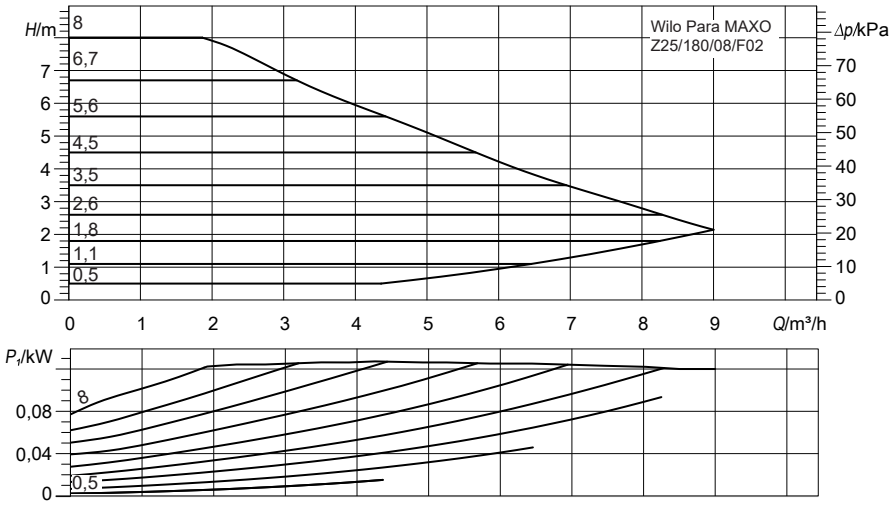

Charging module TransTherm® aqua F (6-10 to 6-20)

(Dimensions in mm)

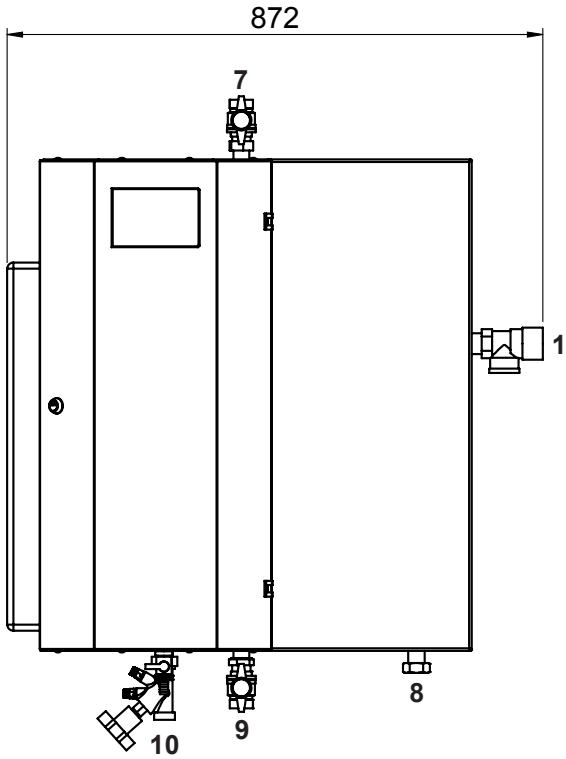

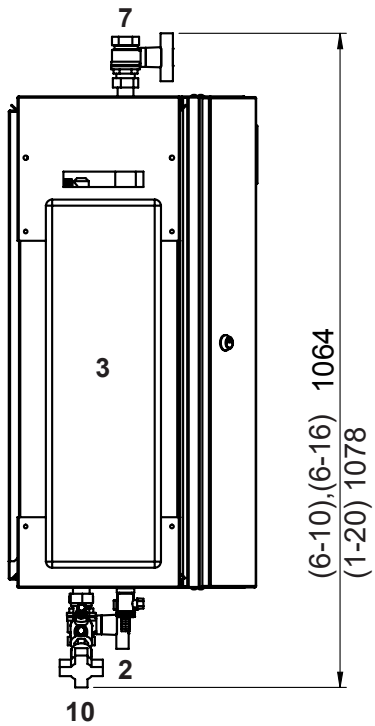

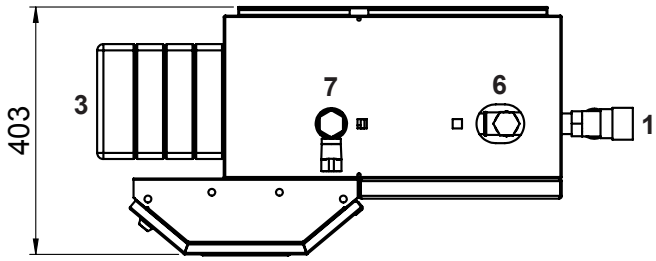

1 Safety valve
Hot water 10 bar
2 Filling/drain valve
3 Heat exchanger

		(6-10) (6-16) (6-20)
6	Circulation	DN 25, Rp 1″ (20, Rp ¾″) (IT)
7	Hot water	DN 25, Rp 1″ (IT)
8	Cold water	DN 25, Gp 1″ (IT)
9	Flow heating water	DN 25, Rp 1″ (IT)
10	Return heating water	DN 20, Gp 1″ (IT)

Gp = straight internal thread

TransTherm® aqua F	Weight in kg
(6-10)	52
(6-16)	54
(6-20)	56

Charging module TransTherm® aqua F (6-10 to 6-20)

(Dimensions in mm)

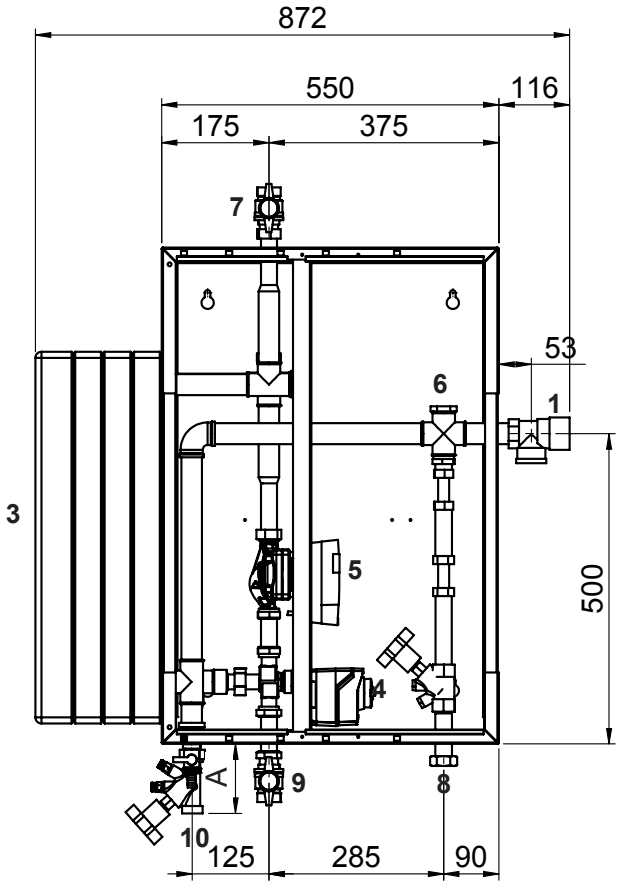

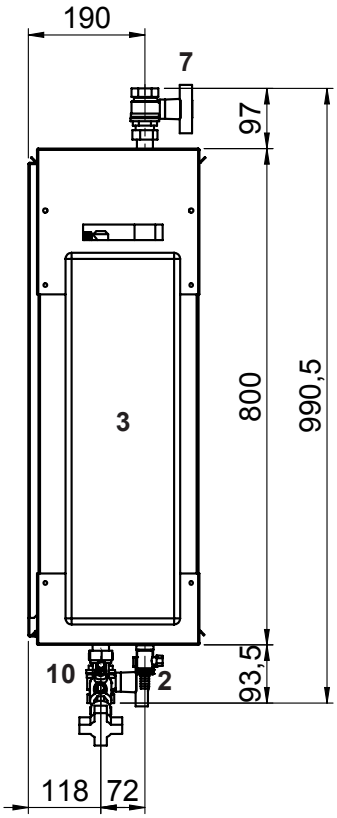

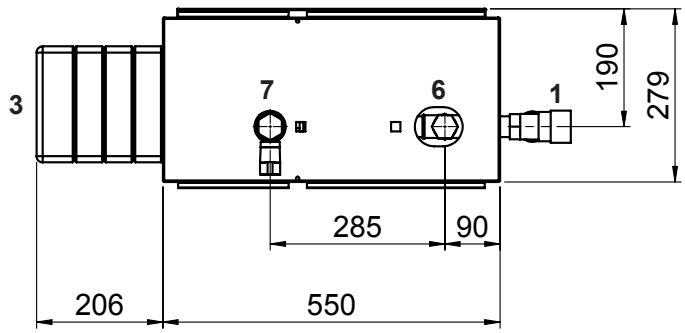

Version incl. circulation set

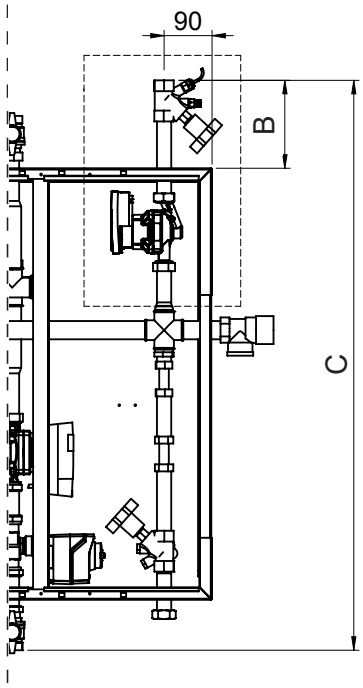

	A	B	C
(6-10)	112	163	1056
(6-16)	112	163	1045
(6-20)	133	246	1143

		(6-10) (6-16) (6-20)
1	Safety valve Hot water 10 bar	
2	Filling/drain valve	
3	Heat exchanger	
4	Primary three-way valve	
5	Primary circulating pump	
6	Circulation	DN 25, Rp 1″ (20, Rp ¾″) (IT)
7	Hot water	DN 25, Rp 1″ (IT)
8	Cold water	DN 25, Gp 1″ (IT)
9	Flow heating water	DN 25, Rp 1″ (IT)
10	Return heating water	DN 20, Gp 1″ (IT)

Gp = straight internal thread

Charging module TransTherm® aqua F (6-30 to 6-50)

(Dimensions in mm)

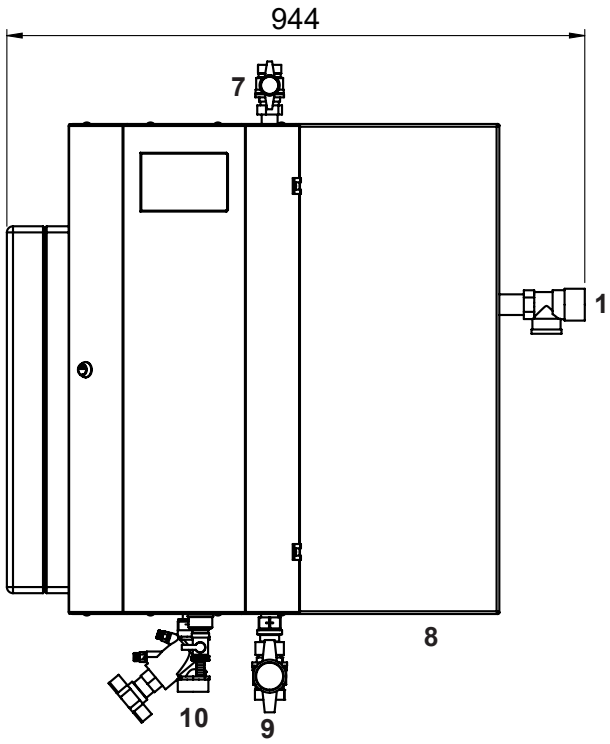

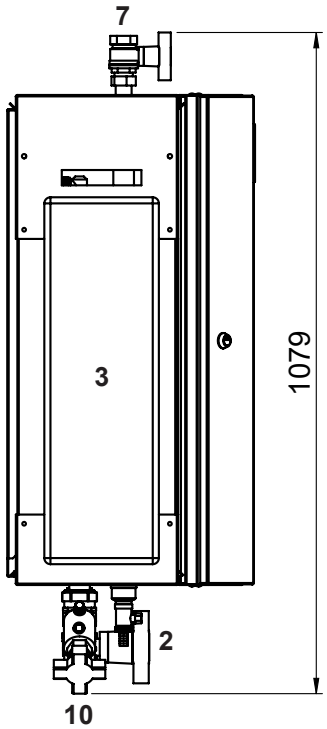

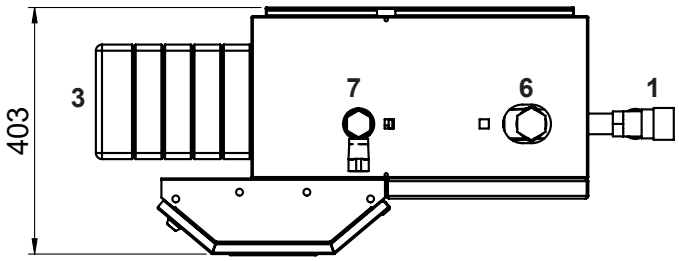

1 Safety valve
Hot water 10 bar
2 Filling/drain valve
3 Heat exchanger

		(6-30) (6-40) (6-50)
6	Circulation	DN 32, Rp 1 ¼″ (25 Rp 1″) (20 Rp ¾″) (IT)
7	Hot water	DN 32, Rp 1 ¼″ (IT)
8	Cold water	DN 32, Rp 1 ¼″ (IT)
9	Flow heating water	DN 32, Rp 1 ¼″ (IT)
10	Return heating water	DN 32, Rp 1 ¼″ (IT)

TransTherm® aqua F	Weight in kg
(6-30)	62
(6-40)	64
(6-50)	66

Charging module TransTherm® aqua F (6-30 to 6-50)

(Dimensions in mm)

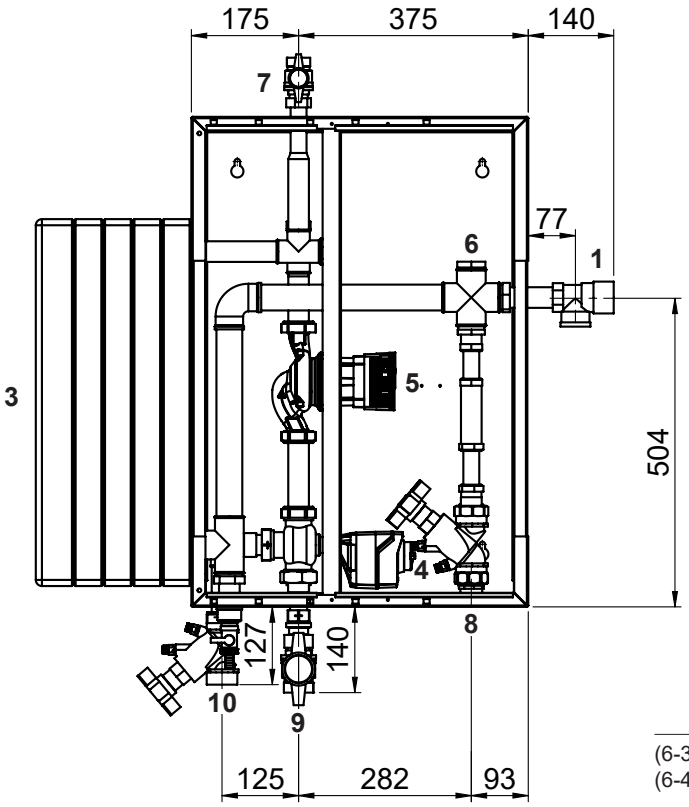

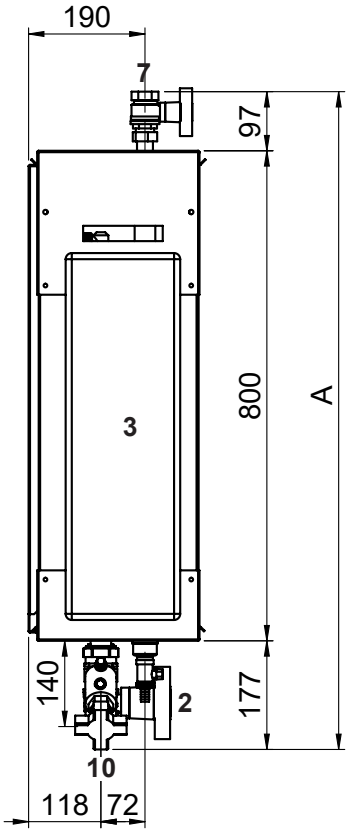

	A
(6-30)	140
(6-40), (6-50)	101

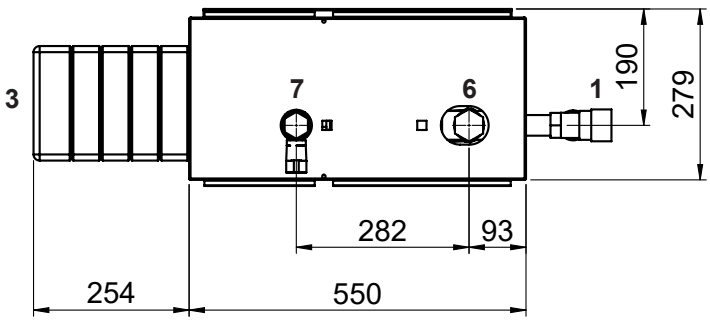

Version incl. circulation set

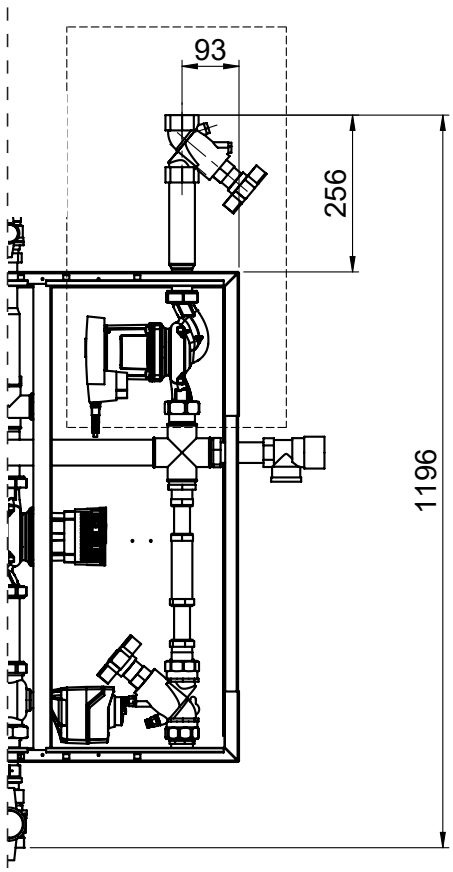

1 Safety valve
Hot water 10 bar
2 Filling/drain valve
3 Heat exchanger
4 Primary three-way valve
5 Primary circulating pump

		(6-30) (6-40) (6-50)
6	Circulation	DN 32, Rp 1 ¼″ (25 Rp 1″) (20 Rp ¾″) (IT)
7	Hot water	DN 32, Rp 1 ¼″ (IT)
8	Cold water	DN 32, Rp 1 ¼″ (IT)
9	Flow heating water	DN 32, Rp 1 ¼″ (IT)
10	Return heating water	DN 32, Rp 1 ¼″ (IT)

Water heating

TransTherm® aqua F

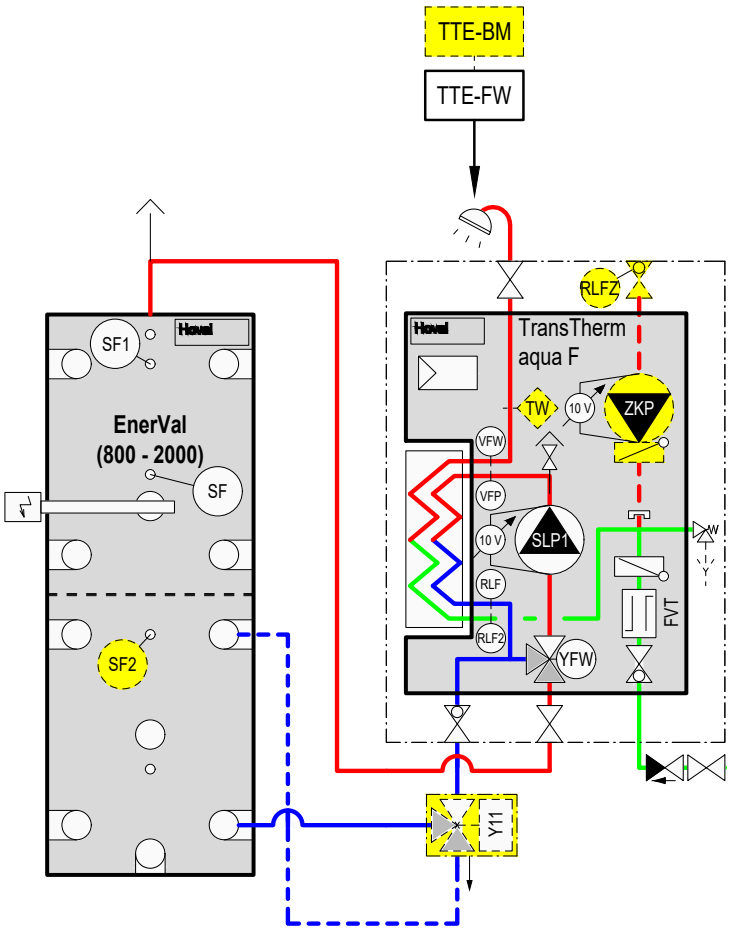

TTE-FW	Basic module district heating/fresh water
TW	Flow temperature monitor (if required)
VFP	Flow sensor primary
VFW	Flow sensor DHW
RLF	Return sensor primary
RLF2	Return sensor cold water
SF	Calorifier sensor
SF1	Calorifier sensor 1
RLFZ	Circulation sensor
SLP1	Calorifier charging pump primary
FVT	Flow rate sensor
YFW	Three-way valve with actuator
ZKP	Recirculation pump
Y11	Return switching with actuator

Option

BM	TopTronic® E control module
SF2	Calorifier sensor 2

Calorifier continuous flow system

Consisting of:
- fresh water module TransTherm® aqua F
- buffer storage tank (option)

Fresh water module TransTherm® aqua F

- Fully installed station with plate heat exchanger for the provision of domestic hot water using the continuous flow principle
- Mounted on stand frame.
  Stand frame consisting of:
  - frame with corrosion protection coating RAL 9005
  - height-adjustable and vibration-damped feet
- The primary side (heating side) contains the three-way valve, high-efficiency pump, ventilation, filling/drain valves and balancing valve. These components ensure a constant flow temperature at the plate heat exchanger. Pipes made from steel
- The secondary side (DHW side) contains the safety valve (10 bar), non-return valve and a filling/drain valve. A flow sensor ensures the correct hot water temperature. Pipes made from stainless steel
- Stainless steel plate heat exchanger 1.4404, copper-soldered
- Flow rate sensor
- T-piece with dummy plug for on-site connection of the circulation group. Connect the pump to the controller on site.
- TopTronic® E control with integrated thermal disinfection of the DHW storage tank (anti-legionella circuit)

Thermal insulation consisting of:
- thermal insulation of the heat exchanger with 30-mm EPP mouldings
- thermal insulation of the pipes with EPP mouldings. Insulation thickness of 50 % according to EnEV
- deep black, similar to RAL 9005
- suitable for damp rooms
- CFC-free
- normal flammability according to DIN 4102-1 and EN 13501-1 (fuel class: B2)
- no bleaching and disintegration of the insulation under the influence of UV light

Delivery
- The buffer storage tank required is not included in the scope of delivery

On site
- Installation of a circulation unit;
  the necessary connection is provided.
- Electrical connection of the controller

TopTronic® E controller

TopTronic® E basic module district heating/ fresh water
- Control unit for controlling district heating systems in non-communicative networks and the corresponding consumers with integrated control functions for
  - primary valve control
  - cascade management
  - 1 heating/cooling circuit with mixer
  - 1 heating/cooling circuit without mixer
  - 1 hot water charging circuit
  - various additional functions

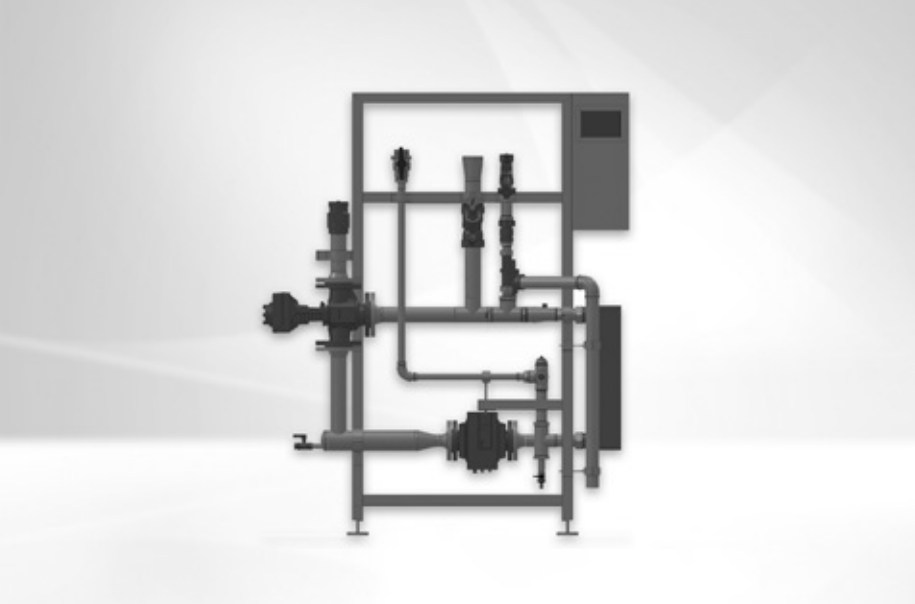

Range
Fresh water module

TransTherm® aqua F type	Output kW
(6-60)	350
(6-70)	450
(6-80)	580
(6-90)	700

- Various functions for hot water:
  - selection of different basic programs (week programs, economy mode, holiday until, etc.)
  - various operating modes (e.g. accumulator priority or parallel mode)
  - buffer storage circuit on the primary or secondary side
  - adjustable loading criteria (e.g.: adjustable loading times, undershooting the minimum nominal value, etc.)
  - adjustable switch-off criteria (e.g. achieving the setpoint valve, achieving the lower sensor setpoint value, etc.)
  - adjustable loading block (if the loading flow temperature is too low, the setpoint temperature is not reached, differential temperature-dependent solar circuit control)
- Definable switching times for recirculation pump control
- Outdoor sensor
- Immersion sensor (calorifier sensor)
- Contact sensor (flow temperature sensor)
- Complete plug set for DH module
- RPM-regulated pumps

No further module expansions or controller modules can be installed in the control panel!

Option

TopTronic® E control module
- Simple, intuitive operating concept
- Display of the most important operating states
- Configurable start screen
- Operating mode selection
- Configurable day and week programs
- Operation of all connected Hoval CAN bus modules
- Commissioning wizard
- Service and maintenance function
- Fault message management
- Analysis function
- Weather display (with HovalConnect option)
- Adaptation of the heating strategy based on the weather forecast (with HovalConnect option)

Notice
The TopTronic® E control module for operating the basic module district heating/fresh water must be ordered separately!

Further information about the TopTronic® E
see “Controls”

Delivery
- All armatures required for operation, such as strainers, flow balancing and shut-off valves, backflow preventer, air-bleeding and drain valve are fitted.

Caution
As a result of thermal disinfection of the domestic hot water for legionella protection, increased water temperatures (at least 65-70 °C) occur. Depending on the water quality, this may result in increased calcification at the installed armatures and heat exchangers and also brings the risk of scalding at the tapping points. Corresponding protective measures must be implemented on site.

Fresh water module

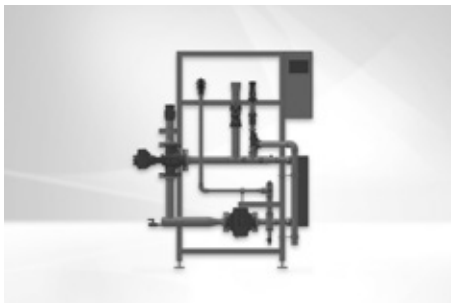

TransTherm® aqua F

Fully assembled station with plate heat exchanger for the provision of domestic hot water using the continuous flow principle and built-in Hoval TopTronic® E control.
The required buffer storage tank is not supplied.

TransTherm® aqua F	Output kW	Part No.
(6-60)	350	8006 393
(6-70)	450	8006 394
(6-80)	580	8006 395
(6-90)	700	8006 396

Accessories

Part No.

TopTronic® E control module black with 4.3″ colour touchscreen
For operation of all controller modules connected to the bus system (basic, solar, buffer modules etc.)
Connection to the Hoval bus system via RJ45 plug connection or via plug terminals (max. 0.75 mm²), flat design with flexible installation option
Installation:
- in control panel of the heat generator
- in the Hoval wall casing
- in the control panel front,

black high-gloss cover, customer-specific configurable start screen,
Display of current weather or weather forecast (only possible in combination with HovalConnect)

Consisting of:
- TopTronic® E control module black
- Clamping device set control module
- RJ45-RAST 5 CAN cable, L = 500

6043 844

Return changeover valve set
Consisting of:
- Temperature sensor
- Changeover valve
- Drive (8 sec.)
- Seals
- Screw connections

Nominal diameter	Output kW	kvs m³/h	Part No.
DN 20	50-90	6.3	7010 832
DN 25	115-175	10	7010 836
DN 32	230-275	16	7011 009
DN 40	350	25	7011 025
DN 50	450	40	7016 331
DN 65	580	63	7016 332
DN 80	700	100	7016 333

Notice
When using a circulation set (also on-site recirculation pump), it is imperative to install a return switching valve set.

Circulation set
for TransTherm® aqua L, F
Piping of parts in contact with domestic water in stainless steel and gunmetal
Consisting of:
- Temperature sensor PT1000
- Recirculation pump Wilo Yonos PARA
- Recirculation pump Wilo Para MAXO
- Regulating valve
- Non-return valve

Connection	Flow rate m³/h	Recirculation pump	Part No.
DN 20 ¾″ Rp	1.9	Z15/7.0 RKC	8005 279
DN 25 1″ Rp	3.4	Z25/180/08/F02	8005 280
DN 32 1¼″ Rp	5.8	Z25/180/08/F02	8005 281

	Part No.
 **Test valve DN 8 G ¼″** for TransTherm® aqua L, F, FS Test valve suitable for flame treatment for hygienic-microbiologic tests.	2049 861

Sludge separator with magnet MB3/L DN 25...DN 50
Fast and continuous removal of ferromagnetic and non-magnetic dirt and sludge particles.
Sludge separation up to a particle size of 5 µm.
Brass housing
Max. operating pressure: 6 bar
Max. flow temperature: 110 °C

Type	Connection	Flow rate m³/h at 1 m/s flow speed	Part No.
MB3 DN 25	Rp 1″	2.0	2062 165
MBL DN 32	Rp 1¼″	3.6	2062 166
MBL DN 40	Rp 1½″	5.0	2062 167
MBL DN 50	Rp 2″	7.5	2062 168

Additional sludge separators
see “Various system components”

Temperature monitor 0…120 °C — 2048 299
for TransTherm® aqua L, F, FS

Safety temperature monitor 70…130 °C — 2048 300
for TransTherm® aqua L, F, FS

Safety temperature limiter 70…130 °C — 2049 619
for TransTherm® aqua L, F, FS

Immersion sleeve G ½″ stainless steel for thermostat — 2048 285
for TransTherm® aqua L, F, FS
Installation length = 100 mm
Outer Ø: 8 mm, inner Ø: 6.5 mm

Immersion sleeve G ½″ stainless steel for 2 thermostats — 2048 288
for TransTherm® aqua L, F, FS
Installation length = 100 mm
Outer Ø: 15 mm, inner Ø: 13.5 mm

Services

Commissioning
Commissioning by works service or Hoval trained authorised serviceman/company is condition for warranty.

For commissioning and other services please contact your Hoval sales office.

Part No.

Performance data

TransTherm® aqua F (6-60 to 6-90)

Domestic water secondary	TransTherm® aqua F		Heating water temperature flow 52 °C (60)	52 °C (70)	52 °C (80)	52 °C (90)	55 °C (60)	55 °C (70)	55 °C (80)	55 °C (90)	60 °C (60)	60 °C (70)	60 °C (80)	60 °C (90)
60/5 °C	T return primary	°C	-	-	-	-	-	-	-	-	-	-	-	-
	V̇ primary	**m³/h**	-	-	-	-	-	-	-	-	-	-	-	-
	Q max.	kW	-	-	-	-	-	-	-	-	-	-	-	-
	V̇ secondary	**m³/h**	-	-	-	-	-	-	-	-	-	-	-	-
60/10 °C	T return primary	°C	-	-	-	-	-	-	-	-	-	-	-	-
	V̇ primary	**m³/h**	-	-	-	-	-	-	-	-	-	-	-	-
	Q max.	kW	-	-	-	-	-	-	-	-	-	-	-	-
	V̇ secondary	**m³/h**	-	-	-	-	-	-	-	-	-	-	-	-
60/15 °C	T return primary	°C	-	-	-	-	-	-	-	-	-	-	-	-
	V̇ primary	**m³/h**	-	-	-	-	-	-	-	-	-	-	-	-
	Q max.	kW	-	-	-	-	-	-	-	-	-	-	-	-
	V̇ secondary	**m³/h**	-	-	-	-	-	-	-	-	-	-	-	-
60/20 °C	T return primary	°C	-	-	-	-	-	-	-	-	-	-	-	-
	V̇ primary	**m³/h**	-	-	-	-	-	-	-	-	-	-	-	-
	Q max.	kW	-	-	-	-	-	-	-	-	-	-	-	-
	V̇ secondary	**m³/h**	-	-	-	-	-	-	-	-	-	-	-	-
55/5 °C	T return primary	°C	-	-	-	-	-	-	-	-	28	28	28	27
	V̇ primary	**m³/h**	-	-	-	-	-	-	-	-	**7.27**	**10.06**	**12.62**	**15.81**
	Q max.	kW	-	-	-	-	-	-	-	-	270	370	470	600
	V̇ secondary	**m³/h**	-	-	-	-	-	-	-	-	**4.68**	**6.42**	**8.15**	**10.4**
55/10 °C	T return primary	°C	-	-	-	-	-	-	-	-	30	29	29	29
	V̇ primary	**m³/h**	-	-	-	-	-	-	-	-	**7.30**	**9.04**	**11.82**	**14.63**
	Q max.	kW	-	-	-	-	-	-	-	-	255	320	420	530
	V̇ secondary	**m³/h**	-	-	-	-	-	-	-	-	**4.91**	**6.17**	**8.09**	**10.21**
55/15 °C	T return primary	°C	-	-	-	-	-	-	-	-	30	30	30	30
	V̇ primary	**m³/h**	-	-	-	-	-	-	-	-	**5.20**	**7.23**	**9.25**	**13.01**
	Q max.	kW	-	-	-	-	-	-	-	-	180	250	320	450
	V̇ secondary	**m³/h**	-	-	-	-	-	-	-	-	**3.90**	**5.42**	**6.94**	**9.75**
55/20 °C	T return primary	°C	-	-	-	-	-	-	-	-	30	30	30	30
	V̇ primary	**m³/h**	-	-	-	-	-	-	-	-	**3.18**	**4.34**	**5.78**	**7.51**
	Q max.	kW	-	-	-	-	-	-	-	-	110	150	200	260
	V̇ secondary	**m³/h**	-	-	-	-	-	-	-	-	**2.73**	**3.72**	**4.95**	**6.44**
50/5 °C	T return primary	°C	-	-	-	-	25	25	25	24	22	22	21	21
	V̇ primary	**m³/h**	-	-	-	-	**7.32**	**8.93**	**11.59**	**14.69**	**7.17**	**9.14**	**11.65**	**13.93**
	Q max.	kW	-	-	-	-	250	310	405	520	315	405	520	630
	V̇ secondary	**m³/h**	-	-	-	-	**4.82**	**5.97**	**7.80**	**10.02**	**6.07**	**7.80**	**10.02**	**12.14**
50/10 °C	T return primary	°C	-	-	-	-	27	27	27	26	24	24	24	23
	V̇ primary	**m³/h**	-	-	-	-	**7.17**	**8.95**	**11.64**	**14.45**	**6.78**	**8.62**	**11.52**	**13.16**
	Q max.	kW	-	-	-	-	230	290	380	480	280	360	485	560
	V̇ secondary	**m³/h**	-	-	-	-	**4.99**	**6.29**	**8.24**	**10.4**	**6.07**	**7.80**	**10.51**	**12.14**
50/15 °C	T return primary	°C	-	-	-	-	29	29	29	28	26	26	26	26
	V̇ primary	**m³/h**	-	-	-	-	**7.25**	**9.24**	**11.63**	**14.5**	**6.31**	**8.10**	**10.97**	**12.35**
	Q max.	kW	-	-	-	-	215	275	350	445	245	315	430	490
	V̇ secondary	**m³/h**	-	-	-	-	**5.33**	**6.81**	**8.67**	**11.02**	**6.07**	**7.80**	**10.65**	**12.14**
50/20 °C	T return primary	°C	-	-	-	-	30	30	30	30	30	29	29	29
	V̇ primary	**m³/h**	-	-	-	-	**5.03**	**6.59**	**9.02**	**11.96**	**6.00**	**7.6**	**10.35**	**11.6**
	Q max.	kW	-	-	-	-	145	190	260	345	210	270	370	420
	V̇ secondary	**m³/h**	-	-	-	-	**4.20**	**5.49**	**7.51**	**9.97**	**6.07**	**7.80**	**10.69**	**12.14**
45/5 °C	T return primary	°C	21	21	21	20	20	19	19	19	18	18	18	17
	V̇ primary	**m³/h**	**7.20**	**8.95**	**11.53**	**14.54**	**6.90**	**8.77**	**11.62**	**13.4**	**5.77**	**7.36**	**10.00**	**11.26**
	Q max.	kW	255	320	415	530	280	360	480	560	280	360	490	560
	V̇ secondary	**m³/h**	**5.53**	**6.94**	**9.00**	**11.50**	**6.07**	**7.80**	**10.4**	**12.14**	**6.07**	**7.80**	**10.62**	**12.14**
45/10 °C	T return primary	°C	23	23	23	23	22	22	22	21	20	20	20	19
	V̇ primary	**m³/h**	**7.12**	**9.21**	**11.51**	**14.45**	**6.44**	**8.23**	**11.13**	**12.57**	**5.36**	**6.86**	**9.27**	**7.24**
	Q max.	kW	235	305	385	490	245	315	430	490	245	315	430	490
	V̇ secondary	**m³/h**	**5.82**	**7.56**	**9.54**	**12.14**	**6.07**	**7.80**	**10.65**	**12.14**	**6.07**	**7.80**	**10.65**	**12.14**
45/15 °C	T return primary	°C	25	25	25	25	25	24	24	24	23	22	22	22
	V̇ primary	**m³/h**	**6.10**	**8.03**	**10.67**	**13.49**	**6.01**	**7.63**	**10.38**	**11.63**	**4.88**	**6.23**	**8.51**	**9.53**
	Q max.	kW	190	250	335	420	210	270	370	420	210	270	370	420
	V̇ secondary	**m³/h**	**5.49**	**7.23**	**9.68**	**12.14**	**6.07**	**7.80**	**10.69**	**12.14**	**6.07**	**7.80**	**10.69**	**12.14**
45/20 °C	T return primary	°C	25	25	25	25	27	27	27	27	25	25	25	25
	V̇ primary	**m³/h**	**2.73**	**3.53**	**4.66**	**6.42**	**5.46**	**6.97**	**9.57**	**10.65**	**4.37**	**5.59**	**7.68**	**8.57**
	Q max.	kW	85	110	145	200	175	225	310	350	175	225	310	350
	V̇ secondary	**m³/h**	**2.95**	**3.82**	**5.03**	**6.94**	**6.07**	**7.80**	**10.75**	**12.14**	**6.07**	**7.80**	**10.75**	**12.14**

T return primary	°C	Temperature primary return
V̇ primary	**m³/h**	Flow rate primary
Q max.	kW	Output
V̇ secondary	**m³/h**	Flow rate secondary

The specified technical data relate to the full load of the module in each case.

Performance data

TransTherm® aqua F (6-60 to 6-90)

Domestic water secondary	TransTherm® aqua F		Heating water temperature flow 65 °C (60)	65 °C (70)	65 °C (80)	65 °C (90)	70 °C (60)	70 °C (70)	70 °C (80)	70 °C (90)
60/5 °C	T return primary	°C	30	30	30	29	26	26	25	25
	V̇ primary	**m³/h**	**7.15**	**9.17**	**11.72**	**14.69**	**7.42**	**9.40**	**11.66**	**14.64**
	Q max.	kW	290	370	480	610	375	480	60	760
	V̇ secondary	**m³/h**	**4.57**	**5.83**	**7.57**	**9.62**	**5.91**	**7.57**	**9.46**	**11.98**
60/10 °C	T return primary	°C	30	30	30	30	28	28	28	27
	V̇ primary	**m³/h**	**5.45**	**6.94**	**9.41**	**12.88**	**7.23**	**9.29**	**11.92**	**14.15**
	Q max.	kW	220	280	380	520	350	450	580	700
	V̇ secondary	**m³/h**	**3.82**	**4.86**	**6.59**	**9.02**	**6.07**	**7.80**	**10.06**	**12.14**
60/15 °C	T return primary	°C	30	30	30	30	30	30	30	30
	V̇ primary	**m³/h**	**3.72**	**4.83**	**6.44**	**8.67**	**6.72**	**8.78**	**11.73**	**13.49**
	Q max.	kW	150	195	260	350	310	405	540	630
	V̇ secondary	**m³/h**	**2.89**	**3.76**	**5.01**	**6.74**	**5.97**	**7.80**	**10.4**	**12.14**
60/20 °C	T return primary	°C	30	30	30	30	30	30	30	30
	V̇ primary	**m³/h**	**2.11**	**2.85**	**3.72**	**4.95**	**4.34**	**5.64**	**7.37**	**9.97**
	Q max.	kW	85	115	150	200	200	260	340	460
	V̇ secondary	**m³/h**	**1.84**	**2.49**	**3.25**	**4.34**	**4.34**	**5.64**	**7.37**	**9.97**
55/5 °C	T return primary	°C	24	24	23	23	22	21	21	21
	V̇ primary	**m³/h**	**7.42**	**9.24**	**11.64**	**14.38**	**6.30**	**8.03**	**10.99**	**12.26**
	Q max.	kW	350	440	560	700	350	450	620	700
	V̇ secondary	**m³/h**	**6.07**	**7.63**	**9.71**	**12.14**	**6.07**	**7.80**	**10.75**	**12.14**
55/10 °C	T return primary	°C	26	26	26	25	24	24	24	23
	V̇ primary	**m³/h**	**7.06**	**8.96**	**11.66**	**13.66**	**5.96**	**7.6**	**10.25**	**11.6**
	Q max.	kW	315	405	530	630	315	405	550	630
	V̇ secondary	**m³/h**	**6.07**	**7.80**	**10.21**	**12.14**	**6.07**	**7.80**	**10.6**	**12.14**
55/15 °C	T return primary	°C	29	28	28	27	27	26	26	26
	V̇ primary	**m³/h**	**6.67**	**8.48**	**11.48**	**12.91**	**5.62**	**7.16**	**9.70**	**10.96**
	Q max.	kW	280	360	490	560	280	360	490	560
	V̇ secondary	**m³/h**	**6.07**	**7.80**	**10.62**	**12.14**	**6.07**	**7.80**	**10.62**	**12.14**
55/20 °C	T return primary	°C	30	30	30	30	29	29	29	28
	V̇ primary	**m³/h**	**5.95**	**7.80**	**10.4**	**12.14**	**5.13**	**6.64**	**9.01**	**10.16**
	Q max.	kW	240	315	420	490	245	315	430	490
	V̇ secondary	**m³/h**	**5.95**	**7.80**	**10.4**	**12.14**	**6.07**	**7.80**	**10.65**	**12.14**
50/5 °C	T return primary	°C	20	20	19	19	18	18	17	17
	V̇ primary	**m³/h**	**6.06**	**7.72**	**10.43**	**11.77**	**5.30**	**6.74**	**9.05**	**10.27**
	Q max.	kW	315	405	550	630	315	405	550	630
	V̇ secondary	**m³/h**	**6.07**	**7.80**	**10.6**	**12.14**	**6.07**	**7.80**	**10.6**	**12.14**
50/10 °C	T return primary	°C	22	22	22	21	21	20	20	19
	V̇ primary	**m³/h**	**5.69**	**7.28**	**9.81**	**11.08**	**4.90**	**6.24**	**8.46**	**9.57**
	Q max.	kW	280	360	490	560	280	360	490	560
	V̇ secondary	**m³/h**	**6.07**	**7.80**	**10.62**	**12.14**	**6.07**	**7.80**	**10.62**	**12.14**
50/15 °C	T return primary	°C	25	25	24	24	23	23	22	22
	V̇ primary	**m³/h**	**5.30**	**6.74**	**9.14**	**10.29**	**4.52**	**5.76**	**7.82**	**8.83**
	Q max.	kW	245	315	430	490	245	315	430	490
	V̇ secondary	**m³/h**	**6.07**	**7.80**	**10.65**	**12.14**	**6.07**	**7.80**	**10.65**	**12.14**
50/20 °C	T return primary	°C	27	26	27	26	26	26	25	25
	V̇ primary	**m³/h**	**4.84**	**6.00**	**8.38**	**9.43**	**4.12**	**5.26**	**7.16**	**8.07**
	Q max.	kW	210	270	370	420	210	270	370	420
	V̇ secondary	**m³/h**	**6.07**	**7.80**	**10.69**	**12.14**	**6.07**	**7.80**	**10.69**	**12.14**
45/5 °C	T return primary	°C	16	16	16	15	15	14	14	13
	V̇ primary	**m³/h**	**4.99**	**6.34**	**8.58**	**9.69**	**4.39**	**5.59**	**7.59**	**8.58**
	Q max.	kW	280	360	490	560	280	360	490	560
	V̇ secondary	**m³/h**	**6.07**	**7.80**	**10.62**	**12.14**	**6.07**	**7.80**	**10.62**	**12.14**
45/10 °C	T return primary	°C	19	18	18	18	17	17	17	16
	V̇ primary	**m³/h**	**4.57**	**5.85**	**7.92**	**8.94**	**4.02**	**5.13**	**6.98**	**7.90**
	Q max.	kW	245	315	430	490	245	315	430	490
	V̇ secondary	**m³/h**	**6.07**	**7.80**	**10.65**	**12.14**	**6.07**	**7.80**	**10.65**	**12.14**
45/15 °C	T return primary	°C	21	21	21	20	20	20	20	19
	V̇ primary	**m³/h**	**4.15**	**5.30**	**7.24**	**8.15**	**3.64**	**4.66**	**6.37**	**7.18**
	Q max.	kW	210	270	370	420	210	270	370	420
	V̇ secondary	**m³/h**	**6.07**	**7.80**	**10.69**	**12.14**	**6.07**	**7.80**	**10.69**	**12.14**
45/20 °C	T return primary	°C	24	24	24	24	23	23	23	23
	V̇ primary	**m³/h**	**3.71**	**4.75**	**6.51**	**7.31**	**3.24**	**4.15**	**5.71**	**6.42**
	Q max.	kW	175	225	310	350	175	225	310	350
	V̇ secondary	**m³/h**	**6.07**	**7.80**	**10.75**	**12.14**	**6.07**	**7.80**	**10.75**	**12.14**

T return primary	°C	Temperature primary return
V̇ primary	**m³/h**	Flow rate primary
Q max.	kW	Output
V̇ secondary	**m³/h**	Flow rate secondary

The specified technical data relate to the full load of the module in each case.

Performance data

TransTherm® aqua F

Residential units standard apartment according to DIN 4708	Peak heat demand standard apartment according to DIN 4708 with preparation 10 min	Sum flow rate domestic hot water calcu-lation flow rate according to DIN 4708	Simultaneity factor according to DIN 4708	Peak flow rate (DHW)	Peak flow rate (DHW)	Peak flow rate (DHW)	Peak output (DHW)	Peak flow rate TransTherm® aqua F (DHW)	Peak flow rate TransTherm® aqua F (DHW)	Peak flow rate TransTherm® aqua F (DHW)	DHW calorifier output TransTherm® aqua F	TransTherm® aqua F	Required hot water volume at 70/30 °C (40 K)	Required hot water buffer storage tank volume at 70/30 °C (40 K)	Hot water buffer storage tank 1 EnerVal	Required recharging capacity	Required recharging capacity	Required recharging capacity
N	Prepara-tion	∑ VR at DHW 60 °C	g	V̇s at DHW 60 °C	V̇s at DHW 60 °C	V̇s at DHW 60 °C		V̇s at DHW 60 °C	V̇s at DHW 60 °C	V̇s at DHW 60 °C	Q at HT 70/30 °C DHW 10/60 °C	Type			Type	Time: 20 min 70/30 °C (40 K)	Time: 30 min 70/30 °C (40 K)	Time: 60 min 70/30 °C (40 K)
	[Wh]	[l/s]		[l/s]	[l/min]	[m³/h]	[kW]	[l/s]	[l/min]	[m³/h]	[kW]		[m³]	[m³]		[kW]	[kW]	[kW]
1	5820	0.17	1.00	0.17	10.01	0.60	35	0.24	14.3	0.86	50	(6-10)	0.13	0.16	(200)	23	15	8
2	11640	0.33	0.680	0.23	13.61	0.82	47	0.24	14.3	0.86	50	(6-10)	0.17	0.22	(200)	31	21	10
3	17460	0.50	0.544	0.27	16.33	0.98	57	0.43	25.8	1.55	90	(6-16)	0.20	0.27	(300)	37	25	12
4	23280	0.67	0.466	0.31	18.66	1.12	65	0.43	25.8	1.55	90	(6-16)	0.23	0.30	(300)	42	28	14
5	29100	0.83	0.415	0.35	20.77	1.25	72	0.43	25.8	1.55	90	(6-16)	0.26	0.34	(500)	47	31	16
6	34920	1.00	0.377	0.38	22.64	1.36	79	0.43	25.8	1.55	90	(6-16)	0.28	0.37	(500)	51	34	17
7	40740	1.17	0.349	0.41	24.45	1.47	85	0.43	25.8	1.55	90	(6-16)	0.31	0.40	(500)	55	37	18
8	46560	1.33	0.349	0.47	27.94	1.68	97	0.55	33.0	1.98	115	(6-20)	0.35	0.45	(500)	63	42	21
9	52380	1.50	0.308	0.46	27.74	1.66	97	0.55	33.0	1.98	115	(6-20)	0.35	0.45	(500)	63	42	21
10	58200	1.67	0.292	0.49	29.23	1.75	102	0.55	33.0	1.98	115	(6-20)	0.37	0.47	(500)	66	44	22
11	64020	1.83	0.279	0.51	30.72	1.84	107	0.55	33.0	1.98	115	(6-20)	0.38	0.50	(500)	70	46	23
12	69840	2.00	0.268	0.54	32.19	1.93	112	0.55	33.0	1.98	115	(6-20)	0.40	0.52	(500)	73	49	24
13	75660	2.17	0.258	0.56	33.57	2.01	117	0.55	33.0	1.98	115	(6-20)	0.42	0.55	(500)	76	51	25
14	81480	2.34	0.249	0.58	34.89	2.09	122	0.84	50.2	3.01	175	(6-30)	0.44	0.57	(500)	79	53	26
15	87300	2.50	0.242	0.61	36.33	2.18	127	0.84	50.2	3.01	175	(6-30)	0.45	0.59	(800)	82	55	27
16	93120	2.67	0.235	0.63	37.63	2.26	131	0.84	50.2	3.01	175	(6-30)	0.47	0.61	(800)	85	57	28
17	98940	2.84	0.228	0.65	38.79	2.33	135	0.84	50.2	3.01	175	(6-30)	0.49	0.63	(800)	88	59	29
18	104760	3.00	0.223	0.67	40.17	2.41	140	0.84	50.2	3.01	175	(6-30)	0.50	0.65	(800)	91	61	30
19	110580	3.17	0.217	0.69	41.27	2.48	144	0.84	50.2	3.01	175	(6-30)	0.52	0.67	(800)	94	62	31
20	116400	3.34	0.212	0.71	42.44	2.55	148	0.84	50.2	3.01	175	(6-30)	0.53	0.69	(800)	96	64	32
21	122220	3.50	0.208	0.73	43.72	2.62	153	0.84	50.2	3.01	175	(6-30)	0.55	0.71	(800)	99	66	33
22	128040	3.67	0.204	0.75	44.92	2.70	157	0.84	50.2	3.01	175	(6-30)	0.56	0.73	(800)	102	68	34
23	133860	3.84	0.200	0.77	46.04	2.76	161	0.84	50.2	3.01	175	(6-30)	0.58	0.75	(800)	104	70	35
24	139680	4.00	0.196	0.78	47.08	2.82	164	0.84	50.2	3.01	175	(6-30)	0.59	0.77	(800)	107	71	36
25	145500	4.17	0.193	0.80	48.29	2.90	168	0.84	50.2	3.01	175	(6-30)	0.60	0.78	(800)	110	73	37
26	151320	4.34	0.190	0.82	49.44	2.97	173	0.84	50.2	3.01	175	(6-30)	0.62	0.80	(800)	112	75	37
27	157140	4.50	0.187	0.84	50.53	3.03	176	0.84	50.2	3.01	175	(6-30)	0.63	0.82	(800)	115	76	38
28	162960	4.67	0.184	0.86	51.56	3.09	180	0.84	50.2	3.01	175	(6-30)	0.64	0.84	(800)	117	78	39
29	168780	4.84	0.181	0.88	52.54	3.15	183	1.10	65.8	3.95	230	(6-40)	0.66	0.85	(800)	119	79	40
30	174600	5.00	0.179	0.90	53.75	3.22	188	1.10	65.8	3.95	230	(6-40)	0.67	0.87	(1000)	122	81	41
31	180420	5.17	0.176	0.91	54.61	3.28	191	1.10	65.8	3.95	230	(6-40)	0.68	0.89	(1000)	124	83	41
32	186240	5.34	0.174	0.93	55.73	3.34	194	1.10	65.8	3.95	230	(6-40)	0.70	0.91	(1000)	126	84	42
33	192060	5.50	0.172	0.95	56.81	3.41	198	1.10	65.8	3.95	230	(6-40)	0.71	0.92	(1000)	129	86	43
34	197880	5.67	0.170	0.96	57.85	3.47	202	1.10	65.8	3.95	230	(6-40)	0.72	0.94	(1000)	131	87	44
35	203700	5.84	0.168	0.98	58.85	3.53	205	1.10	65.8	3.95	230	(6-40)	0.74	0.96	(1000)	133	89	44
36	209520	6.01	0.166	1.00	59.81	3.59	209	1.10	65.8	3.95	230	(6-40)	0.75	0.97	(1000)	136	90	45
37	215340	6.17	0.164	1.01	60.73	3.64	212	1.10	65.8	3.95	230	(6-40)	0.76	0.99	(1000)	138	92	46
38	221160	6.34	0.163	1.03	61.99	3.72	216	1.10	65.8	3.95	230	(6-40)	0.78	1.01	(1000)	141	94	47
39	226980	6.51	0.161	1.05	62.84	3.77	219	1.10	65.8	3.95	230	(6-40)	0.79	1.02	(1000)	143	95	48
40	232800	6.67	0.159	1.06	63.65	3.82	222	1.10	65.8	3.95	230	(6-40)	0.80	1.03	(1000)	144	96	48
41	238620	6.84	0.158	1.08	64.84	3.89	226	1.10	65.8	3.95	230	(6-40)	0.81	1.05	(1000)	147	98	49
42	244440	7.01	0.156	1.09	65.58	3.93	229	1.10	65.8	3.95	230	(6-40)	0.82	1.07	(1000)	149	99	50
43	250260	7.17	0.155	1.11	66.71	4.00	233	1.10	65.8	3.95	230	(6-40)	0.83	1.08	(1000)	151	101	50
44	256080	7.34	0.154	1.13	67.82	4.07	237	1.31	78.8	4.73	275	(6-50)	0.85	1.10	(1500)	154	103	51
45	261900	7.51	0.152	1.14	68.46	4.11	239	1.31	78.8	4.73	275	(6-50)	0.86	1.11	(1500)	155	104	52
46	267720	7.67	0.151	1.16	69.52	4.17	243	1.31	78.8	4.73	275	(6-50)	0.87	1.13	(1500)	158	105	53
47	273540	7.84	0.150	1.18	70.56	4.23	246	1.31	78.8	4.73	275	(6-50)	0.88	1.15	(1500)	160	107	53
48	279360	8.01	0.149	1.19	71.58	4.29	250	1.31	78.8	4.73	275	(6-50)	0.89	1.16	(1500)	162	108	54
49	285180	8.17	0.148	1.21	72.58	4.35	253	1.31	78.8	4.73	275	(6-50)	0.91	1.18	(1500)	165	110	55
50	291000	8.34	0.146	1.22	73.06	4.38	255	1.31	78.8	4.73	275	(6-50)	0.91	1.19	(1500)	166	110	55
51	296820	8.51	0.145	1.23	74.01	4.44	258	1.31	78.8	4.73	275	(6-50)	0.93	1.20	(1500)	168	112	56
52	302640	8.67	0.144	1.25	74.94	4.50	261	1.31	78.8	4.73	275	(6-50)	0.94	1.22	(1500)	170	113	57
53	308460	8.84	0.143	1.26	75.86	4.55	265	1.31	78.8	4.73	275	(6-50)	0.95	1.23	(1500)	172	115	57
54	314280	9.01	0.142	1.28	76.75	4.60	268	1.31	78.8	4.73	275	(6-50)	0.96	1.25	(1500)	174	116	58

Residential units standard apartment according to DIN 4708	Peak heat demand standard apartment according to DIN 4708 with preparation 10 min	Sum flow rate domestic hot water calcu-lation flow rate according to DIN 4708	Simultaneity factor according to DIN 4708	Peak flow rate (DHW)	Peak flow rate (DHW)	Peak flow rate (DHW)	Peak output (DHW)	Peak flow rate TransTherm® aqua F (DHW)	Peak flow rate TransTherm® aqua F (DHW)	Peak flow rate TransTherm® aqua F (DHW)	DHW calorifier output TransTherm® aqua F	TransTherm® aqua F	Required hot water volume at 70/30 °C (40 K)	Required hot water buffer storage tank volume at 70/30 °C (40 K)	Hot water buffer storage tank 1 EnerVal	Required recharging capacity	Required recharging capacity	Required recharging capacity
N	Prepara-tion	∑ VR at DHW 60 °C	g	$\dot{V}s$ at DHW 60 °C	$\dot{V}s$ at DHW 60 °C	$\dot{V}s$ at DHW 60 °C		$\dot{V}s$ at DHW 60 °C	$\dot{V}s$ at DHW 60 °C	$\dot{V}s$ at DHW 60 °C	Q at HT 70/30 °C DHW 10/60 °C	Type			Type	Time: 20 min 70/30 °C (40 K)	Time: 30 min 70/30 °C (40 K)	Time: 60 min 70/30 °C (40 K)
	[Wh]	[l/s]		[l/s]	[l/min]	[m³/h]	[kW]	[l/s]	[l/min]	[m³/h]	[kW]		[m³]	[m³]		[kW]	[kW]	[kW]
55	320100	9.17	0.141	1.29	77.62	4.66	271	1.31	78.8	4.73	275	(6-50)	0.97	1.26	(1500)	176	117	59
56	325920	9.34	0.140	1.31	78.47	4.71	274	1.31	78.8	4.73	275	(6-50)	0.98	1.28	(1500)	178	119	59
57	331740	9.51	0.140	1.33	79.87	4.79	279	1.31	78.8	4.73	275	(6-50)	1.00	1.30	(1500)	181	121	60
58	337560	9.67	0.139	1.34	80.69	4.84	282	1.69	101.2	6.07	350	(6-60)	1.01	1.31	(1500)	183	122	61
59	343380	9.84	0.138	1.36	81.49	4.89	284	1.69	101.2	6.07	350	(6-60)	1.02	1.32	(1500)	185	123	62
60	349200	10.01	0.137	1.37	82.27	4.94	287	1.69	101.2	6.07	350	(6-60)	1.03	1.34	(1500)	187	124	62
61	355020	10.18	0.136	1.38	83.03	4.98	290	1.69	101.2	6.07	350	(6-60)	1.04	1.35	(1500)	188	126	63
62	360840	10.34	0.135	1.40	83.77	5.03	292	1.69	101.2	6.07	350	(6-60)	1.05	1.36	(1500)	190	127	63
63	366660	10.51	0.135	1.42	85.12	5.11	297	1.69	101.2	6.07	350	(6-60)	1.06	1.38	(1500)	193	129	64
64	372480	10.68	0.134	1.43	85.83	5.15	299	1.69	101.2	6.07	350	(6-60)	1.07	1.40	(1500)	195	130	65
65	378300	10.84	0.133	1.44	86.52	5.19	302	1.69	101.2	6.07	350	(6-60)	1.08	1.41	(1500)	196	131	65
66	384120	11.01	0.132	1.45	87.19	5.23	304	1.69	101.2	6.07	350	(6-60)	1.09	1.42	(1500)	198	132	66
67	389940	11.18	0.132	1.48	88.52	5.31	309	1.69	101.2	6.07	350	(6-60)	1.11	1.44	(1500)	201	134	67
68	395760	11.34	0.131	1.49	89.16	5.35	311	1.69	101.2	6.07	350	(6-60)	1.11	1.45	(1500)	202	135	67
69	401580	11.51	0.130	1.50	89.78	5.39	313	1.69	101.2	6.07	350	(6-60)	1.12	1.46	(1500)	204	136	68
70	407400	11.68	0.130	1.52	91.08	5.46	318	1.69	101.2	6.07	350	(6-60)	1.14	1.48	(1500)	207	138	69
71	413220	11.84	0.129	1.53	91.67	5.50	320	1.69	101.2	6.07	350	(6-60)	1.15	1.49	(1500)	208	139	69
72	419040	12.01	0.128	1.54	92.24	5.53	322	1.69	101.2	6.07	350	(6-60)	1.15	1.50	(1500)	209	139	70
73	424860	12.18	0.128	1.56	93.52	5.61	326	1.69	101.2	6.07	350	(6-60)	1.17	1.52	(1500)	212	141	71
74	430680	12.34	0.127	1.57	94.06	5.64	328	1.69	101.2	6.07	350	(6-60)	1.18	1.53	(1500)	213	142	71
75	436500	12.51	0.127	1.59	95.33	5.72	333	1.69	101.2	6.07	350	(6-60)	1.19	1.55	(1500)	216	144	72
76	442320	12.68	0.126	1.60	95.84	5.75	334	1.69	101.2	6.07	350	(6-60)	1.20	1.56	(1500)	217	145	72
77	448140	12.84	0.126	1.62	97.10	5.83	339	1.69	101.2	6.07	350	(6-60)	1.21	1.58	(1500)	220	147	73
78	453960	13.01	0.125	1.63	97.58	5.86	340	1.69	101.2	6.07	350	(6-60)	1.22	1.59	(1500)	221	148	74
79	459780	13.18	0.124	1.63	98.04	5.88	342	1.69	101.2	6.07	350	(6-60)	1.23	1.59	(1500)	222	148	74
80	465600	13.34	0.124	1.65	99.29	5.96	346	1.69	101.2	6.07	350	(6-60)	1.24	1.61	(2000)	225	150	75
81	471420	13.51	0.123	1.66	99.72	5.98	348	1.69	101.2	6.07	350	(6-60)	1.25	1.62	(2000)	226	151	75
82	477240	13.68	0.123	1.68	100.95	6.06	352	1.69	101.2	6.07	350	(6-60)	1.26	1.64	(2000)	229	153	76
83	483060	13.85	0.122	1.69	101.35	6.08	354	1.69	101.2	6.07	350	(6-60)	1.27	1.65	(2000)	230	153	77
84	488880	14.01	0.122	1.71	102.57	6.15	358	2.17	130.0	7.80	450	(6-70)	1.28	1.67	(2000)	233	155	78
85	494700	14.18	0.121	1.72	102.94	6.18	359	2.17	130.0	7.80	450	(6-70)	1.29	1.67	(2000)	233	156	78
86	500520	14.35	0.121	1.74	104.15	6.25	363	2.17	130.0	7.80	450	(6-70)	1.30	1.69	(2000)	236	157	79
87	506340	14.51	0.120	1.74	104.49	6.27	365	2.17	130.0	7.80	450	(6-70)	1.31	1.70	(2000)	237	158	79
88	512160	14.68	0.120	1.76	105.69	6.34	369	2.17	130.0	7.80	450	(6-70)	1.32	1.72	(2000)	240	160	80
89	517980	14.85	0.120	1.78	106.89	6.41	373	2.17	130.0	7.80	450	(6-70)	1.34	1.74	(2000)	242	162	81
90	523800	15.01	0.119	1.79	107.19	6.43	374	2.17	130.0	7.80	450	(6-70)	1.34	1.74	(2000)	243	162	81
91	529620	15.18	0.119	1.81	108.38	6.50	378	2.17	130.0	7.80	450	(6-70)	1.36	1.76	(2000)	246	164	82
92	535440	15.35	0.118	1.81	108.65	6.52	379	2.17	130.0	7.80	450	(6-70)	1.36	1.77	(2000)	246	164	82
93	541260	15.51	0.118	1.83	109.83	6.59	383	2.17	130.0	7.80	450	(6-70)	1.37	1.79	(2000)	249	166	83
94	547080	15.68	0.117	1.83	110.07	6.60	384	2.17	130.0	7.80	450	(6-70)	1.38	1.79	(2000)	250	166	83
95	552900	15.85	0.117	1.85	111.25	6.67	388	2.17	130.0	7.80	450	(6-70)	1.39	1.81	(2000)	252	168	84
96	558720	16.01	0.117	1.87	112.42	6.74	392	2.17	130.0	7.80	450	(6-70)	1.41	1.83	(2000)	255	170	85
97	564540	16.18	0.116	1.88	112.62	6.76	393	2.17	130.0	7.80	450	(6-70)	1.41	1.83	(2000)	255	170	85
98	570360	16.35	0.116	1.90	113.78	6.83	397	2.17	130.0	7.80	450	(6-70)	1.42	1.85	(2000)	258	172	86
99	576180	16.51	0.116	1.92	114.94	6.90	401	2.17	130.0	7.80	450	(6-70)	1.44	1.87	(2000)	261	174	87
100	582000	16.68	0.115	1.92	115.10	6.91	402	2.17	130.0	7.80	450	(6-70)	1.44	1.87	(2000)	261	174	87

Performance data

TransTherm® aqua F (6-60)

Performance data		Q	VS	VS	VS	Energy storage tank
primary	secondary	kW	l/s	l/min	m³/h	min. content in l [1]
70 °C/30 °C	10 °C/60 °C	350	1.67	100.33	6.02	1405
65 °C/30 °C	10 °C/60 °C	220	1.05	63.07	3.78	883
65 °C/30 °C	10 °C/55 °C	315	1.67	100.33	6.02	1405
65 °C/30 °C	10 °C/50 °C	280	1.67	100.33	6.02	1405
60 °C/30 °C	10 °C/55 °C	255	1.35	81.22	4.87	1137
60 °C/30 °C	10 °C/50 °C	280	1.67	100.33	6.02	1405
55 °C/30 °C	10 °C/50 °C	230	1.37	82.42	4.95	1154
55 °C/30 °C	10 °C/45 °C	245	1.67	100.33	6.02	1405

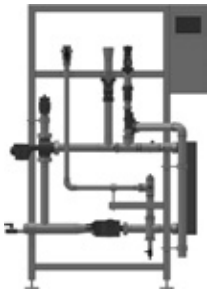

TransTherm® aqua F (6-70)

Performance data		Q	VS	VS	VS	Energy storage tank
primary	secondary	kW	l/s	l/min	m³/h	min. content in l [1]
70 °C/30 °C	10 °C/60 °C	450	2.15	129.00	7.74	1806
65 °C/30 °C	10 °C/60 °C	280	1.34	80.27	4.82	1124
65 °C/30 °C	10 °C/55 °C	405	2.15	129.00	7.74	1806
65 °C/30 °C	10 °C/50 °C	360	2.15	129.00	7.74	1806
60 °C/30 °C	10 °C/55 °C	320	1.70	101.93	6.12	1427
60 °C/30 °C	10 °C/50 °C	360	2.15	129.00	7.74	1806
55 °C/30 °C	10 °C/50 °C	290	1.73	103.92	6.24	1455
55 °C/30 °C	10 °C/45 °C	315	2.15	129.00	7.74	1806

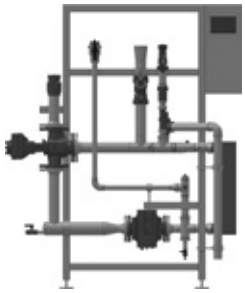

TransTherm® aqua F (6-80)

Performance data		Q	VS	VS	VS	Energy storage tank
primary	secondary	kW	l/s	l/min	m³/h	min. content in l [1]
70 °C/30 °C	10 °C/60 °C	580	2.77	166.27	9.98	2328
65 °C/30 °C	10 °C/60 °C	380	1.82	108.93	6.54	1525
65 °C/30 °C	10 °C/55 °C	530	2.81	168.81	10.13	2363
65 °C/30 °C	10 °C/50 °C	490	2.93	175.58	10.54	2458
60 °C/30 °C	10 °C/55 °C	420	2.23	133.78	8.03	1873
60 °C/30 °C	10 °C/50 °C	485	2.90	173.79	10.43	2433
55 °C/30 °C	10 °C/50 °C	380	2.27	136.17	8.17	1906
55 °C/30 °C	10 °C/45 °C	430	2.93	176.10	10.57	2465

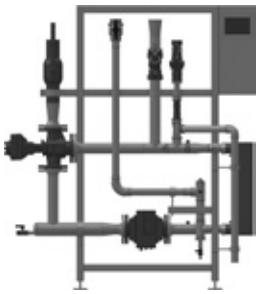

TransTherm® aqua F (6-90)

Performance data		Q	VS	VS	VS	Energy storage tank
primary	secondary	kW	l/s	l/min	m³/h	min. content in l [1]
70 °C/30 °C	10 °C/60 °C	700	3.34	200.67	12.04	2809
65 °C/30 °C	10 °C/60 °C	520	2.48	149.07	8.94	2087
65 °C/30 °C	10 °C/55 °C	630	3.34	200.67	12.04	2809
65 °C/30 °C	10 °C/50 °C	560	3.34	200.67	12.04	2809
60 °C/30 °C	10 °C/55 °C	530	2.81	168.81	10.13	2363
60 °C/30 °C	10 °C/50 °C	560	3.34	200.67	12.04	2809
55 °C/30 °C	10 °C/50 °C	480	2.87	172.00	10.32	2408
55 °C/30 °C	10 °C/45 °C	490	3.34	200.67	12.04	2809

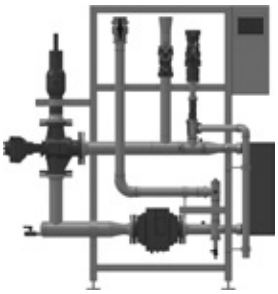

[1] The calculation for the content of the energy storage tank depends on the temperature spread.
Here, 0.7 has been set for the temperature spread and 2 for short non-draw-off times. See calculation of the required buffer volume

Performance data

Calculation of the required buffer volume

In order to provide the required energy for domestic water heating, a fresh water station is generally connected to a heating water puffer tank. The volume of the heating water buffer tank is determined by the domestic hot water requirement of the installation, the storage temperature in the heating water buffer tank and the user behaviour.

VP = V x t x (Tp/Tww) x Sn

VP	Required minimum volume of the heating water buffer tank
V	Calculated peak flow of the fresh water module
t	Time for which the peak flow is required. The value can be gear towards, for example the duration of the tub filling, user information or the standard value from DIN 4708 (10 min.)
(Tp/Tww)	For the temperature spread between the heating water buffer tank and domestic water 0.5 for a high temperature spread (e.g. 90/45 °C) 0.7 for a medium temperature spread (e.g. 70/45 °C) 1 for a low temperature spread (e.g. 55/45 °C)
Sn	Safety factor for observing user behaviour 1 normal non-draw-off times 2 short non-draw-off times 3…4 very short non-draw-off times

Example calculation

VP	V	t	(Tp/Tww)	Sn
(l)	(l/min)	(min)		
1576	78.8	10.0	1.0	2.0

	Result
	Input

Pressure drop (ΔP / Q max) - domestic water side (secondary)

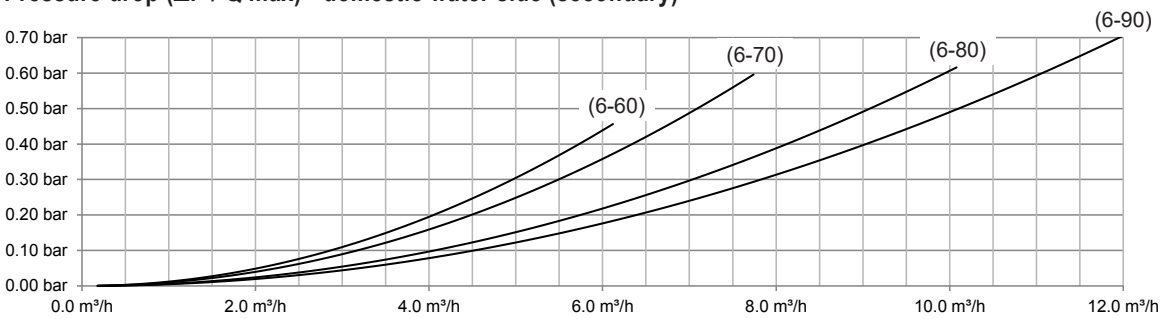

Circulating pump characteristic curves

for circulation set ¾″

Δp-v (variable)

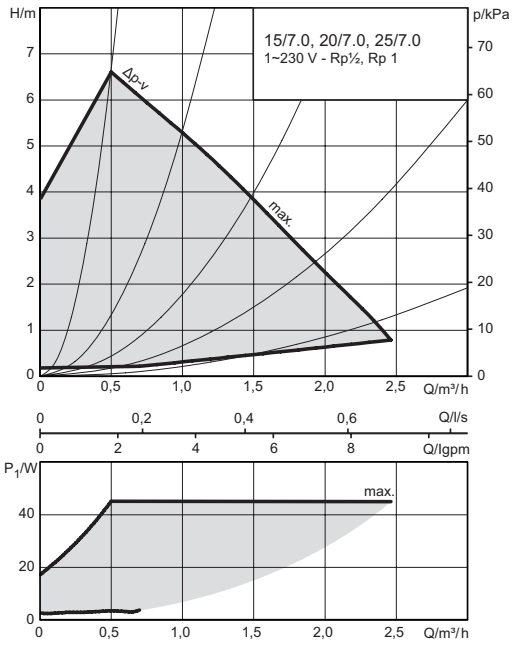

Constant speed

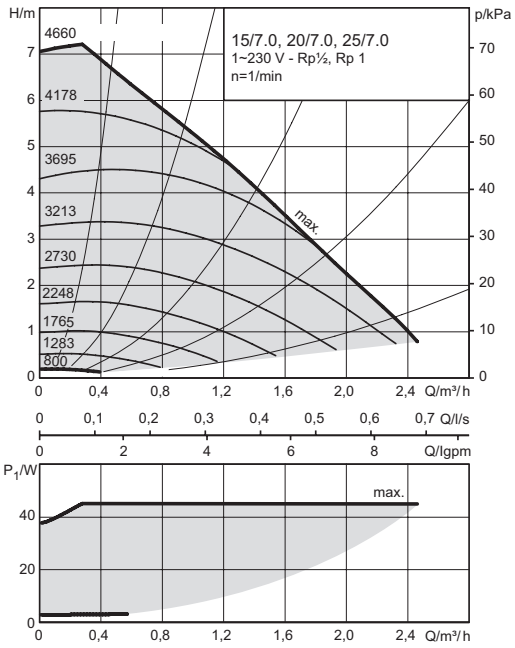

for circulation set 1″ and 1 ¼″

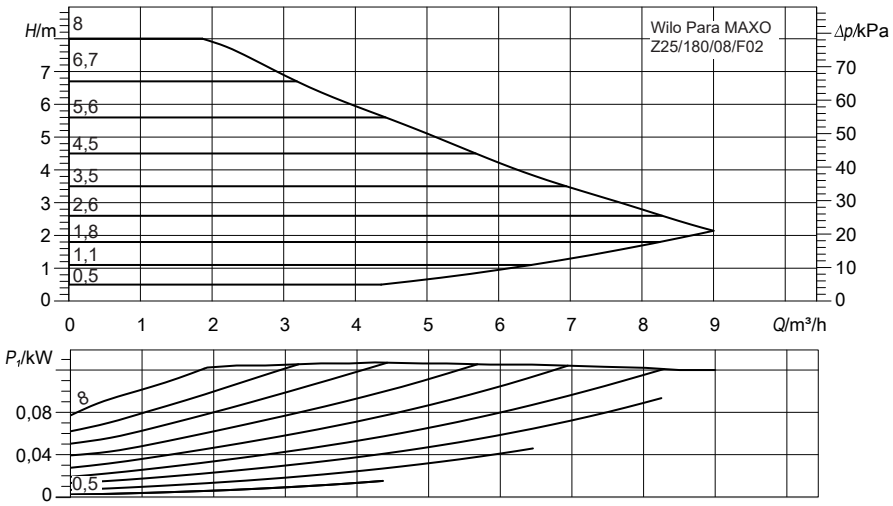

Charging module TransTherm® aqua F (6-60)

(Dimensions in mm)

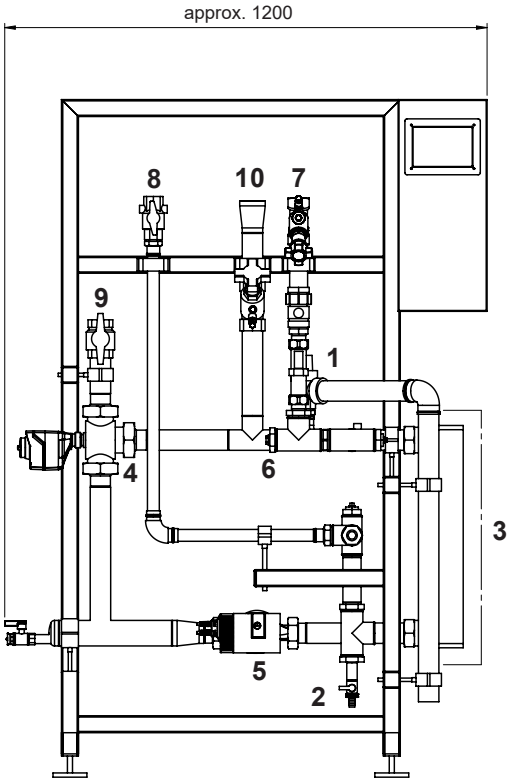

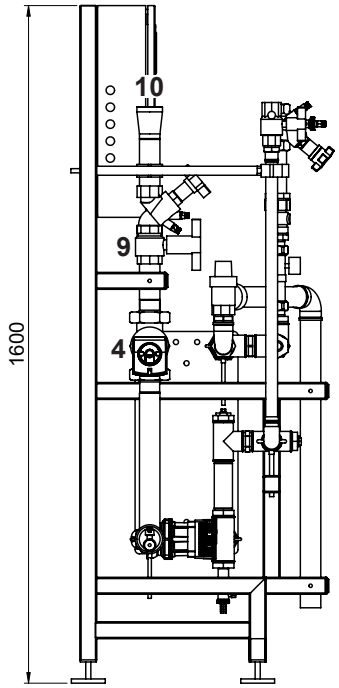

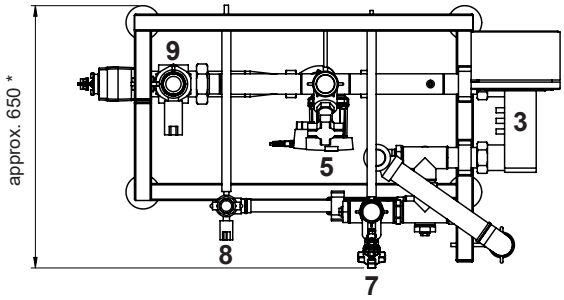

* with circulation 680

Version incl. circulation set

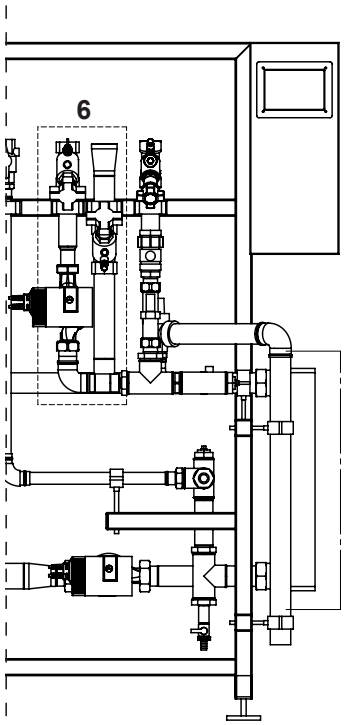

1	Safety valve Hot water 10 bar	
2	Filling/drain valve	
3	Heat exchanger	
4	Three-way valve	
5	Circulating pump	
6	Circulation	DN 32, Rp 1 ¼″ (DN 25, Rp 1″) (IT)
7	Cold water	DN 32, Rp 1 ¼″ (IT)
8	Hot water	DN 32, Rp 1 ¼″ (IT)
9	Flow heating water	DN 40, Rp 1 ½″ (IT)
10	Return heating water	DN 40, Rp 1 ½″ (IT)

TransTherm® aqua F	Weight in kg
(6-60)	123

Charging module TransTherm® aqua F (6-70)

(Dimensions in mm)

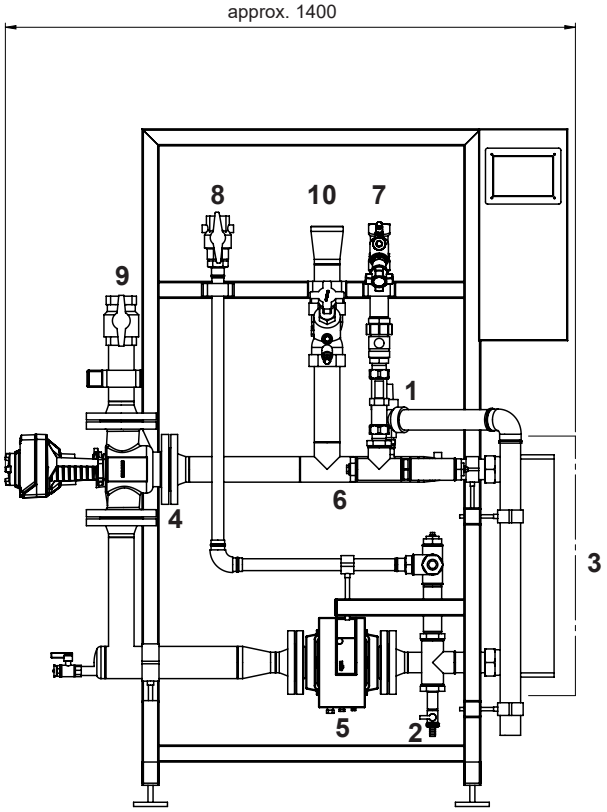

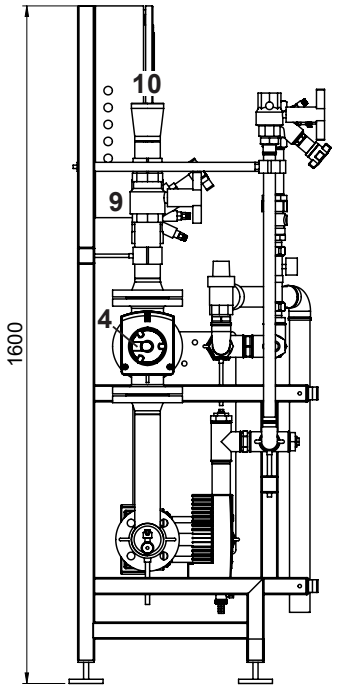

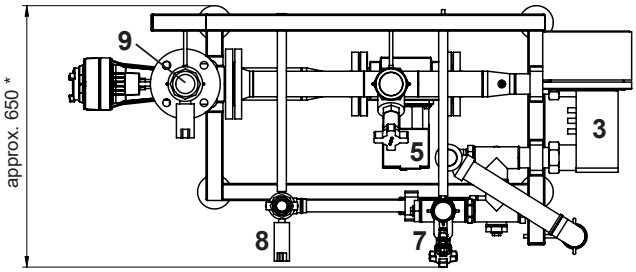

* with circulation 680

Version incl. circulation set

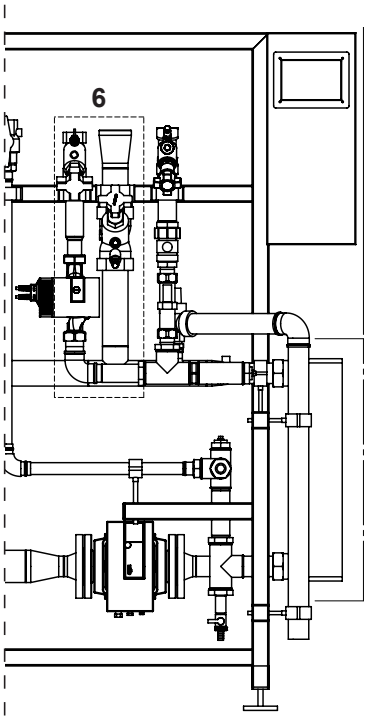

1	Safety valve Hot water 10 bar	
2	Filling/drain valve	
3	Heat exchanger	
4	Three-way valve	
5	Circulating pump	
6	Circulation	DN 32, Rp 1 ¼″ (DN 25, Rp 1″) (IT)
7	Cold water	DN 32, Rp 1 ¼″ (IT)
8	Hot water	DN 32, Rp 1 ¼″ (IT)
9	Flow heating water	DN 50, Rp 2″ (IT)
10	Return heating water	DN 50, Rp 2″ (IT)

TransTherm® aqua F	Weight in kg
(6-70)	172

Charging module TransTherm® aqua F (6-80)

(Dimensions in mm)

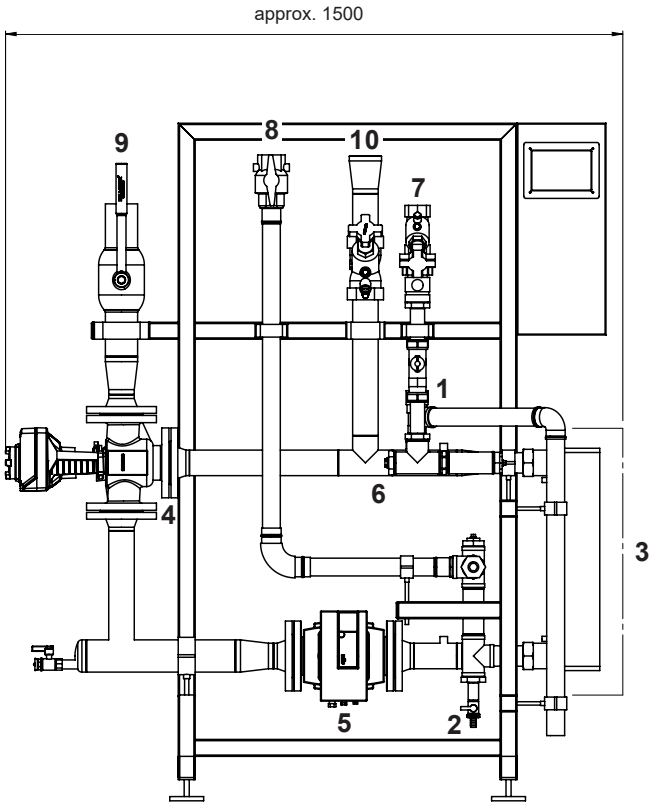

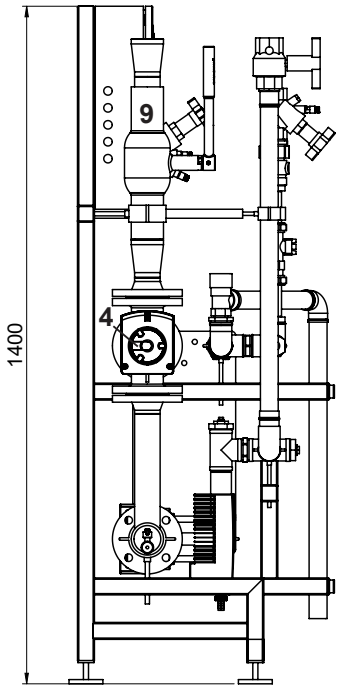

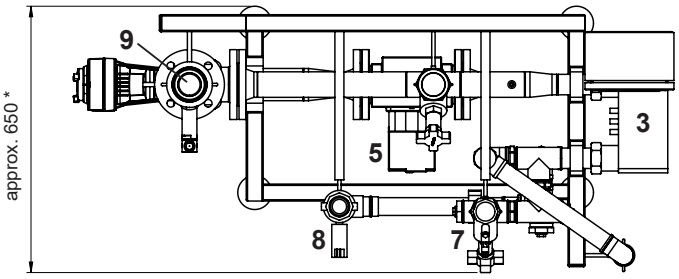

* with circulation 680

Version incl. circulation set

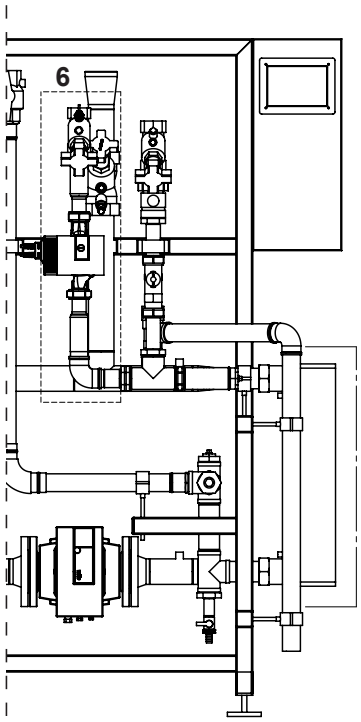

1	Safety valve Hot water 10 bar	
2	Filling/drain valve	
3	Heat exchanger	
4	Three-way valve	
5	Circulating pump	
6	Circulation	DN 32, Rp 1 ¼″ (DN 25, Rp 1″) (IT)
7	Cold water	DN 40, Rp 1 ½″ (IT)
8	Hot water	DN 40, Rp 1 ½″ (IT)
9	Flow heating water	DN 65 AE (weld-on end)
10	Return heating water	DN 65 AE (weld-on end)

TransTherm® aqua F	Weight in kg
(6-80)	202

Charging module TransTherm® aqua F (6-90)

(Dimensions in mm)

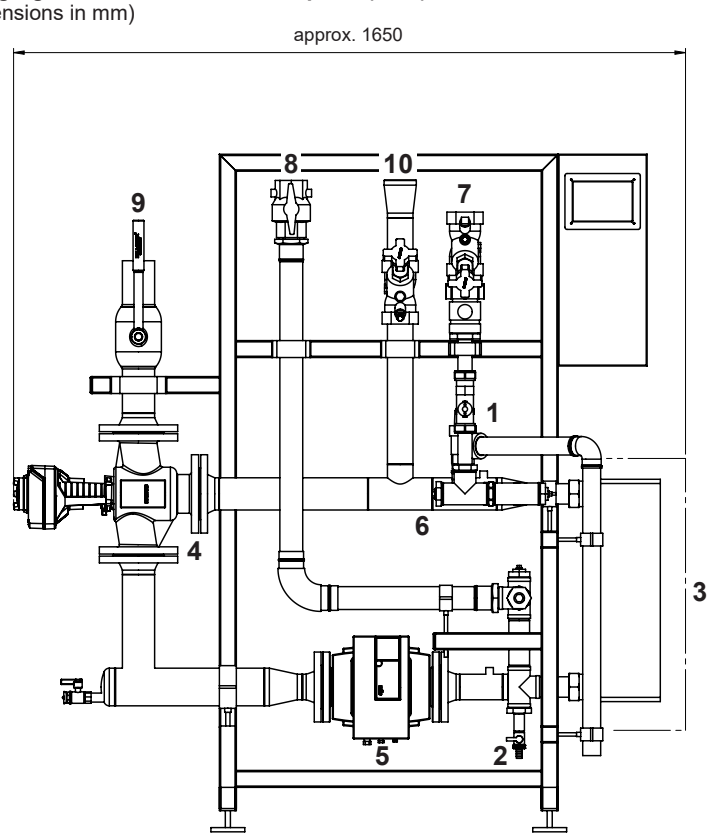

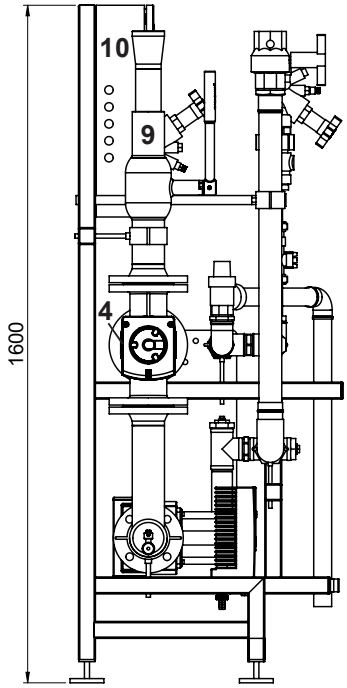

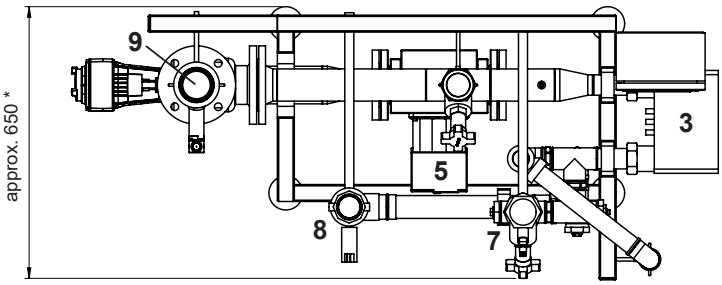

* with circulation 700

Version incl. circulation set

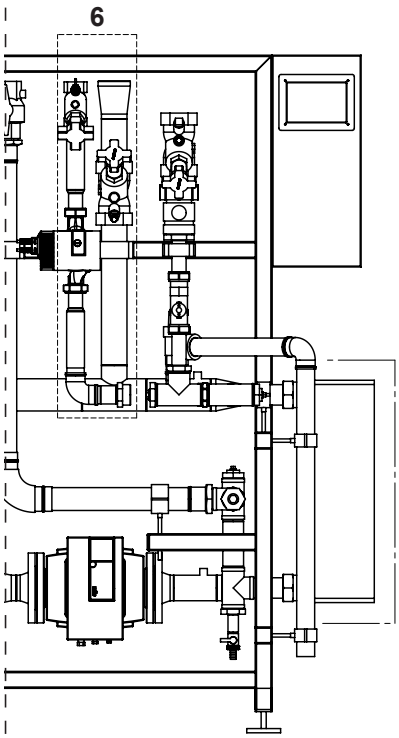

1	Safety valve Hot water 10 bar	
2	Filling/drain valve	
3	Heat exchanger	
4	Three-way valve	
5	Circulating pump	
6	Circulation	DN 32, Rp 1 ¼″ (DN 25, Rp 1″) (IT)
7	Cold water	DN 50, Rp 2″ (IT)
8	Hot water	DN 50, Rp 2″ (IT)
9	Flow heating water	DN 65 AE (weld-on end)
10	Return heating water	DN 65 AE (weld-on end)

TransTherm® aqua F	Weight in kg
(6-90)	214

Water heating

TransTherm® aqua F

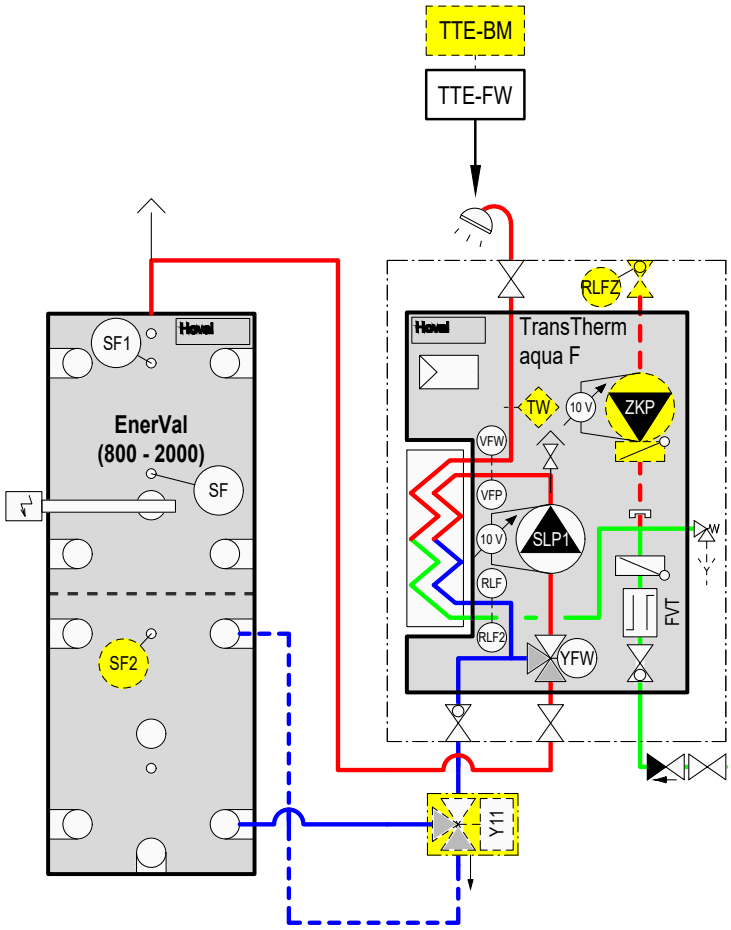

TTE-FW	Basic module district heating/fresh water
TW	Flow temperature monitor (if required)
VFP	Flow sensor primary
VFW	Flow sensor DHW
RLF	Return sensor primary
RLF2	Return sensor cold water
SF	Calorifier sensor
SF1	Calorifier sensor 1
RLFZ	Circulation sensor
SLP1	Calorifier charging pump primary
FVT	Flow rate sensor
YFW	Three-way valve with actuator
ZKP	Recirculation pump
Y11	Return switching with actuator

Option

BM	TopTronic® E control module
SF2	Calorifier sensor 2

Calorifier continuous flow system

Consisting of:
- fresh water module TransTherm® aqua FS
- buffer storage tank (option)

Fresh water module TransTherm® aqua FS

Consisting of:
Charging circuit flow:
- ball valve with thermometer handle
- 3-way valve YXG 48
- drive Siemens SAT 61 (0-10 V)
- Stratos pump
- sleeve for cable sensor M10 x 1
- sleeve for AGFW sensor

Charging circuit high temperature return:
- flow rate limiter Hydrocontrol VTR
- test port OVENTROP set 2
- three-way valve YXG 48
- drive Siemens SAT 61 (0-10 V)
- sleeve for cable sensor M10 x 1
- sleeve for AGFW sensor

Charging circuit low temperature return:
- flow rate limiter Hydrocontrol VTR
- test port OVENTROP set 2
- ball valve WESA 1533
- sleeve for cable sensor M10 x 1
- sleeve for AGFW sensor

Heat exchanger supplementary heater:
- plate heat exchanger DANFOSS

Heat exchanger preheater:
- plate heat exchanger DANFOSS

Domestic hot water DHW:
- ball valve OVENTROP Optibal TW
- bimetallic thermometer OVENTROP TW
- sampling valve OVENTROP Aquastrom P (optional)
- ball valve OVENTROP
- sleeve for AGFW sensor

Domestic hot water circulation DHWC:
- flow rate limiter Aquastrom
- sampling valve OVENTROP Aquastrom P
- measurement nozzle OVENTROP
- pump STRATOS P. Z25/1-8 RKA
- non-return valve TS73S
- sleeve for AGFW sensor

Domestic water DW:
- flow rate limiter Aquastrom C
- non-return valve ROSSWEINER
- adapter
- flow rate sensor HUBA
- ball valve OVENTROP
- sleeve for AGFW sensor
- diaphragm safety valve

Control panel control system:
- control panel casing SCHNEIDER
- control TTE-FW
- fuses
- sockets
- terminals

Stand frame:
- frame with corrosion protection coating RAL 9005
- height-adjustable and vibration-damped feet

Range
Fresh water module

TransTherm® aqua FS type	Output kW
(7-10)	50
(7-16)	90
(7-20)	130
(7-30)	175
(7-40)	220
(7-50)	275
(7-60)	358
(7-70)	453
(7-80)	569
(7-90)	717

Thermal insulation:
- thermal insulation of the heat exchanger with 30 mm EPP mouldings
- thermal insulation of the pipes with EPP mouldings. insulation thickness of 50 % according to EnEV
- deep black, similar to RAL 9005
- suitable for damp rooms
- CFC-free
- normal flammability according to DIN 4102-1 and EN 13501-1 (fuel class: B2)
- no bleaching or disintegration of the insulation under the influence of UV

Delivery
- The buffer storage tank required is not included in the scope of delivery

On site
- Electrical connection of the controller

Suitable buffer storage tanks
see separate chapter

TopTronic® E controller

TopTronic® E basic module
District heating/fresh water
- Control unit for controlling district heating systems in non-communicative networks and the corresponding consumers with integrated control functions for
  - primary valve control
  - cascade management
  - 1 heating circuit with mixer
  - 1 heating circuit without mixer
  - 1 hot water charging circuit
  - various additional functions
- Various functions for domestic hot water:
  - selection of different basic programs (week programs, eco mode, holiday, etc.)
  - various operating modes (e.g. accumulator priority or parallel mode)
  - buffer storage circuit on the primary or secondary side
  - adjustable loading criteria (e.g. adjustable loading times, undershooting the minimum nominal value, etc.)
  - adjustable switch-off criteria (e.g. achieving the set value, achieving the lower sensor set value, etc.)
  - adjustable loading block (if the loading flow temperature is too low, the setpoint temperature is not reached, differential temperature-dependent solar circuit control)
- Definable switching times for circulating pump control

- Outdoor sensor
- Immersion sensor (calorifier sensor)
- Contact sensor (flow temperature sensor)
- Complete plug set for district heating module
- Speed-controlled pumps

No further module expansions or controller modules can be installed in the control panel!

Option

TopTronic® E control module
- Simple, intuitive operating concept
- Display of the most important operating states
- Configurable start screen
- Operating mode selection
- Configurable day and week programmes
- Operation of all connected Hoval CAN bus modules
- Commissioning wizard
- Service and maintenance function
- Fault message management
- Analysis function
- Weather display (with HovalConnect option)
- Adaptation of the heating strategy based on the weather forecast (with HovalConnect option)

Notice
The TopTronic® E control module for operating the basic module district heating/fresh water must be ordered separately!

For further information about the TopTronic® E,
see “Controls”

Delivery
- Incl. thermometer, non-return valves, cut-off ball valves on the domestic water side
- All fittings required for operation, such as strainers, flow balancing and shut-off valves, non-return valves, air vent and drain valve are fitted

Caution
As a result of thermal disinfection of the domestic hot water for legionella protection, increased water temperatures (at least 65-70 °C) occur. Depending on the water quality, this may result in increased calcification at the installed fittings and heat exchangers and also brings the risk of scalding at the tapping points. Corresponding protective measures must be implemented on site.

Fresh water module

TransTherm® aqua FS

Fully assembled station with 2 plate heat exchangers for the provision of domestic hot water using the continuous flow principle and built-in Hoval TopTronic® E control.
The buffer storage tanks required for this are not included in the scope of delivery.

TransTherm® aqua FS	Output kW	Part No.
(7-10)	50	8008 017
(7-16)	90	8008 018
(7-20)	130	8008 019
(7-30)	175	8008 020
(7-40)	220	8008 021
(7-50)	275	8008 022
(7-60)	358	8008 023
(7-70)	453	8008 024
(7-80)	569	8008 025
(7-90)	717	8008 026

Version with copper-free heat exchanger

TransTherm® aqua FS

with copper-free heat exchanger

TransTherm® aqua FS	Output kW	Part No.
(7-10)	50	8008 027
(7-16)	90	8008 028
(7-20)	130	8008 029
(7-30)	175	8008 030
(7-40)	220	8008 031

	Part No.
 **TopTronic® E control module black with 4.3″ colour touchscreen** For operation of all controller modules connected to the bus system (basic, solar, buffer modules etc.) Connection to the Hoval bus system via RJ45 plug connection or via plug terminals (max. 0.75 mm²), flat design with flexible installation option Installation: - in control panel of the heat generator - in the Hoval wall casing - in the control panel front, black high-gloss cover, customer-specific configurable start screen, Display of current weather or weather forecast (only possible in combination with HovalConnect) Consisting of: - TopTronic® E control module black - Clamping device set control module - RJ45-RAST 5 CAN cable, L = 500	6043 844
 **Test valve DN 8 G ¼″** for TransTherm® aqua L, F, FS Test valve suitable for flame treatment for hygienic-microbiologic tests.	2049 861
 **Sludge separator with magnet MB3/L DN 25...DN 50** Fast and continuous removal of ferromagnetic and non-magnetic dirt and sludge particles. Sludge separation up to a particle size of 5 µm. Brass housing Max. operating pressure: 6 bar Max. flow temperature: 110 °C	

Type	Connection	Flow rate m³/h at 1 m/s flow speed	
MB3 DN 25	Rp 1″	2.0	2062 165
MBL DN 32	Rp 1¼″	3.6	2062 166
MBL DN 40	Rp 1½″	5.0	2062 167
MBL DN 50	Rp 2″	7.5	2062 168

Additional sludge separators
see “Various system components”

		Part No.
	**Temperature monitor 0…120 °C** for TransTherm® aqua L, F, FS	2048 299
	**Safety temperature monitor 70…130 °C** for TransTherm® aqua L, F, FS	2048 300
	**Safety temperature limiter 70…130 °C** for TransTherm® aqua L, F, FS	2049 619
	**Immersion sleeve G ½″ stainless steel for thermostat** for TransTherm® aqua L, F, FS Installation length = 100 mm Outer Ø: 8 mm, inner Ø: 6.5 mm	2048 285
	**Immersion sleeve G ½″ stainless steel for 2 thermostats** for TransTherm® aqua L, F, FS Installation length = 100 mm Outer Ø: 15 mm, inner Ø: 13.5 mm	2048 288

Services

Commissioning
Commissioning by works service or Hoval trained authorised serviceman/company is condition for warranty.

For commissioning and other services please contact your Hoval sales office.

Performance data

TransTherm® aqua FS (7-10 to 7-50)

Domestic water secondary	TransTherm® aqua FS		Heating water temperature flow 55 °C (6-...) (10)	(16)	(20)	(30)	(40)	(50)	60 °C (6-...) (10)	(16)	(20)	(30)	(40)	(50)
60/5 °C	T return primary	°C	-	-	-	-	-	-	-	-	-	-	-	-
	V̇ primary	**m³/h**	-	-	-	-	-	-	-	-	-	-	-	-
	Q max.	kW	-	-	-	-	-	-	-	-	-	-	-	-
	V̇ secondary	**m³/h**	-	-	-	-	-	-	-	-	-	-	-	-
60/10 °C	T return primary	°C	-	-	-	-	-	-	-	-	-	-	-	-
	V̇ primary	**m³/h**	-	-	-	-	-	-	-	-	-	-	-	-
	Q max.	kW	-	-	-	-	-	-	-	-	-	-	-	-
	V̇ secondary	**m³/h**	-	-	-	-	-	-	-	-	-	-	-	-
60/15 °C	T return primary	°C	-	-	-	-	-	-	-	-	-	-	-	-
	V̇ primary	**m³/h**	-	-	-	-	-	-	-	-	-	-	-	-
	Q max.	kW	-	-	-	-	-	-	-	-	-	-	-	-
	V̇ secondary	**m³/h**	-	-	-	-	-	-	-	-	-	-	-	-
60/20 °C	T return primary	°C	-	-	-	-	-	-	-	-	-	-	-	-
	V̇ primary	**m³/h**	-	-	-	-	-	-	-	-	-	-	-	-
	Q max.	kW	-	-	-	-	-	-	-	-	-	-	-	-
	V̇ secondary	**m³/h**	-	-	-	-	-	-	-	-	-	-	-	-
55/5 °C	T return primary	°C	-	-	-	-	-	-	30	30	30	30	30	30
	V̇ primary	**m³/h**	-	-	-	-	-	-	**1.25**	**2.04**	**2.51**	**3.71**	**4.76**	**5.66**
	Q max.	kW	-	-	-	-	-	-	43	70	86	127	163	194
	V̇ secondary	**m³/h**	-	-	-	-	-	-	**0.74**	**1.2**	**1.48**	**2.18**	**2.8**	**3.33**
55/10 °C	T return primary	°C	-	-	-	-	-	-	30	30	30	30	30	30
	V̇ primary	**m³/h**	-	-	-	-	-	-	**1.11**	**2.04**	**2.51**	**3.71**	**4.76**	**5.63**
	Q max.	kW	-	-	-	-	-	-	38	70	86	127	163	193
	V̇ secondary	**m³/h**	-	-	-	-	-	-	**0.73**	**1.34**	**1.64**	**2.43**	**3.12**	**3.69**
55/15 °C	T return primary	°C	-	-	-	-	-	-	30	30	30	30	30	30
	V̇ primary	**m³/h**	-	-	-	-	-	-	**0.76**	**1.46**	**1.95**	**3.06**	**4.23**	**5.4**
	Q max.	kW	-	-	-	-	-	-	26	50	67	105	145	185
	V̇ secondary	**m³/h**	-	-	-	-	-	-	**0.56**	**1.08**	**1.44**	**2.26**	**3.12**	**3.98**
55/20 °C	T return primary	°C	-	-	-	-	-	-	30	30	30	30	30	30
	V̇ primary	**m³/h**	-	-	-	-	-	-	**0.47**	**0.9**	**1.17**	**1.9**	**2.63**	**3.36**
	Q max.	kW	-	-	-	-	-	-	16	31	40	65	90	115
	V̇ secondary	**m³/h**	-	-	-	-	-	-	**0.39**	**0.76**	**0.99**	**1.6**	**2.22**	**2.83**
50/5 °C	T return primary	°C	30	30	30	30	30	30	30	30	30	30	30	30
	V̇ primary	**m³/h**	**1.29**	**2.03**	**2.51**	**3.67**	**4.72**	**5.66**	**1.28**	**2.04**	**2.51**	**3.71**	**4.76**	**5.63**
	Q max.	kW	37	58	72	105	135	162	44	70	86	127	163	193
	V̇ secondary	**m³/h**	**0.71**	**1.11**	**1.37**	**2**	**2.58**	**3.09**	**0.84**	**1.34**	**1.64**	**2.43**	**3.12**	**3.69**
50/10 °C	T return primary	°C	30	30	30	30	30	30	30	30	30	30	30	30
	V̇ primary	**m³/h**	**1.29**	**2.03**	**2.51**	**3.67**	**4.72**	**5.66**	**1.28**	**2.04**	**2.51**	**3.73**	**4.81**	**5.69**
	Q max.	kW	38	58	72	105	135	162	44	70	86	128	165	195
	V̇ secondary	**m³/h**	**0.82**	**1.25**	**1.77**	**2.26**	**2.9**	**3.48**	**0.95**	**1.51**	**1.85**	**2.75**	**3.55**	**4.19**
50/15 °C	T return primary	°C	30	30	30	30	30	30	30	30	30	30	30	30
	V̇ primary	**m³/h**	**1.29**	**2.03**	**2.51**	**3.67**	**4.72**	**5.66**	**1.11**	**1.95**	**2.48**	**3.76**	**4.76**	**5.69**
	Q max.	kW	37	58	72	105	135	162	38	67	85	129	163	195
	V̇ secondary	**m³/h**	**0.91**	**1.43**	**1.77**	**2.58**	**3.32**	**3.99**	**0.94**	**1.65**	**2.09**	**3.18**	**4.01**	**4.8**
50/20 °C	T return primary	°C	30	30	30	30	30	30	30	30	30	30	30	30
	V̇ primary	**m³/h**	**1.15**	**2.03**	**2.55**	**3.7**	**4.75**	**5.69**	**0.96**	**1.69**	**2.13**	**3.24**	**3.63**	**5.16**
	Q max.	kW	33	58	73	106	136	163	33	58	73	111	145	177
	V̇ secondary	**m³/h**	**0.95**	**1.67**	**2.1**	**3.05**	**3.91**	**4.69**	**0.95**	**1.67**	**2.1**	**3.19**	**4.17**	**5.09**
45/5 °C	T return primary	°C	19	18	18	18	18	17	177	16	16	16	16	15
	V̇ primary	**m³/h**	**0.86**	**1.91**	**2.9**	**2.9**	**3.8**	**4.61**	**0.86**	**1.92**	**2.91**	**2.91**	**3.82**	**4.63**
	Q max.	kW	35	80	123	123	162	199	42	95	145	145	192	235
	V̇ secondary	**m³/h**	**0.76**	**1.73**	**2.65**	**2.65**	**3.50**	**4.27**	**0.90**	**2.05**	**3.13**	**3.13**	**4.14**	**5.05**
45/10 °C	T return primary	°C	21	21	20	20	20	20	20	19	19	19	18	18
	V̇ primary	**m³/h**	**0.86**	**1.91**	**2.89**	**2.89**	**3.81**	**4.62**	**0.86**	**1.92**	**2.84**	**2.84**	**3.63**	**4.32**
	Q max.	kW	33	74	114	114	151	185	39	89	133	133	172	207
	V̇ secondary	**m³/h**	**0.81**	**1.84**	**2.81**	**2.81**	**3.74**	**4.56**	**0.97**	**2.20**	**3.29**	**3.29**	**4.25**	**5.09**
45/15 °C	T return primary	°C	24	23	23	23	23	23	23	22	21	21	21	21
	V̇ primary	**m³/h**	**0.86**	**1.91**	**2.91**	**2.91**	**3.81**	**4.62**	**0.87**	**1.8**	**2.61**	**2.61**	**3.33**	**3.98**
	Q max.	kW	30	69	106	106	139	170	37	78	115	115	148	178
	V̇ secondary	**m³/h**	**0.88**	**1.99**	**3.05**	**3.05**	**4.02**	**4.90**	**1.07**	**2.26**	**3.31**	**3.31**	**4.26**	**5.12**
45/20 °C	T return primary	°C	27	26	26	26	26	26	25	25	24	24	24	24
	V̇ primary	**m³/h**	**0.86**	**1.92**	**2.91**	**2.91**	**3.71**	**4.41**	**0.85**	**1.63**	**2.36**	**2.36**	**3.02**	**3.61**
	Q max.	kW	27	63	96	96	124	148	33	65	96	96	123	148
	V̇ secondary	**m³/h**	**0.96**	**2.18**	**3.33**	**3.33**	**4.28**	**5.13**	**1.16**	**2.27**	**3.32**	**3.32**	**4.28**	**5.14**

T return primary	°C	Temperature primary return
V̇ primary	**m³/h**	Flow rate primary
Q max.	kW	Output
V̇ secondary	**m³/h**	Flow rate secondary

The specified technical data relate to the full load of the module in each case.

Performance data

TransTherm® aqua FS (7-10 to 7-50)

Domestic water secondary	TransTherm® aqua FS		Heating water temperature flow 65 °C (6-...) (10)	(16)	(20)	(30)	(40)	(50)	70 °C (6-...) (10)	(16)	(20)	(30)	(40)	(50)
60/5 °C	T return primary	°C	30	30	30	30	30	30	30	30	30	30	30	30
	V̇ primary	**m³/h**	**1.08**	**1.88**	**2.5**	**3.73**	**4.84**	**5.77**	**1.32**	**2.09**	**2.86**	**3.76**	**4.49**	**5.72**
	Q max.	kW	43	75	100	149	193	230	60	95	133	171	209	260
	V̇ secondary	**m³/h**	**0.67**	**1.17**	**1.55**	**2.33**	**3.01**	**3.59**	**0.94**	**1.48**	**2.29**	**2.67**	**3.59**	**4.06**
60/10 °C	T return primary	°C	30	30	30	30	30	30	30	30	30	30	30	30
	V̇ primary	**m³/h**	**0.8**	**1.5**	**2.01**	**3.16**	**4.34**	**5.39**	**1.08**	**1.94**	**2.80**	**3.77**	**4.73**	**5.92**
	Q max.	kW	32	60	80	126	173	215	50	90	130	175	220	275
	V̇ secondary	**m³/h**	**0.55**	**1.03**	**1.38**	**2.17**	**2.98**	**3.7**	**0.86**	**1.54**	**2.24**	**3.01**	**3.78**	**4.73**
60/15 °C	T return primary	°C	30	30	30	30	30	30	30	30	30	30	30	30
	V̇ primary	**m³/h**	**0.55**	**1.05**	**1.38**	**2.13**	**3.08**	**3.96**	**0.97**	**1.8**	**2.37**	**3.73**	**4.84**	**5.72**
	Q max.	kW	22	42	55	85	123	158	44	82	108	170	220	260
	V̇ secondary	**m³/h**	**0.42**	**0.8**	**1.05**	**1.63**	**2.35**	**3.02**	**0.84**	**1.57**	**2.08**	**3.24**	**4.21**	**4.98**
60/20 °C	T return primary	°C	30	30	30	30	30	30	30	30	30	30	30	30
	V̇ primary	**m³/h**	**0.3**	**0.6**	**0.8**	**1.28**	**1.75**	**2.33**	**0.62**	**1.14**	**2.05**	**2.4**	**3.43**	**4.22**
	Q max.	kW	12	24	32	51	70	93	28	52	68	109	156	192
	V̇ secondary	**m³/h**	**0.26**	**0.52**	**0.69**	**1.1**	**1.51**	**2**	**0.6**	**1.12**	**1.47**	**2.36**	**3.36**	**4.14**
55/5 °C	T return primary	°C	30	30	30	30	30	30	30	30	30	30	30	30
	V̇ primary	**m³/h**	**0.8**	**1.5**	**2.01**	**3.16**	**4.34**	**5.39**	**1.08**	**2.09**	**2.53**	**3.74**	**4.84**	**5.76**
	Q max.	kW	32	60	80	126	173	215	50	95	115	170	220	262
	V̇ secondary	**m³/h**	**0.55**	**1.03**	**1.38**	**2.17**	**2.98**	**3.7**	**0.86**	**1.63**	**1.97**	**2.92**	**3.78**	**4.5**
55/10 °C	T return primary	°C	30	30	30	30	30	30	30	30	30	30	30	30
	V̇ primary	**m³/h**	**1.3**	**2.06**	**2.53**	**3.71**	**4.81**	**5.64**	**1.08**	**1.87**	**2.42**	**3.74**	**4.84**	**5.72**
	Q max.	kW	52	82	101	148	192	225	49	85	110	170	220	260
	V̇ secondary	**m³/h**	**0.99**	**1.57**	**1.93**	**2.83**	**3.67**	**4.3**	**0.94**	**1.62**	**2.1**	**3.24**	**4.21**	**4.98**
55/15 °C	T return primary	°C	30	30	30	30	30	30	30	30	30	30	30	30
	V̇ primary	**m³/h**	**0.97**	**1.65**	**2.11**	**3.71**	**4.81**	**5.64**	**1.1**	**1.88**	**2.41**	**3.74**	**4.22**	**5.1**
	Q max.	kW	44	75	96	148	192	225	44	75	96	148	192	232
	V̇ secondary	**m³/h**	**0.95**	**1.61**	**2.07**	**3.19**	**4.13**	**4.84**	**0.94**	**1.62**	**2.1**	**3.19**	**4.21**	**5**
55/20 °C	T return primary	°C	30	30	30	30	30	30	30	30	30	30	30	30
	V̇ primary	**m³/h**	**0.95**	**1.68**	**2.13**	**3.23**	**4.24**	**5.14**	**0.84**	**1.47**	**1.87**	**2.84**	**3.72**	**4.51**
	Q max.	kW	38	67	85	129	169	205	38	67	85	129	169	205
	V̇ secondary	**m³/h**	**0.94**	**1.65**	**2.09**	**3.18**	**4.16**	**5.05**	**0.94**	**1.65**	**2.09**	**3.18**	**4.16**	**5.05**
50/5 °C	T return primary	°C	30	30	30	30	30	30	30	30	30	30	30	30
	V̇ primary	**m³/h**	**1.25**	**2.06**	**2.53**	**3.71**	**4.81**	**5.64**	**1.08**	**1.87**	**2.42**	**3.56**	**4.84**	**5.72**
	Q max.	kW	50	82	101	148	192	225	49	85	110	162	220	260
	V̇ secondary	**m³/h**	**0.95**	**1.57**	**1.93**	**2.83**	**3.67**	**4.3**	**0.94**	**1.62**	**2.1**	**3.09**	**4.21**	**4.98**
50/10 °C	T return primary	°C	30	30	30	30	30	30	30	30	30	30	30	30
	V̇ primary	**m³/h**	**1.1**	**1.88**	**2.41**	**3.71**	**4.81**	**5.64**	**0.97**	**1.65**	**2.11**	**3.25**	**4.22**	**5.1**
	Q max.	kW	44	75	96	148	192	225	44	75	96	148	192	232
	V̇ secondary	**m³/h**	**0.95**	**1.61**	**2.07**	**3.19**	**4.13**	**4.84**	**0.95**	**1.61**	**2.07**	**3.19**	**4.13**	**5**
50/15 °C	T return primary	°C	30	30	30	30	30	30	30	30	30	30	30	30
	V̇ primary	**m³/h**	**0.95**	**1.68**	**2.13**	**3.23**	**4.24**	**5.14**	**0.84**	**1.47**	**1.87**	**2.84**	**3.72**	**4.51**
	Q max.	kW	38	67	85	129	169	205	38	67	85	129	169	205
	V̇ secondary	**m³/h**	**0.94**	**1.65**	**2.09**	**3.18**	**4.16**	**5.05**	**0.94**	**1.65**	**2.09**	**3.18**	**4.16**	**5.05**
50/20 °C	T return primary	°C	30	30	30	30	30	30	30	30	30	30	30	30
	V̇ primary	**m³/h**	**0.83**	**1.45**	**1.81**	**2.44**	**3.63**	**4.44**	**0.73**	**1.28**	**1.61**	**2.44**	**3.19**	**3.89**
	Q max.	kW	33	58	73	111	145	177	33	58	73	111	145	177
	V̇ secondary	**m³/h**	**0.95**	**1.67**	**2.1**	**3.19**	**4.17**	**5.09**	**0.95**	**1.67**	**2.1**	**3.19**	**4.17**	**5.09**
45/5 °C	T return primary	°C	16	15	14	14	14	14	15	13	13	13	12	12
	V̇ primary	**m³/h**	**0.87**	**1.83**	**2.64**	**2.64**	**3.38**	**4.03**	**0.84**	**1.62**	**2.35**	**2.35**	**3.01**	**3.59**
	Q max.	kW	48	104	152	152	196	236	52	104	152	152	196	236
	V̇ secondary	**m³/h**	**1.04**	**2.24**	**3.27**	**3.27**	**4.23**	**5.07**	**1.13**	**2.24**	**3.28**	**3.28**	**4.23**	**5.07**
45/10 °C	T return primary	°C	19	17	17	17	17	16	17	16	16	16	15	15
	V̇ primary	**m³/h**	**0.87**	**1.69**	**2.45**	**2.45**	**3.13**	**3.73**	**0.77**	**1.49**	**2.17**	**2.17**	**2.78**	**3.32**
	Q max.	kW	45	91	134	134	172	206	46	91	133	133	172	206
	V̇ secondary	**m³/h**	**1.13**	**2.25**	**3.30**	**3.30**	**4.24**	**5.09**	**1.13**	**2.24**	**3.29**	**3.29**	**4.24**	**5.09**
45/15 °C	T return primary	°C	21	20	20	20	20	19	20	19	19	19	19	19
	V̇ primary	**m³/h**	**0.8**	**1.55**	**2.24**	**2.24**	**2.87**	**3.43**	**0.71**	**1.36**	**1.98**	**1.98**	**2.54**	**3.03**
	Q max.	kW	39	78	115	115	148	178	40	78	114	114	148	177
	V̇ secondary	**m³/h**	**1.14**	**2.27**	**3.31**	**3.31**	**4.26**	**5.11**	**1.16**	**2.26**	**3.30**	**3.30**	**4.26**	**5.10**
45/20 °C	T return primary	°C	24	23	23	23	23	23	23	23	22	22	22	22
	V̇ primary	**m³/h**	**0.72**	**1.4**	**2.02**	**2.02**	**2.59**	**3.1**	**0.63**	**1.22**	**1.78**	**1.78**	**2.29**	**2.73**
	Q max.	kW	33	66	96	96	123	148	33	65	96	96	124	148
	V̇ secondary	**m³/h**	**1.16**	**2.29**	**3.32**	**3.32**	**4.28**	**5.13**	**1.15**	**2.27**	**3.32**	**3.32**	**4.29**	**5.13**

T return primary	°C	Temperature primary return
V̇ primary	**m³/h**	Flow rate primary
Q max.	kW	Output
V̇ secondary	**m³/h**	Flow rate secondary

The specified technical data relate to the full load of the module in each case.

Performance data

TransTherm® aqua FS (7-60 to 7-90)

Domestic water secondary	TransTherm® aqua FS		Heating water temperature flow 52 °C (60)	52 °C (70)	52 °C (80)	52 °C (90)	55 °C (60)	55 °C (70)	55 °C (80)	55 °C (90)	60 °C (60)	60 °C (70)	60 °C (80)	60 °C (90)
60/5 °C	T return primary	°C	-	-	-	-	-	-	-	-	-	-	-	-
	V̇ primary	**m³/h**	-	-	-	-	-	-	-	-	-	-	-	-
	Q max.	kW	-	-	-	-	-	-	-	-	-	-	-	-
	V̇ secondary	**m³/h**	-	-	-	-	-	-	-	-	-	-	-	-
60/10 °C	T return primary	°C	-	-	-	-	-	-	-	-	-	-	-	-
	V̇ primary	**m³/h**	-	-	-	-	-	-	-	-	-	-	-	-
	Q max.	kW	-	-	-	-	-	-	-	-	-	-	-	-
	V̇ secondary	**m³/h**	-	-	-	-	-	-	-	-	-	-	-	-
60/15 °C	T return primary	°C	-	-	-	-	-	-	-	-	-	-	-	-
	V̇ primary	**m³/h**	-	-	-	-	-	-	-	-	-	-	-	-
	Q max.	kW	-	-	-	-	-	-	-	-	-	-	-	-
	V̇ secondary	**m³/h**	-	-	-	-	-	-	-	-	-	-	-	-
60/20 °C	T return primary	°C	-	-	-	-	-	-	-	-	-	-	-	-
	V̇ primary	**m³/h**	-	-	-	-	-	-	-	-	-	-	-	-
	Q max.	kW	-	-	-	-	-	-	-	-	-	-	-	-
	V̇ secondary	**m³/h**	-	-	-	-	-	-	-	-	-	-	-	-
55/5 °C	T return primary	°C	-	-	-	-	-	-	-	-	28	28	28	27
	V̇ primary	**m³/h**	-	-	-	-	-	-	-	-	**7.27**	**10.06**	**12.62**	**15.81**
	Q max.	kW	-	-	-	-	-	-	-	-	270	370	470	600
	V̇ secondary	**m³/h**	-	-	-	-	-	-	-	-	**4.68**	**6.42**	**8.15**	**10.4**
55/10 °C	T return primary	°C	-	-	-	-	-	-	-	-	30	29	29	29
	V̇ primary	**m³/h**	-	-	-	-	-	-	-	-	**7.30**	**9.04**	**11.82**	**14.63**
	Q max.	kW	-	-	-	-	-	-	-	-	255	320	420	530
	V̇ secondary	**m³/h**	-	-	-	-	-	-	-	-	**4.91**	**6.17**	**8.09**	**10.21**
55/15 °C	T return primary	°C	-	-	-	-	-	-	-	-	30	30	30	30
	V̇ primary	**m³/h**	-	-	-	-	-	-	-	-	**5.20**	**7.23**	**9.25**	**13.01**
	Q max.	kW	-	-	-	-	-	-	-	-	180	250	320	450
	V̇ secondary	**m³/h**	-	-	-	-	-	-	-	-	**3.90**	**5.42**	**6.94**	**9.75**
55/20 °C	T return primary	°C	-	-	-	-	-	-	-	-	30	30	30	30
	V̇ primary	**m³/h**	-	-	-	-	-	-	-	-	**3.18**	**4.34**	**5.78**	**7.51**
	Q max.	kW	-	-	-	-	-	-	-	-	110	150	200	260
	V̇ secondary	**m³/h**	-	-	-	-	-	-	-	-	**2.73**	**3.72**	**4.95**	**6.44**
50/5 °C	T return primary	°C	-	-	-	-	25	25	25	24	22	22	21	21
	V̇ primary	**m³/h**	-	-	-	-	**7.32**	**8.93**	**11.59**	**14.69**	**7.17**	**9.14**	**11.65**	**13.93**
	Q max.	kW	-	-	-	-	250	310	405	520	315	405	520	630
	V̇ secondary	**m³/h**	-	-	-	-	**4.82**	**5.97**	**7.80**	**10.02**	**6.07**	**7.80**	**10.02**	**12.14**
50/10 °C	T return primary	°C	-	-	-	-	27	27	27	26	24	24	24	23
	V̇ primary	**m³/h**	-	-	-	-	**7.17**	**8.95**	**11.64**	**14.45**	**6.78**	**8.62**	**11.52**	**13.16**
	Q max.	kW	-	-	-	-	230	290	380	480	280	360	485	560
	V̇ secondary	**m³/h**	-	-	-	-	**4.99**	**6.29**	**8.24**	**10.4**	**6.07**	**7.80**	**10.51**	**12.14**
50/15 °C	T return primary	°C	-	-	-	-	29	29	29	28	26	26	26	26
	V̇ primary	**m³/h**	-	-	-	-	**7.25**	**9.24**	**11.63**	**14.5**	**6.31**	**8.10**	**10.97**	**12.35**
	Q max.	kW	-	-	-	-	215	275	350	445	245	315	430	490
	V̇ secondary	**m³/h**	-	-	-	-	**5.33**	**6.81**	**8.67**	**11.02**	**6.07**	**7.80**	**10.65**	**12.14**
50/20 °C	T return primary	°C	-	-	-	-	30	30	30	30	30	29	29	29
	V̇ primary	**m³/h**	-	-	-	-	**5.03**	**6.59**	**9.02**	**11.96**	**6.00**	**7.6**	**10.35**	**11.6**
	Q max.	kW	-	-	-	-	145	190	260	345	210	270	370	420
	V̇ secondary	**m³/h**	-	-	-	-	**4.20**	**5.49**	**7.51**	**9.97**	**6.07**	**7.80**	**10.69**	**12.14**
45/5 °C	T return primary	°C	21	21	21	20	20	19	19	19	18	18	18	17
	V̇ primary	**m³/h**	**7.20**	**8.95**	**11.53**	**14.54**	**6.90**	**8.77**	**11.62**	**13.4**	**5.77**	**7.36**	**10.00**	**11.26**
	Q max.	kW	255	320	415	530	280	360	480	560	280	360	490	560
	V̇ secondary	**m³/h**	**5.53**	**6.94**	**9.00**	**11.50**	**6.07**	**7.80**	**10.4**	**12.14**	**6.07**	**7.80**	**10.62**	**12.14**
45/10 °C	T return primary	°C	23	23	23	23	22	22	22	21	20	20	20	19
	V̇ primary	**m³/h**	**7.12**	**9.21**	**11.51**	**14.45**	**6.44**	**8.23**	**11.13**	**12.57**	**5.36**	**6.86**	**9.27**	**7.24**
	Q max.	kW	235	305	385	490	245	315	430	490	245	315	430	490
	V̇ secondary	**m³/h**	**5.82**	**7.56**	**9.54**	**12.14**	**6.07**	**7.80**	**10.65**	**12.14**	**6.07**	**7.80**	**10.65**	**12.14**
45/15 °C	T return primary	°C	25	25	25	25	25	24	24	24	23	22	22	22
	V̇ primary	**m³/h**	**6.10**	**8.03**	**10.67**	**13.49**	**6.01**	**7.63**	**10.38**	**11.63**	**4.88**	**6.23**	**8.51**	**9.53**
	Q max.	kW	190	250	335	420	210	270	370	420	210	270	370	420
	V̇ secondary	**m³/h**	**5.49**	**7.23**	**9.68**	**12.14**	**6.07**	**7.80**	**10.69**	**12.14**	**6.07**	**7.80**	**10.69**	**12.14**
45/20 °C	T return primary	°C	25	25	25	25	27	27	27	27	25	25	25	25
	V̇ primary	**m³/h**	**2.73**	**3.53**	**4.66**	**6.42**	**5.46**	**6.97**	**9.57**	**10.65**	**4.37**	**5.59**	**7.68**	**8.57**
	Q max.	kW	85	110	145	200	175	225	310	350	175	225	310	350
	V̇ secondary	**m³/h**	**2.95**	**3.82**	**5.03**	**6.94**	**6.07**	**7.80**	**10.75**	**12.14**	**6.07**	**7.80**	**10.75**	**12.14**

T return primary	°C	Temperature primary return
V̇ primary	**m³/h**	Flow rate primary
Q max.	kW	Output
V̇ secondary	**m³/h**	Flow rate secondary

The specified technical data relate to the full load of the module in each case.

Performance data

TransTherm® aqua FS (7-60 to 7-90)

Domestic water secondary	TransTherm® aqua FS		Heating water temperature flow 65 °C (60)	65 °C (70)	65 °C (80)	65 °C (90)	70 °C (60)	70 °C (70)	70 °C (80)	70 °C (90)
60/5 °C	T return primary	°C	30	30	30	29	26	26	25	25
	V̇ primary	**m³/h**	**7.15**	**9.17**	**11.72**	**14.69**	**7.42**	**9.40**	**11.80**	**14.64**
	Q max.	kW	290	370	480	610	375	480	549	760
	V̇ secondary	**m³/h**	**4.57**	**5.83**	**7.57**	**9.62**	**5.91**	**7.57**	**9.44**	**11.98**
60/10 °C	T return primary	°C	30	30	30	30	28	28	28	27
	V̇ primary	**m³/h**	**5.45**	**6.94**	**9.41**	**12.88**	**7.23**	**9.29**	**12.23**	**15.42**
	Q max.	kW	220	280	380	520	358	453	569	717
	V̇ secondary	**m³/h**	**3.82**	**4.86**	**6.59**	**9.02**	**6.16**	**7.80**	**9.79**	**12.14**
60/15 °C	T return primary	°C	30	30	30	30	30	30	30	30
	V̇ primary	**m³/h**	**3.72**	**4.83**	**6.44**	**8.67**	**6.72**	**8.78**	**11.73**	**13.49**
	Q max.	kW	150	195	260	350	310	405	540	630
	V̇ secondary	**m³/h**	**2.89**	**3.76**	**5.01**	**6.74**	**5.97**	**7.80**	**10.4**	**12.14**
60/20 °C	T return primary	°C	30	30	30	30	30	30	30	30
	V̇ primary	**m³/h**	**2.11**	**2.85**	**3.72**	**4.95**	**4.34**	**5.64**	**7.37**	**9.97**
	Q max.	kW	85	115	150	200	200	260	340	460
	V̇ secondary	**m³/h**	**1.84**	**2.49**	**3.25**	**4.34**	**4.34**	**5.64**	**7.37**	**9.97**
55/5 °C	T return primary	°C	24	24	23	23	22	21	21	21
	V̇ primary	**m³/h**	**7.42**	**9.24**	**11.64**	**14.38**	**6.30**	**8.03**	**10.99**	**12.26**
	Q max.	kW	350	440	560	700	350	450	620	700
	V̇ secondary	**m³/h**	**6.07**	**7.63**	**9.71**	**12.14**	**6.07**	**7.80**	**10.75**	**12.14**
55/10 °C	T return primary	°C	26	26	26	25	24	24	24	23
	V̇ primary	**m³/h**	**7.06**	**8.96**	**11.66**	**13.66**	**5.96**	**7.6**	**10.25**	**11.6**
	Q max.	kW	315	405	530	630	315	405	550	630
	V̇ secondary	**m³/h**	**6.07**	**7.80**	**10.21**	**12.14**	**6.07**	**7.80**	**10.6**	**12.14**
55/15 °C	T return primary	°C	29	28	28	27	27	26	26	26
	V̇ primary	**m³/h**	**6.67**	**8.48**	**11.48**	**12.91**	**5.62**	**7.16**	**9.70**	**10.96**
	Q max.	kW	280	360	490	560	280	360	490	560
	V̇ secondary	**m³/h**	**6.07**	**7.80**	**10.62**	**12.14**	**6.07**	**7.80**	**10.62**	**12.14**
55/20 °C	T return primary	°C	30	30	30	30	29	29	29	28
	V̇ primary	**m³/h**	**5.95**	**7.80**	**10.4**	**12.14**	**5.13**	**6.64**	**9.01**	**10.16**
	Q max.	kW	240	315	420	490	245	315	430	490
	V̇ secondary	**m³/h**	**5.95**	**7.80**	**10.4**	**12.14**	**6.07**	**7.80**	**10.65**	**12.14**
50/5 °C	T return primary	°C	20	20	19	19	18	18	17	17
	V̇ primary	**m³/h**	**6.06**	**7.72**	**10.43**	**11.77**	**5.30**	**6.74**	**9.05**	**10.27**
	Q max.	kW	315	405	550	630	315	405	550	630
	V̇ secondary	**m³/h**	**6.07**	**7.80**	**10.6**	**12.14**	**6.07**	**7.80**	**10.6**	**12.14**
50/10 °C	T return primary	°C	22	22	22	21	21	20	20	19
	V̇ primary	**m³/h**	**5.69**	**7.28**	**9.81**	**11.08**	**4.90**	**6.24**	**8.46**	**9.57**
	Q max.	kW	280	360	490	560	280	360	490	560
	V̇ secondary	**m³/h**	**6.07**	**7.80**	**10.62**	**12.14**	**6.07**	**7.80**	**10.62**	**12.14**
50/15 °C	T return primary	°C	25	25	24	24	23	23	22	22
	V̇ primary	**m³/h**	**5.30**	**6.74**	**9.14**	**10.29**	**4.52**	**5.76**	**7.82**	**8.83**
	Q max.	kW	245	315	430	490	245	315	430	490
	V̇ secondary	**m³/h**	**6.07**	**7.80**	**10.65**	**12.14**	**6.07**	**7.80**	**10.65**	**12.14**
50/20 °C	T return primary	°C	27	26	27	26	26	26	25	25
	V̇ primary	**m³/h**	**4.84**	**6.00**	**8.38**	**9.43**	**4.12**	**5.26**	**7.16**	**8.07**
	Q max.	kW	210	270	370	420	210	270	370	420
	V̇ secondary	**m³/h**	**6.07**	**7.80**	**10.69**	**12.14**	**6.07**	**7.80**	**10.69**	**12.14**
45/5 °C	T return primary	°C	16	16	16	15	15	14	14	13
	V̇ primary	**m³/h**	**4.99**	**6.34**	**8.58**	**9.69**	**4.39**	**5.59**	**7.59**	**8.58**
	Q max.	kW	280	360	490	560	280	360	490	560
	V̇ secondary	**m³/h**	**6.07**	**7.80**	**10.62**	**12.14**	**6.07**	**7.80**	**10.62**	**12.14**
45/10 °C	T return primary	°C	19	18	18	18	17	17	17	16
	V̇ primary	**m³/h**	**4.57**	**5.85**	**7.92**	**8.94**	**4.02**	**5.13**	**6.98**	**7.90**
	Q max.	kW	245	315	430	490	245	315	430	490
	V̇ secondary	**m³/h**	**6.07**	**7.80**	**10.65**	**12.14**	**6.07**	**7.80**	**10.65**	**12.14**
45/15 °C	T return primary	°C	21	21	21	20	20	20	20	19
	V̇ primary	**m³/h**	**4.15**	**5.30**	**7.24**	**8.15**	**3.64**	**4.66**	**6.37**	**7.18**
	Q max.	kW	210	270	370	420	210	270	370	420
	V̇ secondary	**m³/h**	**6.07**	**7.80**	**10.69**	**12.14**	**6.07**	**7.80**	**10.69**	**12.14**
45/20 °C	T return primary	°C	24	24	24	24	23	23	23	23
	V̇ primary	**m³/h**	**3.71**	**4.75**	**6.51**	**7.31**	**3.24**	**4.15**	**5.71**	**6.42**
	Q max.	kW	175	225	310	350	175	225	310	350
	V̇ secondary	**m³/h**	**6.07**	**7.80**	**10.75**	**12.14**	**6.07**	**7.80**	**10.75**	**12.14**

T return primary	°C	Temperature primary return
V̇ primary	**m³/h**	Flow rate primary
Q max.	kW	Output
V̇ secondary	**m³/h**	Flow rate secondary

The specified technical data relate to the full load of the module in each case.

Performance data

TransTherm® aqua FS

Residential units standard apartment according to DIN 4708	Peak heat demand standard apartment according to DIN 4708 with preparation 10 min	Sum flow rate domestic hot water calcu-lation flow rate according to DIN 4708	Simultaneity factor according to DIN 4708	Peak flow rate (DHW)	Peak flow rate (DHW)	Peak flow rate (DHW)	Peak output (DHW)	Peak flow rate TransTherm® aqua FS (DHW)	Peak flow rate TransTherm® aqua FS (DHW)	Peak flow rate TransTherm® aqua FS (DHW)	DHW caloriffer output TransTherm® aqua FS	TransTherm® aqua FS	Required hot water volume at 70/30 °C (40 K)	Required hot water buffer storage tank volume at 70/30 °C (40 K)	Hot water buffer storage tank 2 EnerVal	Required recharging capacity	Required recharging capacity	Required recharging capacity
N	Prepara-tion	∑ VR at DHW 60 °C	g	V̇s at DHW 60 °C	V̇s at DHW 60 °C	V̇s at DHW 60 °C		V̇s at DHW 60 °C	V̇s at DHW 60 °C	V̇s at DHW 60 °C	Q at HT 70/30 °C DHW 10/60 °C	Type			Type	Time: 20 min 70/30 °C (40 K)	Time: 30 min 70/30 °C (40 K)	Time: 60 min 70/30 °C (40 K)
	[Wh]	[l/s]		[l/s]	[l/min]	[m³/h]	[kW]	[l/s]	[l/min]	[m³/h]	[kW]		[m³]	[m³]		[kW]	[kW]	[kW]
1	5820	0.17	1.00	0.17	10.01	0.60	35	0.24	14.3	0.86	50	(7-10)	0.13	0.16	(200)	23	15	8
2	11640	0.33	0.680	0.23	13.61	0.82	47	0.24	14.3	0.86	50	(7-10)	0.17	0.22	(200)	31	21	10
3	17460	0.50	0.544	0.27	16.33	0.98	57	0.43	25.8	1.55	90	(7-16)	0.20	0.27	(200)	37	25	12
4	23280	0.67	0.466	0.31	18.66	1.12	65	0.43	25.8	1.55	90	(7-16)	0.23	0.30	(200)	42	28	14
5	29100	0.83	0.415	0.35	20.77	1.25	72	0.43	25.8	1.55	90	(7-16)	0.26	0.34	(200)	47	31	16
6	34920	1.00	0.377	0.38	22.64	1.36	79	0.43	25.8	1.55	90	(7-16)	0.28	0.37	(200)	51	34	17
7	40740	1.17	0.349	0.41	24.45	1.47	85	0.43	25.8	1.55	90	(7-16)	0.31	0.40	(300)	55	37	18
8	46560	1.33	0.349	0.47	27.94	1.68	97	0.62	37.3	2.24	130	(7-20)	0.35	0.45	(300)	63	42	21
9	52380	1.50	0.308	0.46	27.74	1.66	97	0.62	37.3	2.24	130	(7-20)	0.35	0.45	(300)	63	42	21
10	58200	1.67	0.292	0.49	29.23	1.75	102	0.62	37.3	2.24	130	(7-20)	0.37	0.47	(300)	66	44	22
11	64020	1.83	0.279	0.51	30.72	1.84	107	0.62	37.3	2.24	130	(7-20)	0.38	0.50	(300)	70	46	23
12	69840	2.00	0.268	0.54	32.19	1.93	112	0.62	37.3	2.24	130	(7-20)	0.40	0.52	(500)	73	49	24
13	75660	2.17	0.258	0.56	33.57	2.01	117	0.62	37.3	2.24	130	(7-20)	0.42	0.55	(500)	76	51	25
14	81480	2.34	0.249	0.58	34.89	2.09	122	0.62	37.3	2.24	130	(7-20)	0.44	0.57	(500)	79	53	26
15	87300	2.50	0.242	0.61	36.33	2.18	127	0.62	37.3	2.24	130	(7-20)	0.45	0.59	(500)	82	55	27
16	93120	2.67	0.235	0.63	37.63	2.26	131	0.62	37.3	2.24	130	(7-20)	0.47	0.61	(500)	85	57	28
17	98940	2.84	0.228	0.65	38.79	2.33	135	0.84	50.2	3.01	175	(7-30)	0.49	0.63	(500)	88	59	29
18	104760	3.00	0.223	0.67	40.17	2.41	140	0.84	50.2	3.01	175	(7-30)	0.50	0.65	(500)	91	61	30
19	110580	3.17	0.217	0.69	41.27	2.48	144	0.84	50.2	3.01	175	(7-30)	0.52	0.67	(500)	94	62	31
20	116400	3.34	0.212	0.71	42.44	2.55	148	0.84	50.2	3.01	175	(7-30)	0.53	0.69	(500)	96	64	32
21	122220	3.50	0.208	0.73	43.72	2.62	153	0.84	50.2	3.01	175	(7-30)	0.55	0.71	(500)	99	66	33
22	128040	3.67	0.204	0.75	44.92	2.70	157	0.84	50.2	3.01	175	(7-30)	0.56	0.73	(500)	102	68	34
23	133860	3.84	0.200	0.77	46.04	2.76	161	0.84	50.2	3.01	175	(7-30)	0.58	0.75	(500)	104	70	35
24	139680	4.00	0.196	0.78	47.08	2.82	164	0.84	50.2	3.01	175	(7-30)	0.59	0.77	(500)	107	71	36
25	145500	4.17	0.193	0.80	48.29	2.90	168	0.84	50.2	3.01	175	(7-30)	0.60	0.78	(500)	110	73	37
26	151320	4.34	0.190	0.82	49.44	2.97	173	0.84	50.2	3.01	175	(7-30)	0.62	0.80	(500)	112	75	37
27	157140	4.50	0.187	0.84	50.53	3.03	176	0.84	50.2	3.01	175	(7-30)	0.63	0.82	(500)	115	76	38
28	162960	4.67	0.184	0.86	51.56	3.09	180	0.84	50.2	3.01	175	(7-30)	0.64	0.84	(500)	117	78	39
29	168780	4.84	0.181	0.88	52.54	3.15	183	1.05	63.1	3.78	220	(7-40)	0.66	0.85	(800)	119	79	40
30	174600	5.00	0.179	0.90	53.75	3.22	188	1.05	63.1	3.78	220	(7-40)	0.67	0.87	(800)	122	81	41
31	180420	5.17	0.176	0.91	54.61	3.28	191	1.05	63.1	3.78	220	(7-40)	0.68	0.89	(800)	124	83	41
32	186240	5.34	0.174	0.93	55.73	3.34	194	1.05	63.1	3.78	220	(7-40)	0.70	0.91	(800)	126	84	42
33	192060	5.50	0.172	0.95	56.81	3.41	198	1.05	63.1	3.78	220	(7-40)	0.71	0.92	(800)	129	86	43
34	197880	5.67	0.170	0.96	57.85	3.47	202	1.05	63.1	3.78	220	(7-40)	0.72	0.94	(800)	131	87	44
35	203700	5.84	0.168	0.98	58.85	3.53	205	1.05	63.1	3.78	220	(7-40)	0.74	0.96	(800)	133	89	44
36	209520	6.01	0.166	1.00	59.81	3.59	209	1.05	63.1	3.78	220	(7-40)	0.75	0.97	(800)	136	90	45
37	215340	6.17	0.164	1.01	60.73	3.64	212	1.05	63.1	3.78	220	(7-40)	0.76	0.99	(800)	138	92	46
38	221160	6.34	0.163	1.03	61.99	3.72	216	1.05	63.1	3.78	220	(7-40)	0.78	1.01	(800)	141	94	47
39	226980	6.51	0.161	1.05	62.84	3.77	219	1.05	63.1	3.78	220	(7-40)	0.79	1.02	(800)	143	95	48
40	232800	6.67	0.159	1.06	63.65	3.82	222	1.05	63.1	3.78	220	(7-40)	0.80	1.03	(800)	144	96	48
41	238620	6.84	0.158	1.08	64.84	3.89	226	1.31	78.8	4.73	275	(7-50)	0.81	1.05	(1000)	147	98	49
42	244440	7.01	0.156	1.09	65.58	3.93	229	1.31	78.8	4.73	275	(7-50)	0.82	1.07	(1000)	149	99	50
43	250260	7.17	0.155	1.11	66.71	4.00	233	1.31	78.8	4.73	275	(7-50)	0.83	1.08	(1000)	151	101	50
44	256080	7.34	0.154	1.13	67.82	4.07	237	1.31	78.8	4.73	275	(7-50)	0.85	1.10	(1000)	154	103	51
45	261900	7.51	0.152	1.14	68.46	4.11	239	1.31	78.8	4.73	275	(7-50)	0.86	1.11	(1000)	155	104	52
46	267720	7.67	0.151	1.16	69.52	4.17	243	1.31	78.8	4.73	275	(7-50)	0.87	1.13	(1000)	158	105	53
47	273540	7.84	0.150	1.18	70.56	4.23	246	1.31	78.8	4.73	275	(7-50)	0.88	1.15	(1000)	160	107	53
48	279360	8.01	0.149	1.19	71.58	4.29	250	1.31	78.8	4.73	275	(7-50)	0.89	1.16	(1000)	162	108	54
49	285180	8.17	0.148	1.21	72.58	4.35	253	1.31	78.8	4.73	275	(7-50)	0.91	1.18	(1000)	165	110	55
50	291000	8.34	0.146	1.22	73.06	4.38	255	1.31	78.8	4.73	275	(7-50)	0.91	1.19	(1000)	166	110	55
51	296820	8.51	0.145	1.23	74.01	4.44	258	1.31	78.8	4.73	275	(7-50)	0.93	1.20	(1000)	168	112	56
52	302640	8.67	0.144	1.25	74.94	4.50	261	1.31	78.8	4.73	275	(7-50)	0.94	1.22	(1000)	170	113	57
53	308460	8.84	0.143	1.26	75.86	4.55	265	1.31	78.8	4.73	275	(7-50)	0.95	1.23	(1000)	172	115	57
54	314280	9.01	0.142	1.28	76.75	4.60	268	1.31	78.8	4.73	275	(7-50)	0.96	1.25	(1000)	174	116	58
55	320100	9.17	0.141	1.29	77.62	4.66	271	1.31	78.8	4.73	275	(7-50)	0.97	1.26	(1000)	176	117	59

Residential units standard apartment according to DIN 4708	Peak heat demand standard apartment according to DIN 4708 with preparation 10 min	Sum flow rate domestic hot water calcu-lation flow rate according to DIN 4708	Simultaneity factor according to DIN 4708	Peak flow rate (DHW)	Peak flow rate (DHW)	Peak flow rate (DHW)	Peak output (DHW)	Peak flow rate TransTherm® aqua FS (DHW)	Peak flow rate TransTherm® aqua FS (DHW)	Peak flow rate TransTherm® aqua FS (DHW)	DHW calorifier output TransTherm® aqua FS	TransTherm® aqua FS	Required hot water volume at 70/30 °C (40 K)	Required hot water buffer storage tank volume at 70/30 °C (40 K)	Hot water buffer storage tank 2 EnerVal	Required recharging capacity	Required recharging capacity	Required recharging capacity
N	Prepara-tion	∑ VR at DHW 60 °C	g	$\dot{V}s$ at DHW 60 °C	$\dot{V}s$ at DHW 60 °C	$\dot{V}s$ at DHW 60 °C		$\dot{V}s$ at DHW 60 °C	$\dot{V}s$ at DHW 60 °C	$\dot{V}s$ at DHW 60 °C	Q at HT 70/30 °C DHW 10/60 °C	Type			Type	Time: 20 min 70/30 °C (40 K)	Time: 30 min 70/30 °C (40 K)	Time: 60 min 70/30 °C (40 K)
	[Wh]	[l/s]		[l/s]	[l/min]	[m³/h]	[kW]	[l/s]	[l/min]	[m³/h]	[kW]		[m³]	[m³]		[kW]	[kW]	[kW]
56	325920	9.34	0.140	1.31	78.47	4.71	274	1.31	78.8	4.73	275	(7-50)	0.98	1.28	(1000)	178	119	59
57	331740	9.51	0.140	1.33	79.87	4.79	279	1.31	78.8	4.73	275	(7-50)	1.00	1.30	(1000)	181	121	60
58	337560	9.67	0.139	1.34	80.69	4.84	282	1.71	102.6	6.16	358	(7-60)	1.01	1.31	(1000)	183	122	61
59	343380	9.84	0.138	1.36	81.49	4.89	284	1.71	102.6	6.16	358	(7-60)	1.02	1.32	(1000)	185	123	62
60	349200	10.01	0.137	1.37	82.27	4.94	287	1.71	102.6	6.16	358	(7-60)	1.03	1.34	(1000)	187	124	62
61	355020	10.18	0.136	1.38	83.03	4.98	290	1.71	102.6	6.16	358	(7-60)	1.04	1.35	(1000)	188	126	63
62	360840	10.34	0.135	1.40	83.77	5.03	292	1.71	102.6	6.16	358	(7-60)	1.05	1.36	(1000)	190	127	63
63	366660	10.51	0.135	1.42	85.12	5.11	297	1.71	102.6	6.16	358	(7-60)	1.06	1.38	(1000)	193	129	64
64	372480	10.68	0.134	1.43	85.83	5.15	299	1.71	102.6	6.16	358	(7-60)	1.07	1.40	(1000)	195	130	65
65	378300	10.84	0.133	1.44	86.52	5.19	302	1.71	102.6	6.16	358	(7-60)	1.08	1.41	(1000)	196	131	65
66	384120	11.01	0.132	1.45	87.19	5.23	304	1.71	102.6	6.16	358	(7-60)	1.09	1.42	(1000)	198	132	66
67	389940	11.18	0.132	1.48	88.52	5.31	309	1.71	102.6	6.16	358	(7-60)	1.11	1.44	(1000)	201	134	67
68	395760	11.34	0.131	1.49	89.16	5.35	311	1.71	102.6	6.16	358	(7-60)	1.11	1.45	(1000)	202	135	67
69	401580	11.51	0.130	1.50	89.78	5.39	313	1.71	102.6	6.16	358	(7-60)	1.12	1.46	(1000)	204	136	68
70	407400	11.68	0.130	1.52	91.08	5.46	318	1.71	102.6	6.16	358	(7-60)	1.14	1.48	(1000)	207	138	69
71	413220	11.84	0.129	1.53	91.67	5.50	320	1.71	102.6	6.16	358	(7-60)	1.15	1.49	(1000)	208	139	69
72	419040	12.01	0.128	1.54	92.24	5.53	322	1.71	102.6	6.16	358	(7-60)	1.15	1.50	(1500)	209	139	70
73	424860	12.18	0.128	1.56	93.52	5.61	326	1.71	102.6	6.16	358	(7-60)	1.17	1.52	(1500)	212	141	71
74	430680	12.34	0.127	1.57	94.06	5.64	328	1.71	102.6	6.16	358	(7-60)	1.18	1.53	(1500)	213	142	71
75	436500	12.51	0.127	1.59	95.33	5.72	333	1.71	102.6	6.16	358	(7-60)	1.19	1.55	(1500)	216	144	72
76	442320	12.68	0.126	1.60	95.84	5.75	334	1.71	102.6	6.16	358	(7-60)	1.20	1.56	(1500)	217	145	72
77	448140	12.84	0.126	1.62	97.10	5.83	339	1.71	102.6	6.16	358	(7-60)	1.21	1.58	(1500)	220	147	73
78	453960	13.01	0.125	1.63	97.58	5.86	340	1.71	102.6	6.16	358	(7-60)	1.22	1.59	(1500)	221	148	74
79	459780	13.18	0.124	1.63	98.04	5.88	342	1.71	102.6	6.16	358	(7-60)	1.23	1.59	(1500)	222	148	74
80	465600	13.34	0.124	1.65	99.29	5.96	346	1.71	102.6	6.16	358	(7-60)	1.24	1.61	(1500)	225	150	75
81	471420	13.51	0.123	1.66	99.72	5.98	348	1.71	102.6	6.16	358	(7-60)	1.25	1.62	(1500)	226	151	75
82	477240	13.68	0.123	1.68	100.95	6.06	352	1.71	102.6	6.16	358	(7-60)	1.26	1.64	(1500)	229	153	76
83	483060	13.85	0.122	1.69	101.35	6.08	354	1.71	102.6	6.16	358	(7-60)	1.27	1.65	(1500)	230	153	77
84	488880	14.01	0.122	1.71	102.57	6.15	358	1.71	102.6	6.16	358	(7-60)	1.28	1.67	(1500)	233	155	78
85	494700	14.18	0.121	1.72	102.94	6.18	359	1.71	102.6	6.16	358	(7-60)	1.29	1.67	(1500)	233	156	78
86	500520	14.35	0.121	1.74	104.15	6.25	363	2.16	129.9	7.79	453	(7-70)	1.30	1.69	(1500)	236	157	79
87	506340	14.51	0.120	1.74	104.49	6.27	365	2.16	129.9	7.79	453	(7-70)	1.31	1.70	(1500)	237	158	79
88	512160	14.68	0.120	1.76	105.69	6.34	369	2.16	129.9	7.79	453	(7-70)	1.32	1.72	(1500)	240	160	80
89	517980	14.85	0.120	1.78	106.89	6.41	373	2.16	129.9	7.79	453	(7-70)	1.34	1.74	(1500)	242	162	81
90	523800	15.01	0.119	1.79	107.19	6.43	374	2.16	129.9	7.79	453	(7-70)	1.34	1.74	(1500)	243	162	81
91	529620	15.18	0.119	1.81	108.38	6.50	378	2.16	129.9	7.79	453	(7-70)	1.36	1.76	(1500)	246	164	82
92	535440	15.35	0.118	1.81	108.65	6.52	379	2.16	129.9	7.79	453	(7-70)	1.36	1.77	(1500)	246	164	82
93	541260	15.51	0.118	1.83	109.83	6.59	383	2.16	129.9	7.79	453	(7-70)	1.37	1.79	(1500)	249	166	83
94	547080	15.68	0.117	1.83	110.07	6.60	384	2.16	129.9	7.79	453	(7-70)	1.38	1.79	(1500)	250	166	83
95	552900	15.85	0.117	1.85	111.25	6.67	388	2.16	129.9	7.79	453	(7-70)	1.39	1.81	(2000)	252	168	84
96	558720	16.01	0.117	1.87	112.42	6.74	392	2.16	129.9	7.79	453	(7-70)	1.41	1.83	(2000)	255	170	85
97	564540	16.18	0.116	1.88	112.62	6.76	393	2.16	129.9	7.79	453	(7-70)	1.41	1.83	(2000)	255	170	85
98	570360	16.35	0.116	1.90	113.78	6.83	397	2.16	129.9	7.79	453	(7-70)	1.42	1.85	(2000)	258	172	86
99	576180	16.51	0.116	1.92	114.94	6.90	401	2.16	129.9	7.79	453	(7-70)	1.44	1.87	(2000)	261	174	87
100	582000	16.68	0.115	1.92	115.10	6.91	402	2.16	129.9	7.79	453	(7-70)	1.44	1.87	(2000)	261	174	87

Residual overpressure / V domestic hot water circulation > draw-off standby

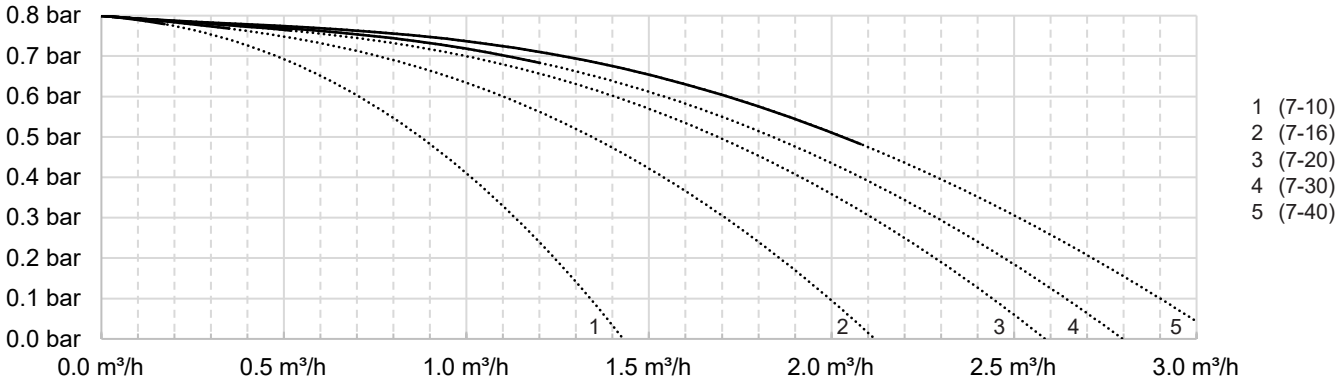

Residual overpressure / domestic hot water circulation > with draw-off Vs

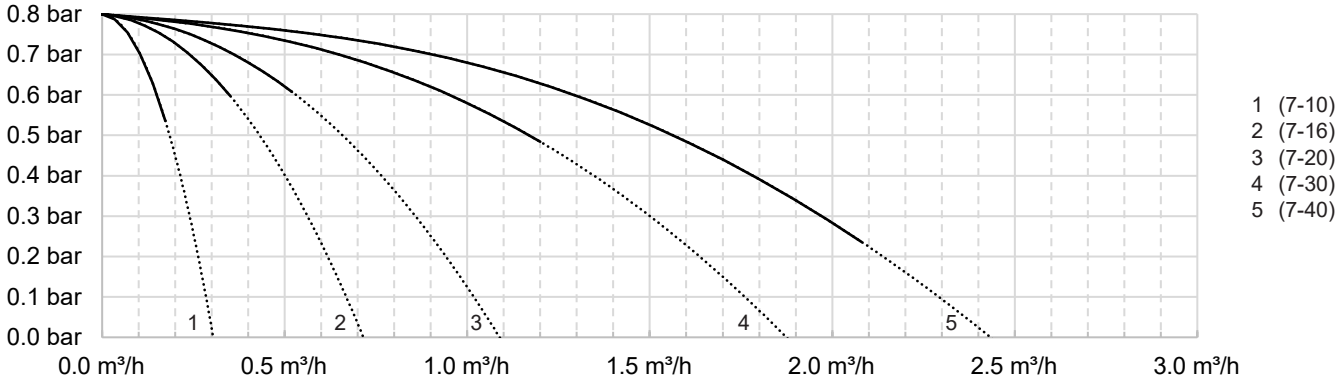

Residual overpressure / V domestic hot water circulation > draw-off standby

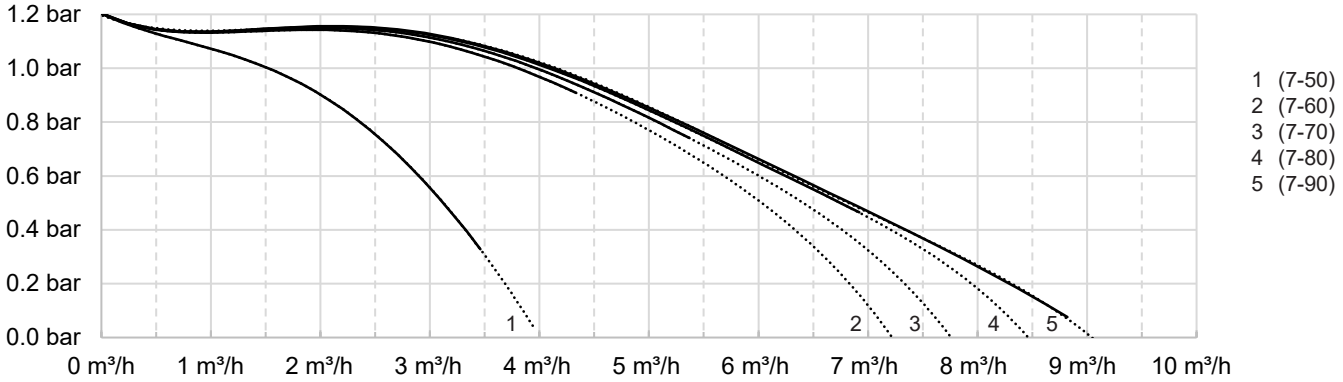

Residual overpressure / domestic hot water circulation > with draw-off Vs

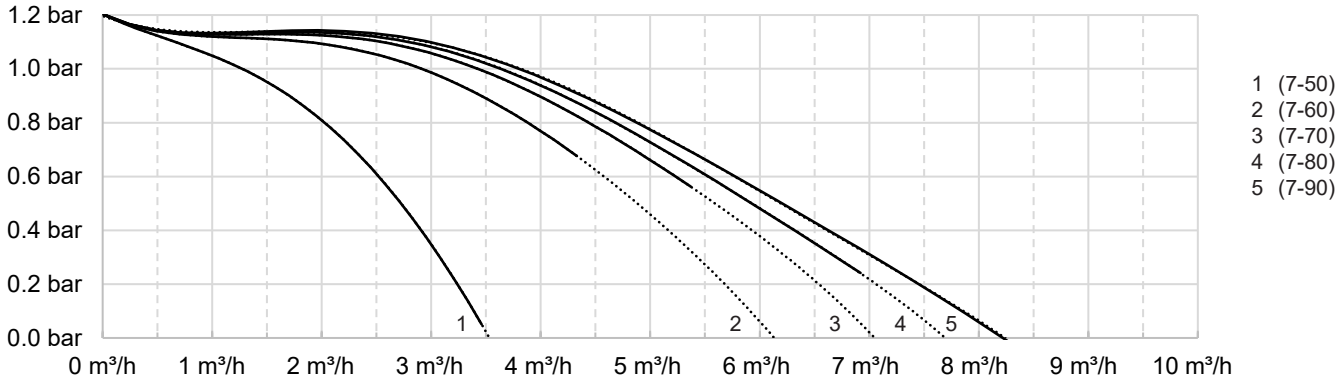

all values with open line balancing valve
dotted lines = values above nominal performance range

ΔP / V max / cold water > domestic hot water

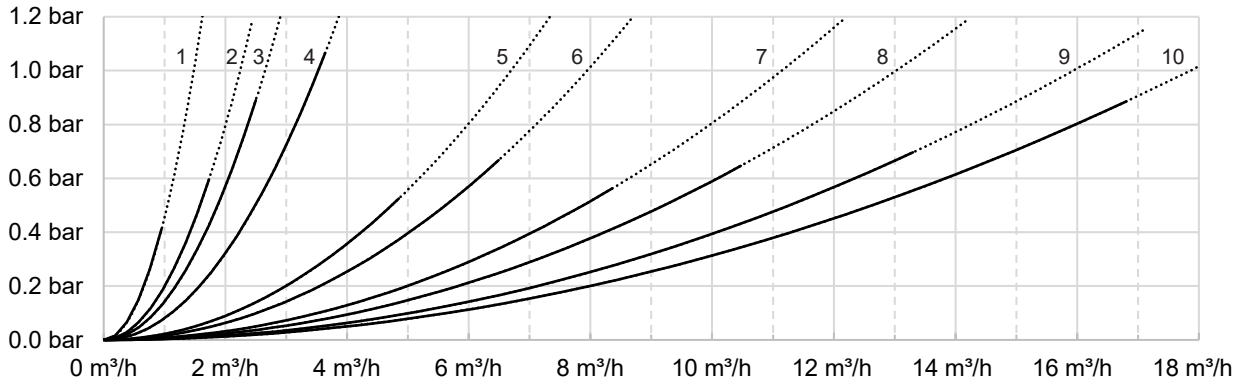

Residual overpressure / charging circuit flow HT

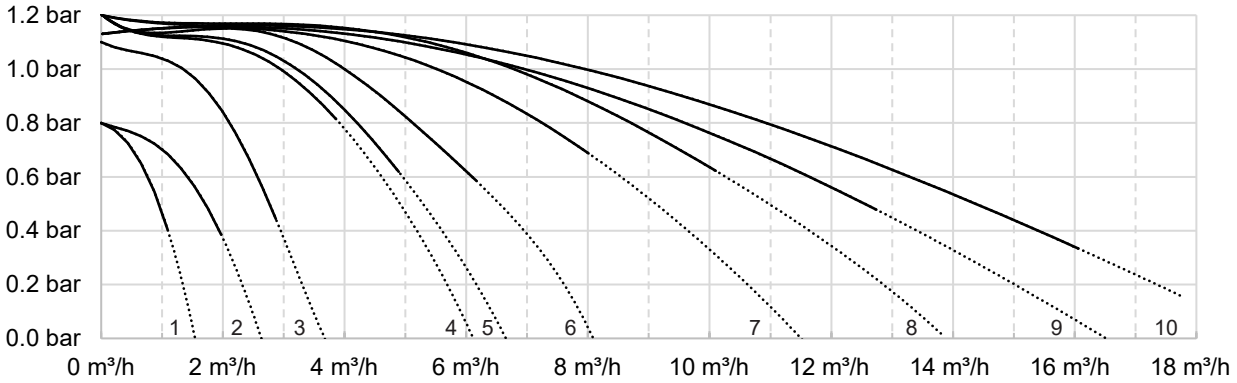

Residual overpressure / charging circuit flow LT

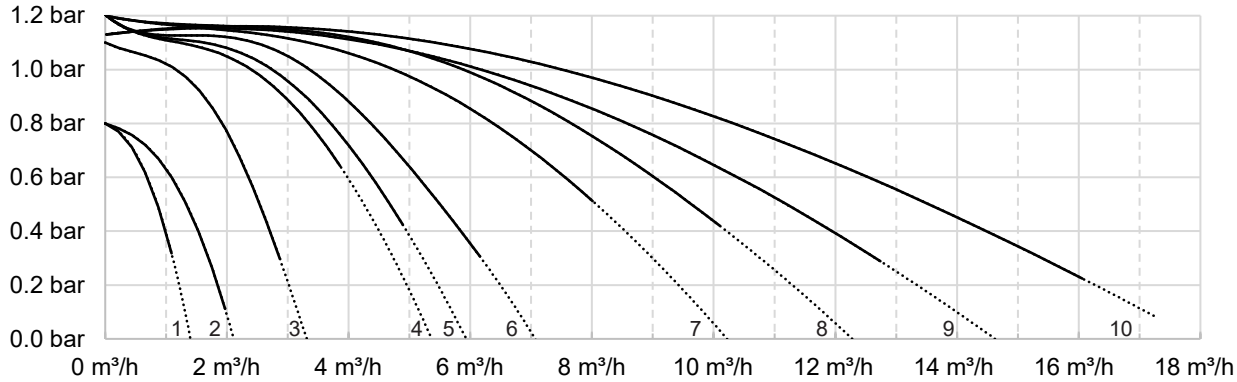

all values with open line balancing valve
dotted lines = values above nominal performance range

Charging module TransTherm® aqua FS (7-10 to 7-50)

(Dimensions in mm)

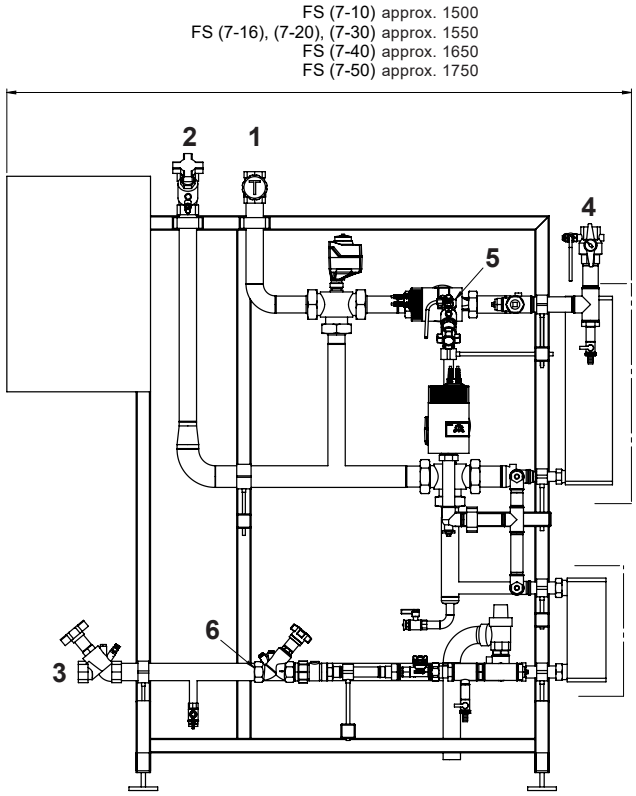

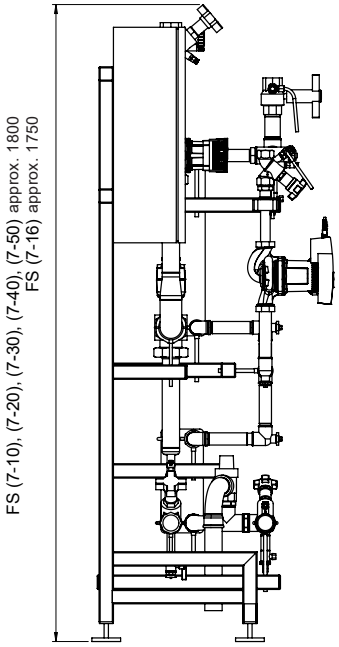

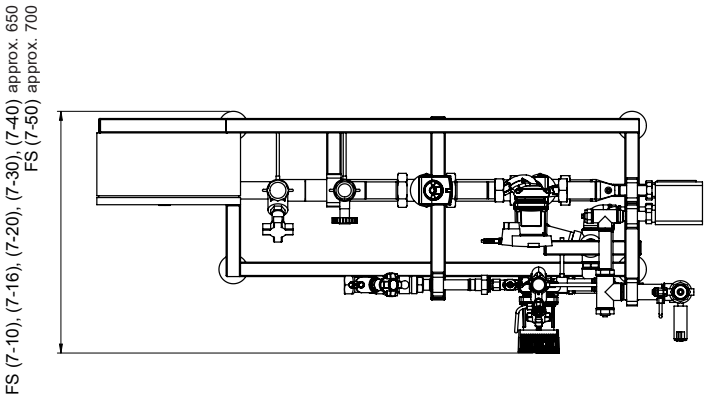

		(7-10)	(7-16)	(7-20) (7-30)	(7-40)	(7-50)
1	Charging circuit FL	DN 20, Rp ¾″	DN 25, Rp 1″	DN 32, Rp 1¼″	DN 32, Rp 1¼″	DN 40, Rp 1½″
2	Charging circuit HT RT	DN 20, Rp ¾″	DN 25, Rp 1″	DN 32, Rp 1¼″	DN 32, Rp 1¼″	DN 40, Rp 1½″
3	Charging circuit LT RT	DN 20, Rp ¾″	DN 25, Rp 1″	DN 32, Rp 1¼″	DN 32, Rp 1¼″	DN 40, Rp 1½″
4	Domestic hot water	DN 20, Rp ¾″	DN 20, Rp ¾″	DN 25, Rp 1″	DN 32, Rp 1¼″	DN 32, Rp 1¼″
5	Domestic hot water circulation	DN 20, Rp ¾″	DN 20, Rp ¾″	DN 20, Rp ¾″	DN 25, Rp 1″	DN 25, Rp 1″
6	Cold water	DN 20, Rp ¾″	DN 20, Rp ¾″	DN 25, Rp 1″	DN 32, Rp 1¼″	DN 32, Rp 1¼″

Rp = Internal thread

Charging module TransTherm® aqua FS (7-60 to 7-90)

(Dimensions in mm)

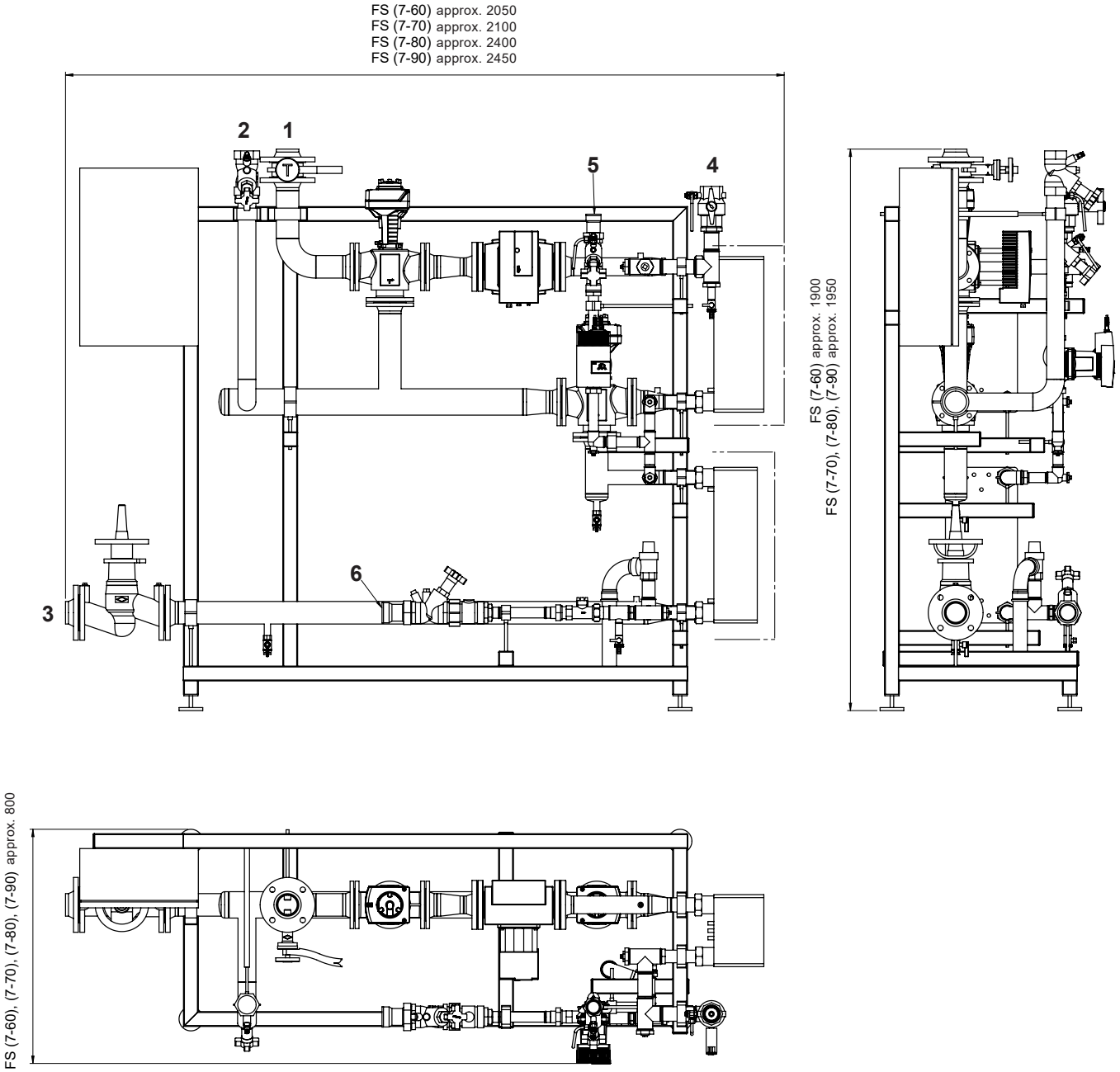

		(7-60) (7-70)		(7-80) (7-90)	
1	Charging circuit FL	DN 50, Rp 2″	(IT)	DN 65, Rp 2½″	(IT)
2	Charging circuit HT RT	DN 50, Rp 2″	(IT)	DN 65, Rp 2½″	(IT)
3	Charging circuit LT RT	DN 50, Rp 2″	(IT)	DN 65, Rp 2½″	(IT)
4	Domestic hot water	DN 40, Rp 1½″	(IT)	DN 50, Rp 2″	(IT)
5	Domestic hot water circulation	DN 32, Rp 1¼″	(IT)	DN 40, Rp 1½″	(IT)
6	Cold water	DN 40, Rp 1½″	(IT)	DN 50, Rp 2″	(IT)

Water heating

TransTherm® aqua FS

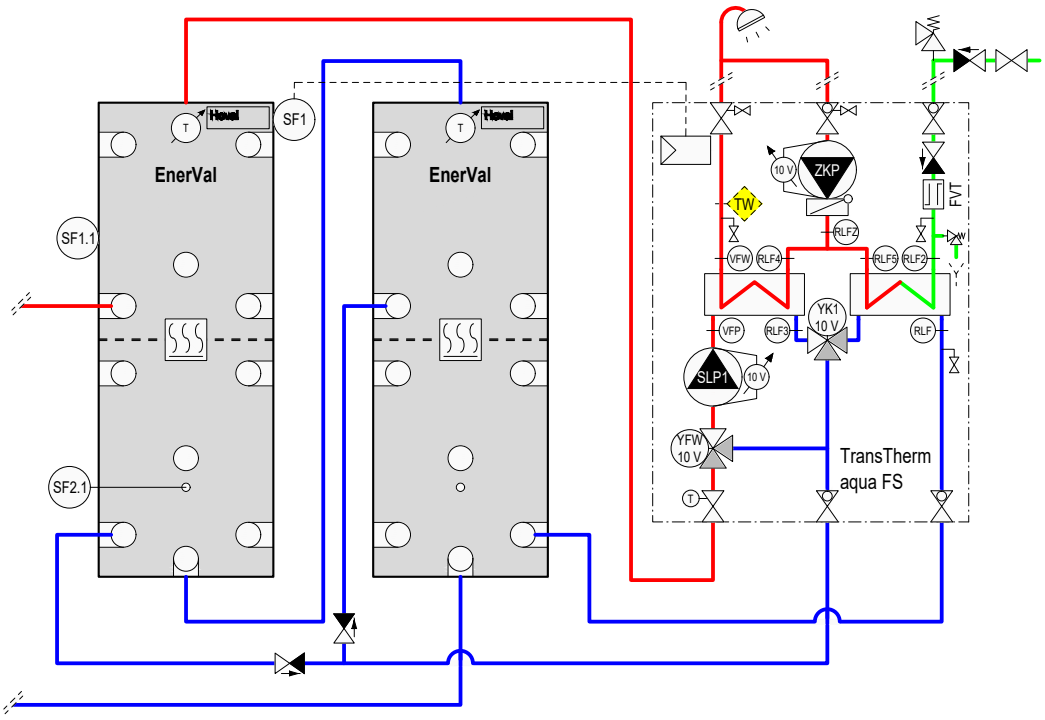

TTE-FW	Basic module district heating/fresh water
TW	Temperature monitor (if required)
VFW	Flow sensor DHW
RLF4	Return sensor DHW
RLF5	Return sensor DHW
RLF2	Return sensor cold water
RLFZ	Return sensor circulation
SF1	Calorifier sensor
SF1.1	Calorifier sensor (heat generator)
SF2.1	Calorifier sensor (heat generator)
ZKP	Circulation sensor
FVT	Flow rate sensor
VFP	Flow sensor primary
RLF3	Return sensor HT primary
RLF	Return sensor LT primary
SLP1	Calorifier charging pump
YFW	Three-way valve with drive (mixing valve)
YK1	Three-way valve with drive (distributor valve)
ZKP	Circulating pump

Option

BM	TopTronic® E control module

Notice
A safety valve (6 bar) must be installed in the cold water line.
The fresh water module is already protected with a safety valve (10 bar).

Fresh water module
TransTherm® aqua FT/FTC

Fresh water module for hygienic water heating in the continuous flow principle for single- and two-family homes with:

- high-output, soldered stainless steel plate heat exchanger
  (heat exchanger solder - FT: copper, FTC: stainless steel)
- integrated heating water charging pump
- flow switch for heating water charging pump
- cut-off armatures
- thermostatic hot water temperature control
- stainless steel piping for quick assembly
- wall attachment
- ready-to-connect
- casing made of sheet steel painted in red or white
- base plate

The quick-acting hot water temperature sensor accelerates the closing function of the regulating valve and protects the heat exchanger against overheating and scaling.

Output	65 kW (27 l/min) 57 kW (23 l/min)

Circulation module

for TransTherm® aqua FT (65), FTC (57)

- Pre-assembled, for installation on-site, incl. cable and plug
- Recirculation pump with integrated timer and circulation temperature control, as well as with pre-mounted safety valve (option)

Minimum requirements on water quality for fresh water modules see engineering hot water

Fresh water module

TransTherm® aqua FT/FTC

Fresh water module for hygienic water heating with thermostatic control of the hot water temperature by means of quick-acting water temperature controller

Fresh water module TransTherm® aqua	Output kW	Part No.
FT (65)	65	6040 453
FTC (57)	57	6048 769

Accessories

Ball valve set DVGW
for TransTherm® aqua FT/FTC
6040 456

Casing
for TransTherm® aqua FT/FTC
White colour
6044 175

Casing
for TransTherm® aqua FT/FTC
Red colour
6045 319

Circulation heat exchanger lance R 1″
is screwed into the buffer storage tank and integrated into the circulation line.
Material: Copper, tinned inside
Transmission power approx. 1 kW at 60 °C
Hot water temperature in the buffer storage tank without mixing through the storage tank temperature.
Circulation connections R ½″
Installation length 660 mm
2038 434

Circulation module
for TransTherm® aqua FT/FTC
preassembled, for subsequent installation on the fresh water module
comprising:
Circulation pump with timer switch
Integrated control of the temperature
Non-return flap, ball valve Rp ¾″
cable and plug,
safety valve 10 bar
6040 455

Services

Commissioning
Commissioning by works service or Hoval trained authorised serviceman/company is condition for warranty.

For commissioning and other services please contact your Hoval sales office.

TransTherm® aqua FT/FTC

Type			FT (65)	FTC (57)
• Output		kW	65	57
• Connection dimension	Heating flow/return	Inches	G ¾″ (ext. thread)	
	Cold/hot water	Inches	G ¾″ (ext. thread)	
• Dimensions (W x H x D)	Without casing	mm	440 x 655 x 140	
	With casing	mm	450 x 715 x 150	
	With circulation	mm	440/450 x 940 x 140/150	
• Weight (incl. packaging)		kg	20	23
• Controller protection class			IP 54	IP 54
• Supply voltage		V	230	
• Plate heat exchanger stainless steel			copper-soldered	soldered stainless steel
Heat exchanger DHW side				
• Operating pressure max.		bar	0.5	
• Test pressure		bar	10	
• DHW temperature max.		°C	70	
Design temperatures DHW side				
• Cold water		°C	10	
• Hot water		°C	45	
• Continuous output		l/min	27	23
Heat exchanger heating side				
• Operating pressure max.		bar	10	
• Max. permissible operating temperature		°C	100	
Design temperatures heating side				
• Heating flow		°C	55	
• Heating return		°C	20	
• Flow resistance (at V = 1.5 m³/h)		kPa	34	

TransTherm® aqua FT (65)
HW temperature 45 °C: Tapping capacity - Output - Pressure drops

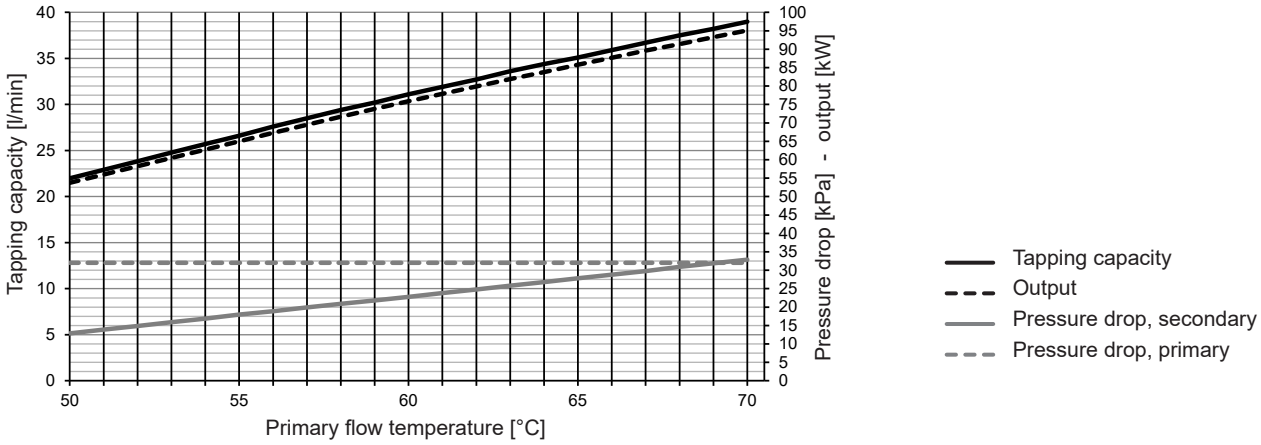

TransTherm® aqua FTC (57)
HW temperature 45 °C: Tapping capacity - Output - Pressure drops

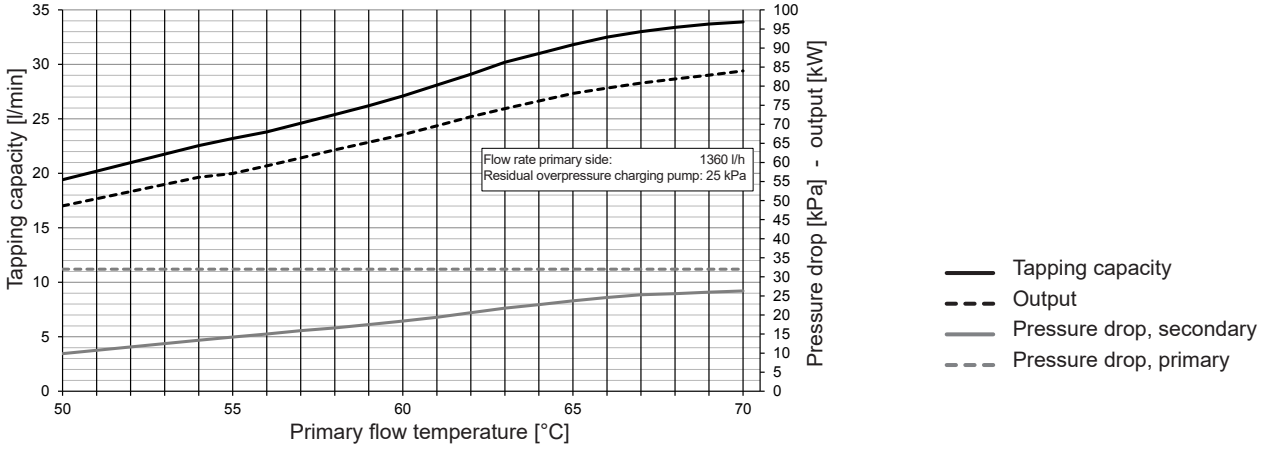

Construction TransTherm® aqua FT/FTC

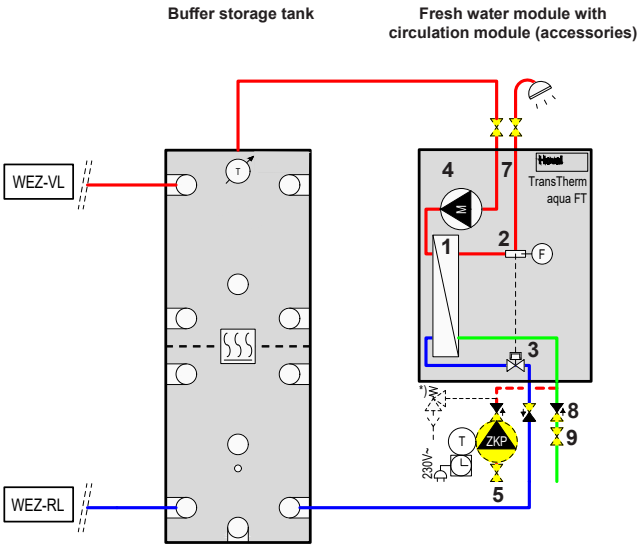

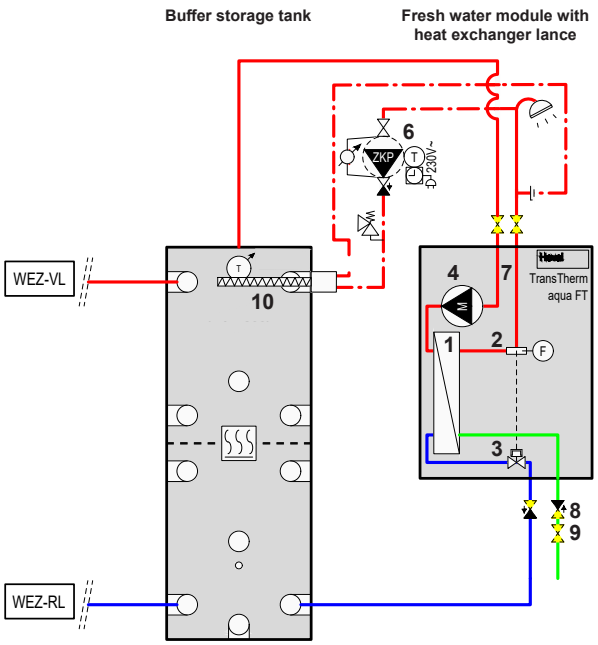

1 Stainless steel plate heat exchanger
2 Hot water sensor, quick-acting
3 Thermostatic control
4 Heating water charging pump
5 Circulation incl. safety valve (optional)
6 Circulation (optional)
7 Flow switch
8 Non-return valve (optional)
9 Cut-off ball valve - flat-sealing (optional)
10 Heat exchanger lance

* Safety valve also necessary with recirculation pump on site

Installation of strainer on site

Functional description Hoval TransTherm® aqua FT/FTC

The Hoval fresh water module TransTherm® aqua FT/FTC, with all piping pre-installed and ready-to-connect, consists of a soldered stainless-steel plate heat exchanger (heat exchanger solder - FT: copper, FTC: stainless steel), an integrated heating water charging pump, a thermostatic controller with tapping detection and hot water temperature control and cut-off devices.

When a hot water tapping point is opened, the heating water charging pump is switched on via the flow detection device and the heating water transported from the buffer storage tank to the heat exchanger.

In the large-dimension plate heat exchanger, the hot water is heated in the counterflow principle, directly before removal and in a continuous flow process, from the cold water temperature to the desired DHW temperature.

The quick-acting water temperature controller ensures maintenance of the desired hot water temperature, providing a constant tapping temperature and optimum maintenance of stratification in the buffer storage tank.

An optional recirculation pump with thermostat ensures that the circulating water maintains the desired temperature.

TransTherm® aqua FT/FTC
(Dimensions in mm)

Casing

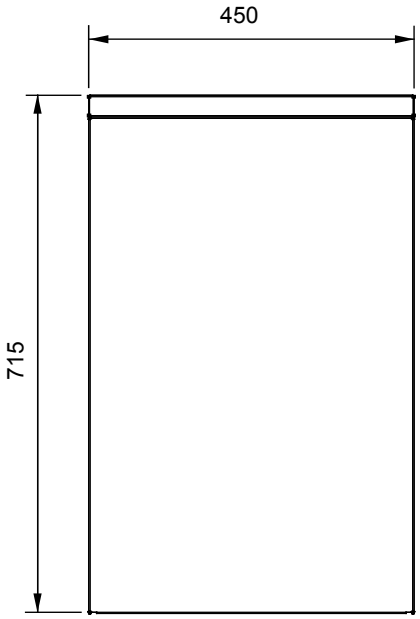

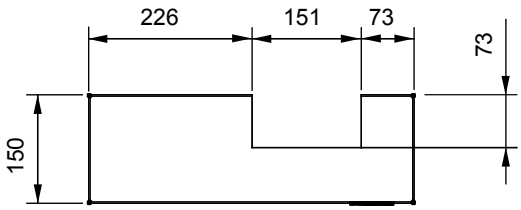

Base plate

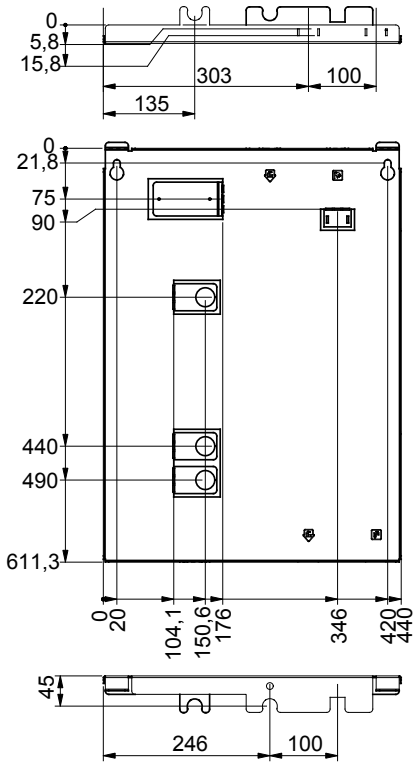

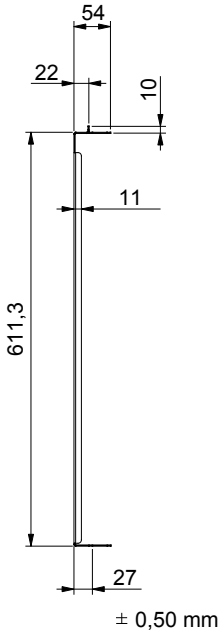

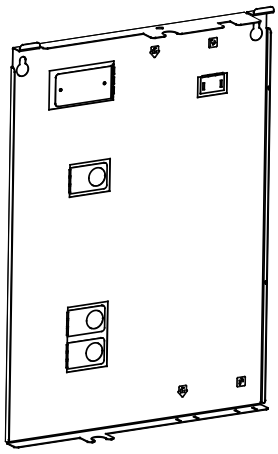

Buffer storage tank EnerVal (100-300)

- Steel buffer storage tank for the hydraulic integration of energy generators
- Thermal insulation made of polyurethane hard foam, foamed on the storage
- Removable foil casing in red
- (100): 2 connection sleeves Rp 1 ½″, 2 connection nozzles R 1″
  (200): 5 connection sleeves Rp 1 ½″
  (300): 8 connection sleeves Rp 1 ½″
- 1 sleeve Rp ½″ with thermometer and immersion sleeve mounted
- 2 sensor channels

Delivery
- Buffer storage tank with foil casing completely mounted and packed

Buffer storage tank EnerVal (500)

- Steel buffer storage tank for the hydraulic integration of energy generators
- Thermal insulation made of polyurethane hard foam, foamed on the calorifier
- Removable foil casing in red
- 8 connection sleeves Rp 1 ½″
- 1 sleeve Rp 1 ½″ for screw-in electrical heating inset
- 1 sleeve Rp 1/2″ with thermometer and immersion sleeve mounted
- 2 sensor channels

Delivery
- Buffer storage tank with foil casing completely mounted and packed

Range

EnerVal type		Nominal content l	Operating pressure bar
(100)	A	117	3
(200)	B	222	3
(300)	B	283	3
(500)	B	473	3
(800)		781	3
(1000)		922	3
(1500)		1416	3
(2000)		2032	3

Buffer storage tank EnerVal (800-2000)

- Steel buffer storage tank for the hydraulic integration of energy generators
- Thermal insulation made of polyester fleece with foil jacket, colour red
- 10 connection sleeves G 2″ (IT)
- 2 sleeves G 1½″ (IT) for screw-in electric heating element
- 3 sleeves G ½″ (IT) for sensor/thermometer
- Terminal strips for contact sensors
- 1 sleeve G 1″ (IT) for circulation lance only with EnerVal (800,1000)
- 1 sleeve G 1″ (IT) for ventilation
- Perforated separating plate in the central area for separation of the temperature zones
- Flow diversions permanently installed
- 13 insulated cover caps made of EPP hard foam, 2-piece (can be broken out)

Delivery
- Buffer storage tank with foil casing completely mounted and packed
- Insulated cover caps already installed (can be removed and broken out)

Buffer storage tank

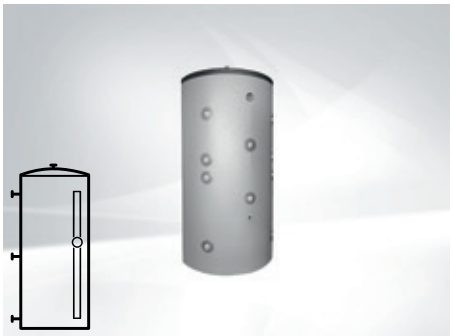

EnerVal (800,1000)
Available from summer 2023

EnerVal (1500,2000)
Available from autumn 2023

EnerVal (100-2000)

Steel container unmachined on inside, EnerVal (100-500) with casing finished, EnerVal (800-2000) thermal insulation already installed

EnerVal type		Nominal content l	Part No.
(100)	A	117	7016 826
(200)	B	222	7013 681
(300)	B	283	7015 975
(500)	B	473	7015 976
(800)		781	7019 129
(1000)		922	7019 130
(1500)		1416	7019 131
(2000)		2032	7019 132

Accessories

Protective tube immersion 6061 045
sleeve set 200 ½", 4 x
For installation of maximum 4 sensors
Nickel-plated brass
Installation length = 187 mm
Outer Ø: 18 mm, inner Ø: 16 mm
including 3 segment springs 90°,
1 Omega clamping spring

Protective tube immersion sleeve SB280 ½" 2018 837
Nickel-plated brass
Installation length = 280 mm
Outer Ø: 9 mm, inner Ø: 7 mm

Services

Commissioning
Commissioning by works service or Hoval trained authorised serviceman/company is condition for warranty.

For commissioning and other services please contact your Hoval sales office.

EnerVal (100-2000)

Type		(100)	(200)	(300)	(500)	(800)	(1000)	(1500)	(2000)
• Nominal content	litres	117	222	283	473	781	922	1416	2012
• Operating pressure/test pressure	bar	3/4	3/4	3/4	3/4	3/4	3/4	3/4	3/4
• Operating temperature min./max.	°C	5-95	5-95	5-95	5-95	20-95	20-95	20-95	20-95
• Thermal insulation PU rigid foam foamed	mm	50	50	75	75	-	-	-	-
• Thermal insulation polyester fleece	mm	-	-	-	-	150	150	150	150
• Thermal insulation λ	W/mK	0.027	0.027	0.027	0.027	0.04	0.04	0.04	0.04
• Fire protection class		B2	B2	B2	B2	B2	B2	B2	B2
• Heat loss at 65 °C	W	51	53	54	72	136	144	168	191
• Transport weight	kg	41	59	79	111	165	180	284	515
• U value	W/m^2K	0.359	0.359	0.279	0.296	0.360	0.341	0.328	0.311
• Dimensions		see table of dimensions							

Outflow velocity flow lance DN 40

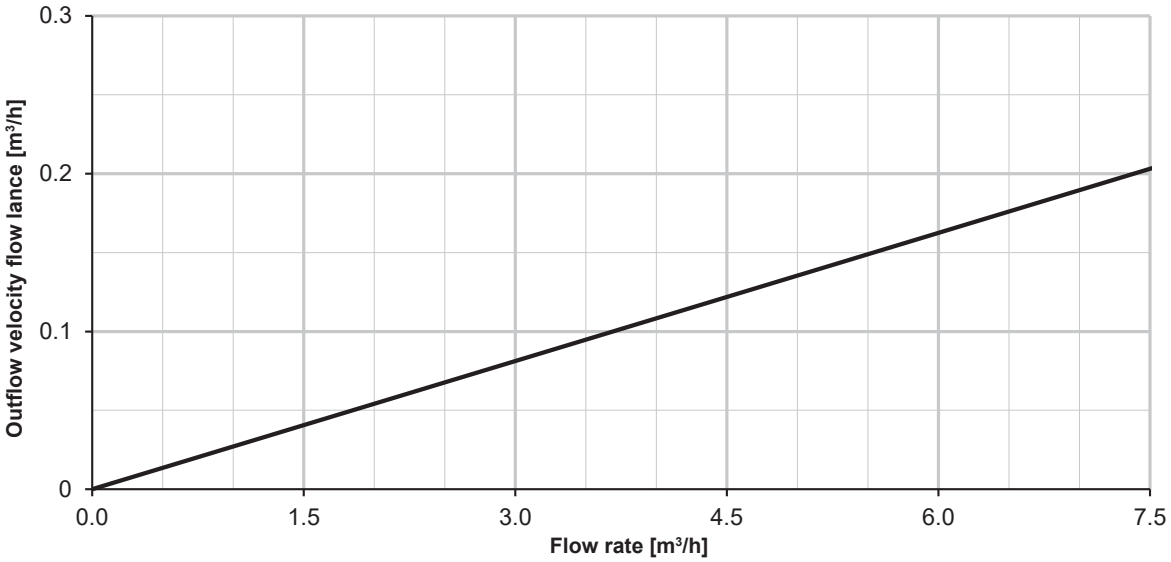

Velocity in the connection nozzles and inflow velocity with flow deflection in the EnerVal (800-2000)

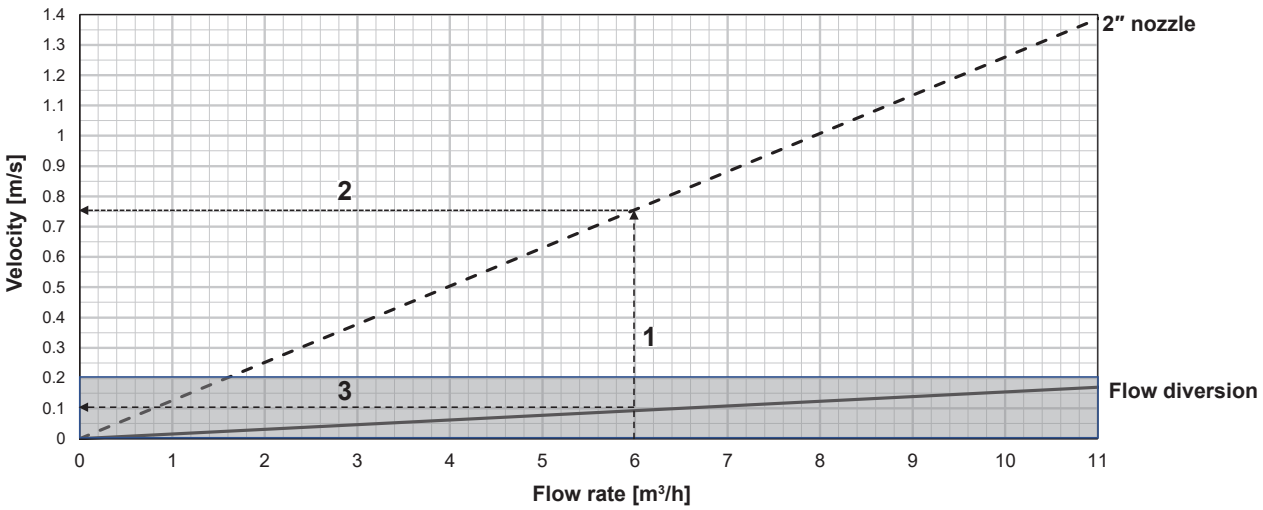

1 = flow rate
2 = velocity in the connection nozzles
3 = inflow velocity with flow deflection in the EnerVal

Example of inlet velocity distribution by flow diversions

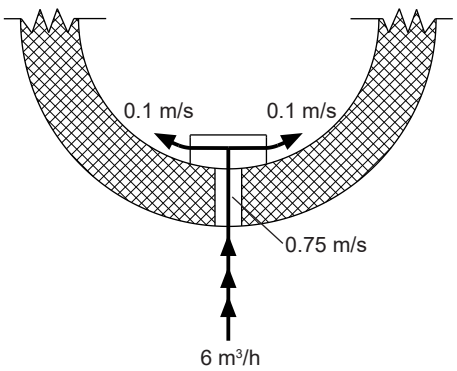

EnerVal (100)
(Dimensions in mm)

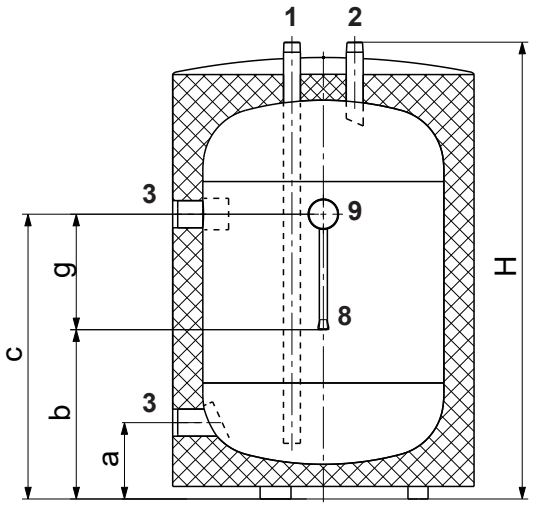

EnerVal (200-500)

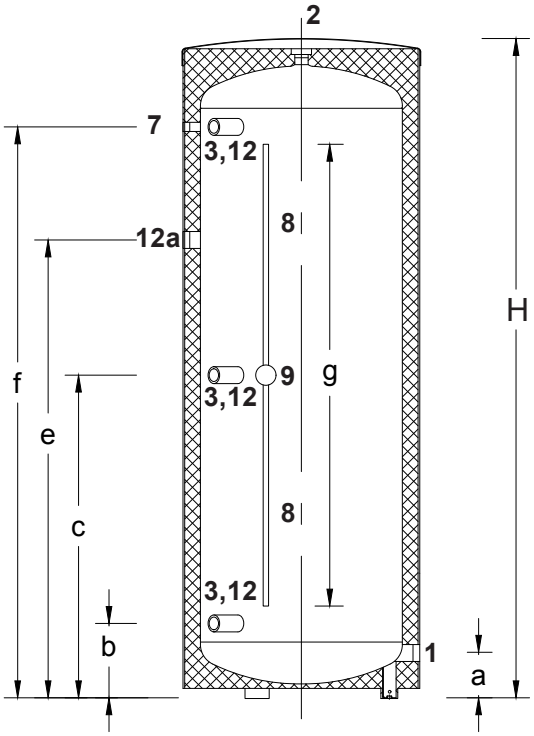

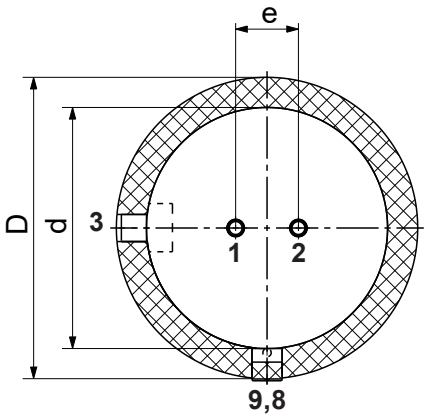

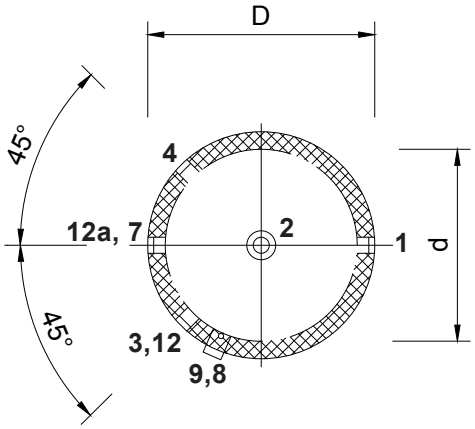

			Type (100)	Type (200-500)
1	Heating connection	return discharge	R 1″ (ET)	G 1½″ (IT)
2	Heating connection	flow discharge	R 1″ (ET)	G 1½″ (IT)
3	Heat generator connection	flow/return	G 1½″ (IT)	G 1½″ (IT)
4	Heat generator connection	flow/return 3 x, only with EnerVal (300,500)		G 1½″ (IT)
7	Sleeve with mounted immersion sleeve and thermometer			
8	Sensor channel inner Ø 11 mm			
9	Removable cap (60 mm) for positioning the sensor in the sensor channel			
12	Connection for screw-in electric heating element (Positioning depends on the system, see hydraulic schematics of the heat generator)			G 1½″ (IT)
12a	Additional connection for screw-in electric heating element, only for EnerVal (500)			G 1½″ (IT)

1+2 For EnerVal (100), suitable for direct installation of an armature group LG/HA 25-2 and 32-2

EnerVal type	D	d	H	a	b	c	e	f	g	Tilting dimension
(100)	600	480	910	152	337	567	125	-	230	985
(200)	600	480	1440	152	300	720	-	1140	860	1560
(300)	650	480	1780	152	300	890	-	1479	1285	1895
(500)	750	597	1921	127	220	946	1400	1670	1360	2025

Variation because of the production tolerance possible
Dimension +/- 10 mm

EnerVal (800-2000)
(Dimensions in mm)

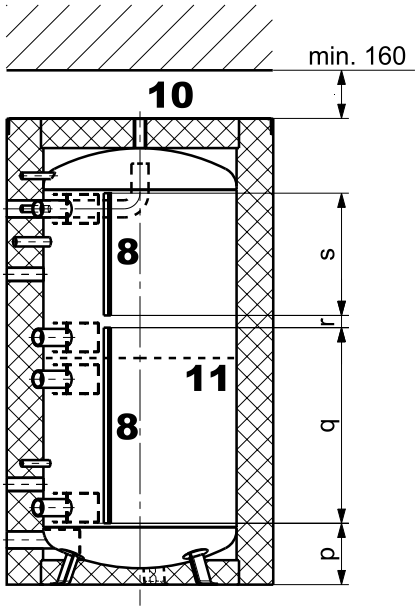

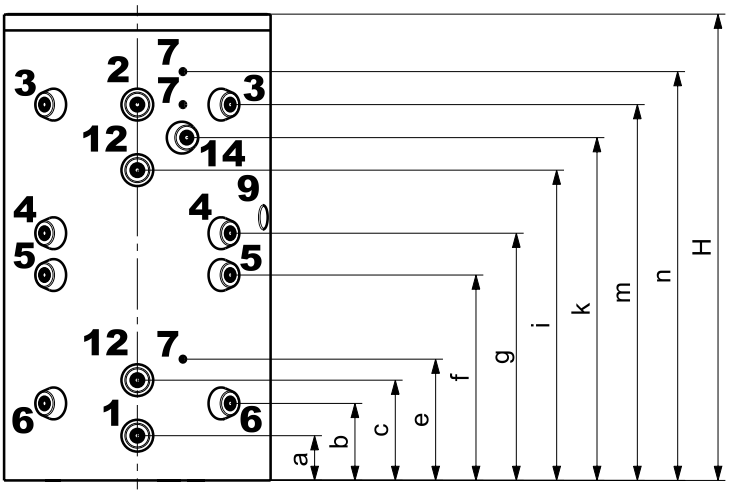

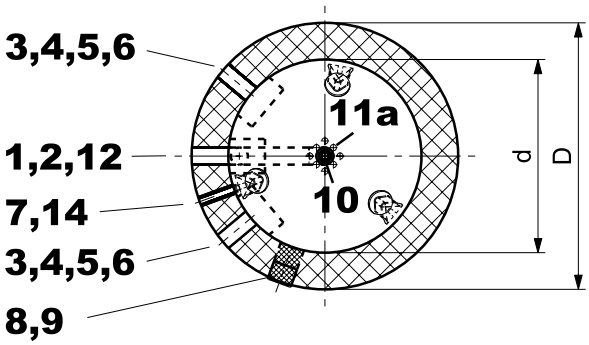

Variation because of the production tolerance possible
Dimension +/- 10 mm

1	Heating connection	return discharge (inflow restrictor)	G 2″ (IT)
2	Heating connection	flow discharge (single-layer elbow pipe)	G 2″ (IT)
3	Heat generator connection	flow top (inflow restrictor)	G 2″ (IT)
4	Heat generator connection	return top (inflow restrictor)	G 2″ (IT)
5	Heat generator connection	flow bottom (inflow restrictor)	G 2″ (IT)
6	Heat generator connection	return bottom (inflow restrictor)	G 2″ (IT)
7	Sleeve for immersion sleeve, thermostat or thermometer		G ½″ (IT)
8	Sensor terminal strip		2 x
9	Removable cap (100 mm) for positioning the sensor		
10	Possible air vent		G 1″ (IT)
11	Separating plate		
11a	Holes in the separating plate		12 x
12	Connection for electric heating element		G 1½″ (IT)
14	Connection for circulation lance, **attention:** only for type (800,1000)		G 1″ (IT)

EnerVal type	D	d	H	a	b	c	e	f	g	i	k	m	n	p	q	r	s	Tilting dimension
(800)	1090	790	1907	183	315	410	496	840	1011	1269	1402	1537	1672	251	800	50	500	1945
(1000)	1090	790	2197	183	369	468	569	970	1171	1472	1596	1759	1942	370	800	100	500	2230
(1500)	1300	1000	2135	220	368	451	549	941	1137	1431	-	1699	1839	339	800	100	500	2179
(2000)	1500	1200	2145	220	382	430	529	928	1127	1425	-	1672	1839	350	800	80	500	2210

Energy buffer storage tank EnerVal G (800,1000)

- Steel buffer storage tank for the hydraulic integration of energy generators
- Thermal insulation made of polyester fibre with foil jacket, colour red
- 8 connection flanges DN 65 (PN 16)
- 2 connection flanges DN 80 (PN 16)
- 2 flanges DN 110 for flange-mounted electric heating element
- 3 sleeves G ½″ (IT) for sensor/thermometer
- Terminal strips for contact sensors
- 1 sleeve G 1″ (IT) for circulation lance
- 1 sleeve G 1″ (IT) for ventilation
- Perforated separating plate in the central area for separation of the temperature zones
- Flow diversions permanently installed
- 12 insulated flange hoods
- 1 insulated cover cap made of EPP hard foam, 2-piece (can be broken out)

Delivery
- Buffer storage tank mounted and packed with foil jacket (can be removed for installation)
- Insulated flange hoods and cover cap already mounted (removable)

Range

EnerVal G type	Nominal content l	Operating pressure bar
(800)	788	6
(1000)	928	6
(1500)	1384	6
(2500)	2419	6
(4000)	4021	6
(6000)	5897	6

Energy buffer storage tank EnerVal G (1500,2500)

- Steel buffer storage tank for the hydraulic integration of energy generators
- Thermal insulation made of polyester fibre with foil jacket, colour red
- 8 connection flanges DN 80 (PN 16)
- 2 connection flanges DN 100 (PN 16)
- 2 flanges DN 180 for flange-mounted electric heating element
- 3 sleeves G ½″ (IT) for sensor/thermometer
- Terminal strips for contact sensors
- 1 sleeve G 1″ (IT) for ventilation
- Perforated separating plate in the central area for separation of the temperature zones
- Flow diversions permanently installed
- 12 insulated flange hoods

Delivery
- Buffer storage tank (1500) mounted and packed with foil jacket (can be removed for installation)
- Buffer storage tank (2500) thermal insulation separate
- Insulated flange hoods already mounted (removable)

Energy buffer storage tank EnerVal G (4000,6000)

- Steel buffer storage tank for the hydraulic integration of energy generators
- Without thermal insulation (on-site)
- 8 connection flanges DN 100 (PN 16)
- 2 connection flanges DN 125 (PN 16)
- 2 flanges DN 180 for flange-mounted electric heating element
- 3 sleeves G ½″ (IT) for sensor/thermometer
- Terminal strips for contact sensors
- 1 sleeve G 1″ (IT) for ventilation
- Perforated separating plate in the central area for separation of the temperature zones
- Flow diversions permanently installed

Delivery
- Buffer storage tank raw packed
- Thermal insulation to be provided on site

Buffer storage tank

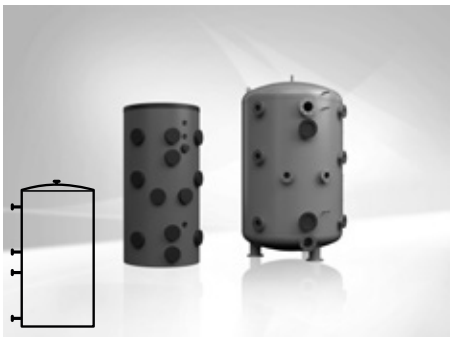

EnerVal G (800,1000)
Available from summer 2023

EnerVal G (1500-6000)
Available from autumn 2023

EnerVal G (800-6000)

Steel tank raw on the inside
EnerVal G (800-1500) fully insulated;
EnerVal G (2500), separate thermal insulation;
EnerVal G (4000,6000) packaged raw,
thermal insulation to be provided on site

EnerVal G type	Nominal content l	Part No.
(800)	788	7019 133
(1000)	928	7019 134
(1500)	1384	7019 135
(2500)	2419	7019 136
(4000)	4021	6059 869
(6000)	5897	6059 870

Accessories

Protective tube immersion — 6061 045
sleeve set 200 ½", 4 x
For installation of maximum 4 sensors
Nickel-plated brass
Installation length = 187 mm
Outer Ø: 18 mm, inner Ø: 16 mm
including 3 segment springs 90°,
1 Omega clamping spring

Protective tube immersion sleeve SB280 ½" — 2018 837
Nickel-plated brass
Installation length = 280 mm
Outer Ø: 9 mm, inner Ø: 7 mm

Services

Commissioning
Commissioning by works service or Hoval trained authorised serviceman/company is condition for warranty.

For commissioning and other services please contact your Hoval sales office.

EnerVal G (800-6000)

Type		(800)	(1000)	(1500)	(2500)	(4000)	(6000)
• Nominal content	l	788	928	1384	2360	3907	5815
• Operating/test pressure	bar	6/8	6/8	6/8	6/8	6/8	6/8
• Maximum operating temperature	°C	95	95	95	95	95	95
• Thermal insulation made from polyester fleece	mm	150	150	150	150	-	-
• Thermal insulation λ	W/mK	0.040	0.040	0.040	0.040	-	-
• Fire protection class		B2	B2	B2	B2	-	-
• Heat loss at 65 °C	W	135	144	168	203	-	-
• Transport weight	kg	187	201	371	788	1233	1854
• U value	W/m^2K	0.357	0.341	0.328	0.295	-	-
• Dimensions		see dimensional drawing					

Velocity in the connection nozzles and inflow velocity with flow deflection in the EnerVal G (800,1000)

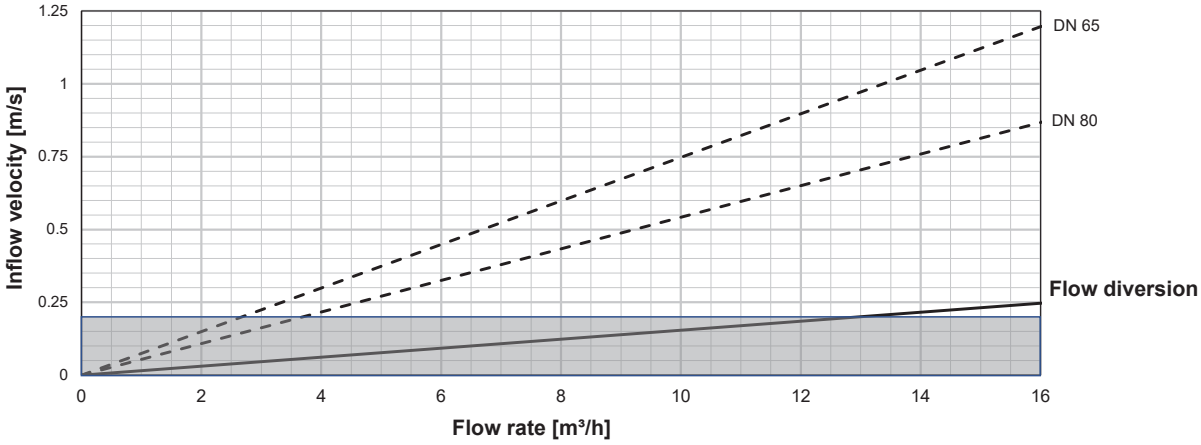

EnerVal G (1500-6000)

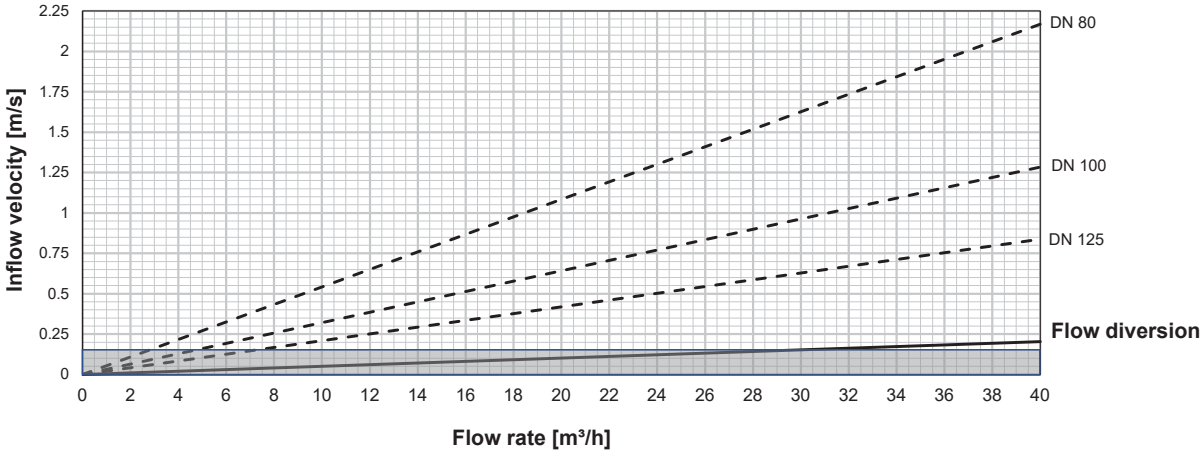

Example of inlet velocity distribution by flow diversions

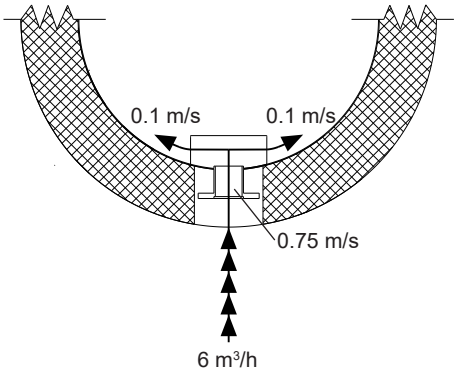

EnerVal G (800-2500)

(Dimensions in mm)

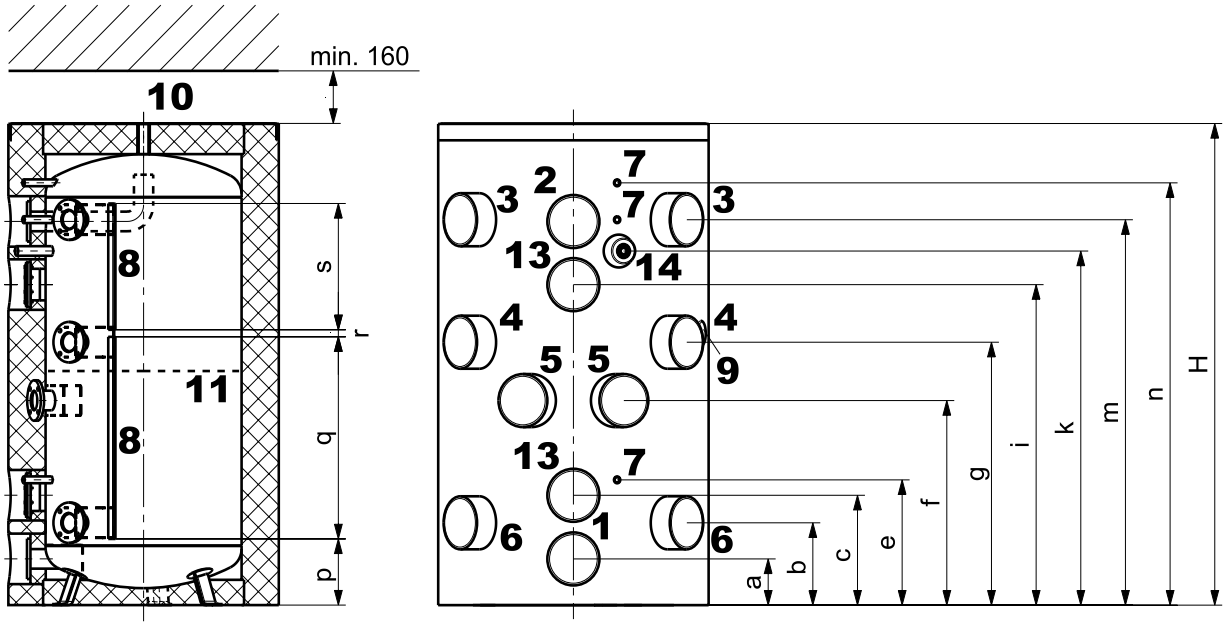

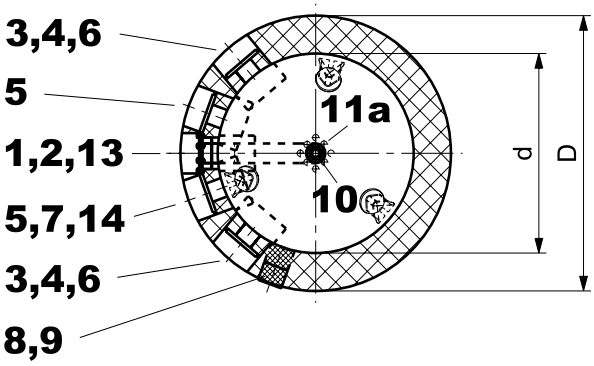

Variation because of the production tolerance possible
Dimension +/- 10 mm

			Type (800,1000)	Type (1500,2500)
1	Heating connection	return discharge (inflow restrictor)	DN 80, 4 x M16	DN 100, 4 x M16
2	Heating connection	flow discharge (single-layer elbow pipe)	DN 80, 4 x M16	DN 100, 4 x M16
3	Heat generator connection	flow top (inflow restrictor)	DN 65, 4 x M12	DN 80, 4 x M16
4	Heat generator connection	return top (inflow restrictor)	DN 65, 4 x M12	DN 80, 4 x M16
5	Heat generator connection	flow bottom (inflow restrictor)	DN 65, 4 x M12	DN 80, 4 x M16
6	Heat generator connection	return bottom (inflow restrictor)	DN 65, 4 x M12	DN 80, 4 x M16
7	Sleeve for immersion sleeve, thermostat or thermometer		G ½″ (IT)	G ½″ (IT)
8	2 sensor terminal strips			
9	Removable cap (100 mm) for positioning the sensor			
10	Possible air vent		G 1″ (IT)	G 1″ (IT)
11	Separating plate			
11a	Holes in the separating plate		12 x	12 x
13	Hand-hole flange (flange-mounted electric heating element) (800,1000) Ø 180/110 mm, pitch circle Ø 150 mm, 8 x M10 (1500,2500) Ø 257/180 mm, pitch circle Ø 225 mm, 10 x M10			
14	Connection for circulation lance, **attention:** only for type (800,1000)		G 1″ (IT)	-

EnerVal G type	D	d	H	a	b	c	e	f	g	i	k	m	n	p	q	r	s	Tilting measure
(800)	1090	790	1907	183	326	435	496	810	1041	1269	1402	1526	1672	262	800	28	500	1945
(1000)	1090	790	2197	183	369	468	569	955	1186	1472	1596	1759	1942	370	800	100	500	2230
(1500)	1300	1000	2089	180	358	489	529	894	1144	1360	-	1679	1819	319	800	100	500	2154
(2500)	1500	1200	2500	250	435	560	645	1100	1352	1670	-	2003	2211	400	800	100	800	2567

EnerVal G (4000,6000)

(Dimensions in mm)

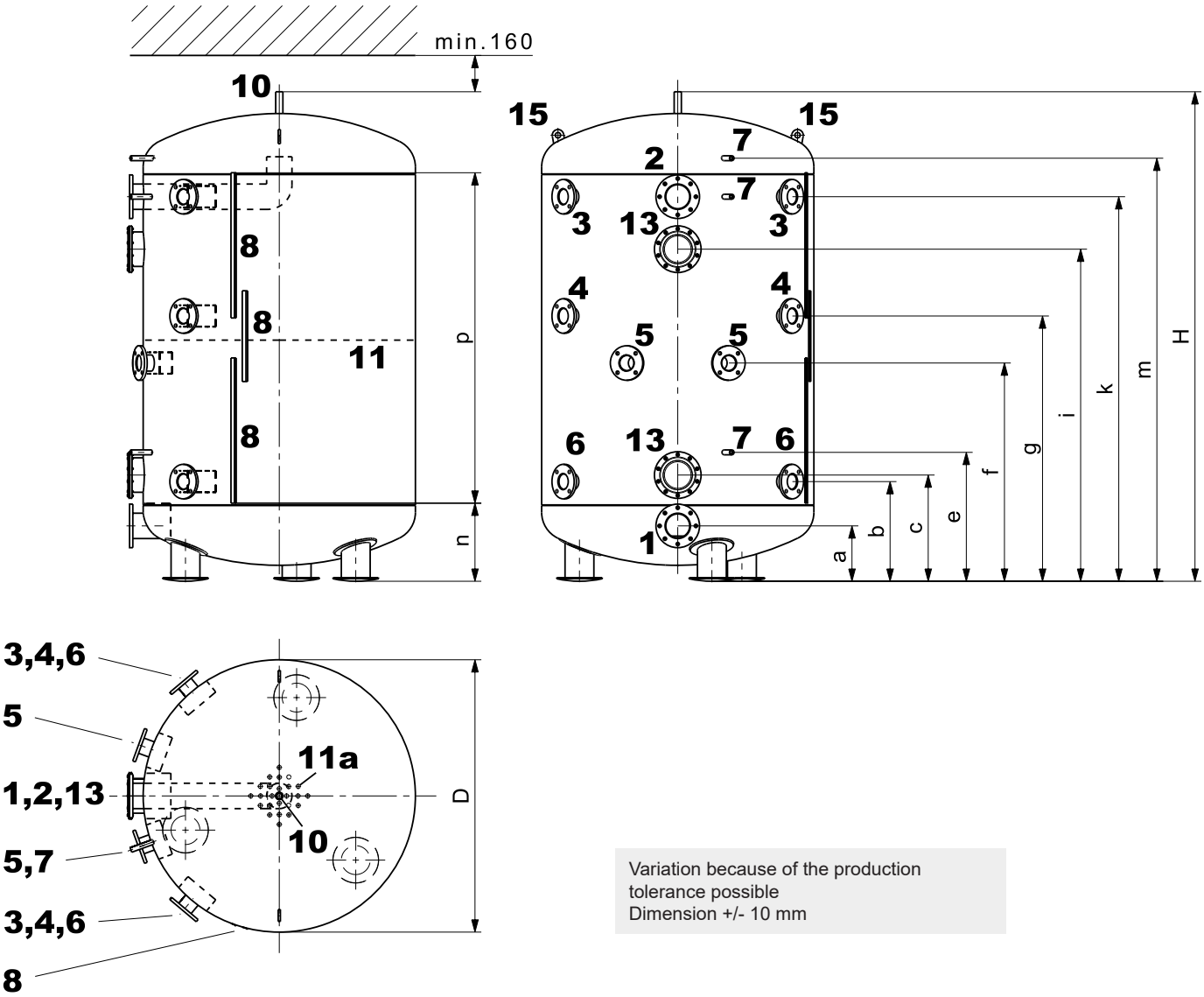

Variation because of the production tolerance possible
Dimension +/- 10 mm

1	Heating connection	return discharge (inflow restrictor)	DN 125, 8 x M16
2	Heating connection	flow discharge (single-layer elbow pipe)	DN 125, 8 x M16
3	Heat generator connection	flow top (inflow restrictor)	DN 100, 4 x M16
4	Heat generator connection	return top (inflow restrictor)	DN 100, 4 x M16
5	Heat generator connection	flow bottom (inflow restrictor)	DN 100, 4 x M16
6	Heat generator connection	return bottom (inflow restrictor)	DN 100, 4 x M16
7	Sleeve for immersion sleeve, thermostat or thermometer		G ½″ (IT)
8	3 sensor terminal strips		
10	Possible air vent		G 1″ (IT)
11	Separating plate		
11a	Holes in the separating plate		24 x
13	Hand-hole flange (flange-mounted electric heating element) Ø 257/180 mm, pitch circle Ø 225 mm, 10 x M10		
15	Transport strap		

EnerVal G type	D	H	a	b	c	e	f	g	i	k	m	n	p	Tilting measure
(4000)	1500	2696	305	549	585	710	1202	1461	1829	2118	2330	430	1820	2773
(6000)	1500	3802	302	625	805	985	1704	2064	2603	3142	3442	550	2700	3858

Buffer storage tank - cold storage tank EnerVal G cool (800,1000)

- Steel buffer storage tank for the hydraulic integration of energy generators, coating with water-based paint
- Cold insulation made of synthetic rubber (19 mm), glued on diffusion-proof, with plastic outer jacket (red)
- 8 connection flanges DN 65 (PN 16)
- 2 connection flanges DN 80 (PN 16)
- 1 sleeve G 1½″ (IT) for electric heating element
- 5 sleeves G ½″ (IT) for sensor/thermometer
- 1 sleeve G 1″ (IT) for circulation lance
- 1 sleeve G 1″ (IT) for ventilation
- Perforated separating plate in the central area for separation of the temperature zones
- Flow diversions permanently installed

Delivery
- Cold storage tank mounted with cold insulation (glued on diffusion-proof)

Range

EnerVal G cool type	Nominal content l	Operating pressure bar
(800)	793	6
(1000)	889	6
(1500)	1440	6
(2500)	2518	6
(4000)	4035	6
(6000)	5849	6

Buffer storage tank - cold storage tank EnerVal G cool (1500,2500)

- Steel buffer storage tank for the hydraulic integration of energy generators, coating with water-based paint
- Cold insulation made of synthetic rubber (19 mm), glued on diffusion-proof, with plastic outer jacket (red)
- 8 connection flanges DN 80 (PN 16)
- 2 connection flanges DN 100 (PN 16)
- 1 sleeve G 1½″ (IT) for electric heating element
- 5 sleeves G ½″ (IT) for sensor/thermometer
- 1 sleeve G 1″ (IT) for ventilation
- Perforated separating plate in the central area for separation of the temperature zones
- Flow diversions permanently installed

Delivery
- Cold storage tank mounted with cold insulation (glued on diffusion-proof)

Buffer storage tank - cold storage tank EnerVal G cool (4000,6000)

- Steel buffer storage tank for the hydraulic integration of energy generators, coating with water-based paint
- Cold insulation made of synthetic rubber (19 mm), glued on diffusion-proof, with plastic outer jacket (red)
- 8 connection flanges DN 100 (PN 16)
- 2 connection flanges DN 125 (PN 16)
- 1 sleeve G 1½″ (IT) for electric heating element
- 5 sleeves G ½″ (IT) for sensor/thermometer
- 1 sleeve G 1″ (IT) for ventilation
- Perforated separating plate in the central area for separation of the temperature zones
- Flow diversions permanently installed

Delivery
- Cold storage tank mounted with cold insulation (glued on diffusion-proof)

Buffer storage tank - cold storage tank

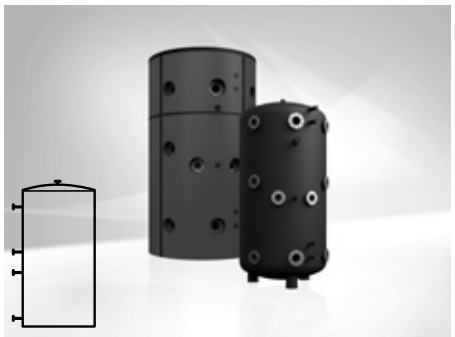

EnerVal G cool (800-6000)
Available from summer 2023

EnerVal G cool (800-6000)

Steel tank raw on the inside
Cold storage tank mounted with cold insulation

EnerVal G cool type	Nominal content l	Part No.
(800)	793	6059 871
(1000)	889	6059 872
(1500)	1440	6059 933
(2500)	2518	6059 934
(4000)	4035	6059 935
(6000)	5849	6059 936

Accessories

Protective tube immersion 6061 045
sleeve set 200 ½", 4 x
For installation of maximum 4 sensors
Nickel-plated brass
Installation length = 187 mm
Outer Ø: 18 mm, inner Ø: 16 mm
including 3 segment springs 90°,
1 Omega clamping spring

Protective tube immersion sleeve SB280 ½" 2018 837
Nickel-plated brass
Installation length = 280 mm
Outer Ø: 9 mm, inner Ø: 7 mm

Thermal insulation for EnerVal G cool
made of polyester fibre fleece
Outer plastic jacket colour red with patented aluminium sealing bracket

Type	Polyester fibre fleece	Part No.
(800)	120 mm	6061 134
(1000)	120 mm	6061 135
(1500)	140 mm	6061 136
(2500)	140 mm	6061 137
(4000)	140 mm	6061 138
(6000)	140 mm	6061 139

Services

Commissioning
Commissioning by works service or Hoval trained authorised serviceman/company is condition for warranty.

For commissioning and other services please contact your Hoval sales office.

EnerVal G cool (800-6000)

Type		(800)	(1000)	(1500)	(2500)	(4000)	(6000)
• Nominal content	l	793	889	1440	2518	4035	5849
• Operating/test pressure	bar	6	6	6	6	6	6
• Minimum operating temperature		5	5	5	5	5	5
• Maximum operating temperature	°C	95	95	95	95	95	95
• Cold insulation synthetic rubber	mm	19	19	19	19	19	19
• Cold insulation λ 0 °C	W/mK	0.033	0.033	0.033	0.033	0.033	0.033
• Cold insulation λ 40 °C	W/mK	0.037	0.037	0.037	0.037	0.037	0.037
• Fire protection class		B-s3,d0	B-s3,d0	B-s3,d0	B-s3,d0	B-s3,d0	B-s3,d0
• Transport weight	kg	171	189	306	468	694	902
• Water vapour diffusion resistance, insulation thickness 25 mm	W/m^2K	≥ 1000	≥ 1000	≥ 1000	≥ 1000	≥ 1000	≥ 1000
• Dimensions		see dimensional drawing					

Velocity into the connection nozzle and inflow velocity with flow diversion

EnerVal G cool (800,1000)

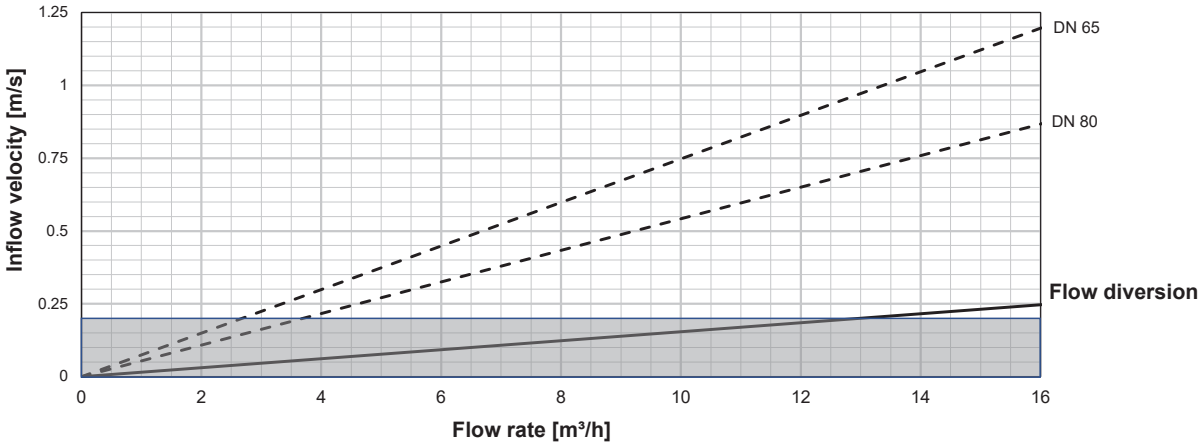

EnerVal G cool (1500-6000)

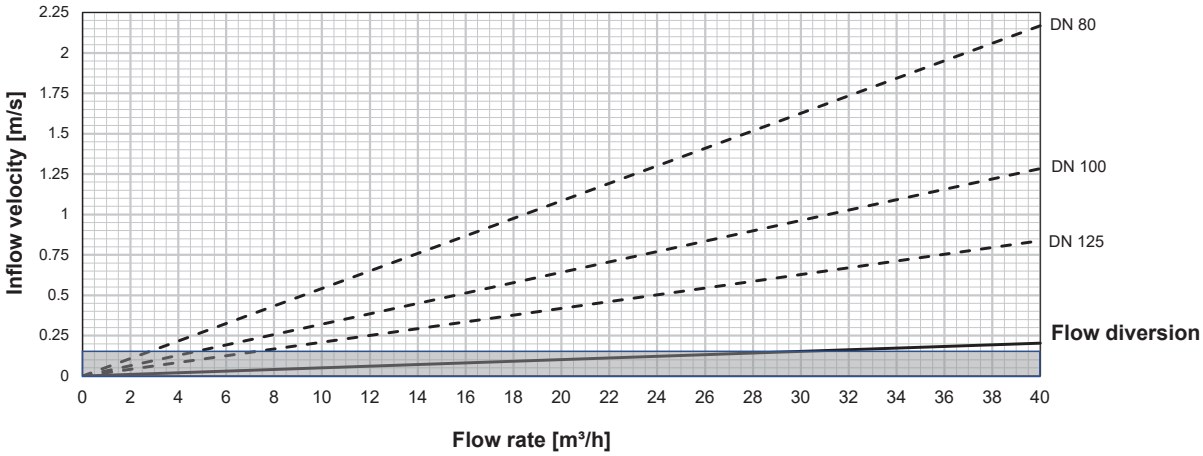

Example of inlet velocity distribution by flow diversions

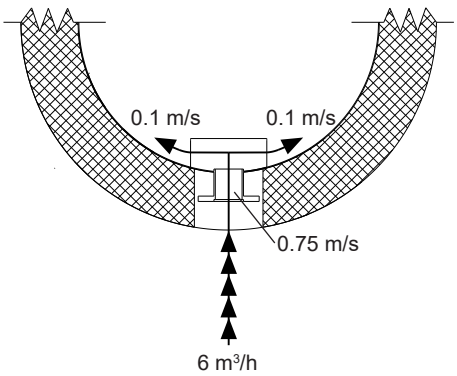

EnerVal G cool (800-6000)

Dimensions incl. cold insulation (series)
(Dimensions in mm)

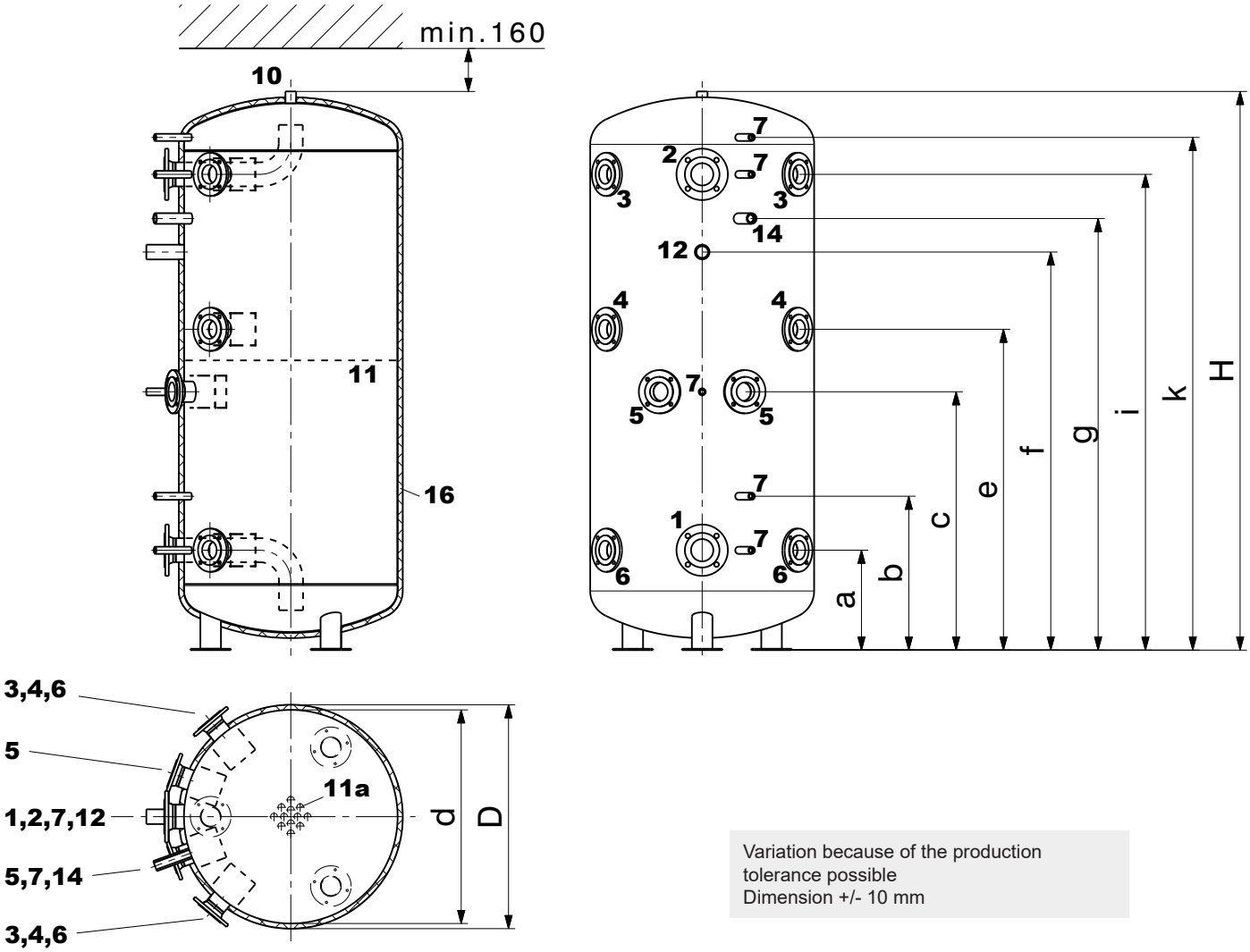

Variation because of the production tolerance possible
Dimension +/- 10 mm

			Type (800,1000)	Type (1500,2500)	Type (4000,6000)
1	Cooling connection	flow discharge (bend pipe)	DN 80, 4 x M16	DN 100, 4 x M16	DN 125, 8 x M16
2	Cooling connection	return discharge (bend pipe)	DN 80, 4 x M16	DN 100, 4 x M16	DN 125, 8 x M16
3	Cold generator connection	return top (inflow restrictor)	DN 65, 4 x M12	DN 80, 4 x M16	DN 100, 4 x M16
4	Cold generator connection	flow top (inflow restrictor)	DN 65, 4 x M12	DN 80, 4 x M16	DN 100, 4 x M16
5	Cold generator connection	return bottom (inflow restrictor)	DN 65, 4 x M12	DN 80, 4 x M16	DN 100, 4 x M16
6	Cold generator connection	flow bottom (inflow restrictor)	DN 65, 4 x M12	DN 80, 4 x M16	DN 100, 4 x M16
7	Sleeve for immersion sleeve, thermostat or thermometer		G ½″ (IT)	G ½″ (IG)	G ½″ (IT)
10	Possible air vent		G 1″ (IT)	G 1″ (IG)	G 1″ (IT)
11	Separating plate				
11a	Holes in the separating plate		12 x	12 x	24 x
12	Connection for electric heating element		G 1½″ (IT)	G 1½″ (IT)	G 1½″ (IT)
14	Connection for circulation lance, **attention:** only for type (800,1000)		G 1″ (IT)		
16	Cold insulation, thickness 19 mm				

EnerVal G cool

type	D	d	H	a	b	c	e	f	g	i	k	Tilting measure
(800)	828	790	1866	327	496	810	1041	1269	1402	1527	1684	1882
(1000)	828	790	2066	369	569	955	1186	1472	1596	1759	1894	2080
(1500)	1028	990	2140	378	549	914	1164	1380	-	1699	1916	2158
(2500)	1288	1250	2448	435	645	1050	1302	1595	-	1903	2211	2475
(4000)	1438	1400	2975	485	780	1386	1638	2227	-	2535	2735	2999
(6000)	1638	1600	3303	523	840	1473	1873	2523	-	2823	3023	3342

EnerVal G cool (800-6000)

Dimensions with thermal insulation (optional)
(Dimensions in mm)

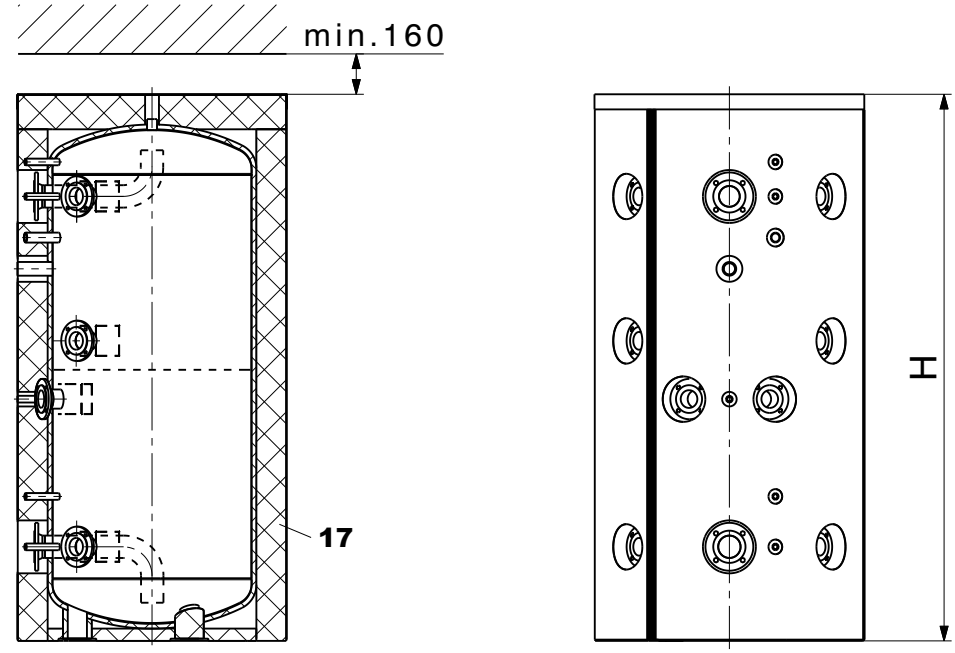

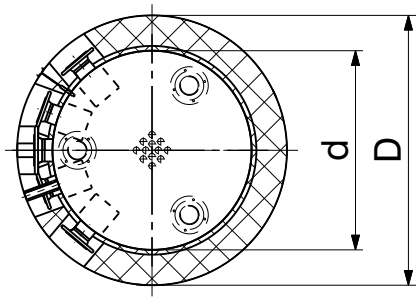

Variation because of the production tolerance possible
Dimension +/- 10 mm

		Type (800,1000)	Type (1500,2500)	Type (4000,6000)
17	Thermal insulation, thickness (in addition to the 19 mm cold insulation)	120 mm	140 mm	140 mm

EnerVal G cool

type	D	d	H
(800)	1068	790	1961
(1000)	1068	790	2161
(1500)	1308	990	2255
(2500)	1568	1250	2563
(4000)	1718	1400	3090
(6000)	1918	1600	3418

VarioVal FLS (800,1000)
Stratified storage tank
(suitable for heat pumps)

Stratified storage tank
- For single family homes with approx. 4-6 persons
- Heating with solar, low-temperature heat generator (heat pumps) or for high-temperature heat generators
- Annual solar coverage rate depends on heat demand, collector field size, collector field storage ratio and location
- Stratified storage tank made of steel, primed on the outside, for heating support
- Water heating via fresh water module (option)
- With built-in plain tube heat exchanger for connection to solar collectors
  (800) up to 10 m² collector surface
  (1000) up to 15 m² collector surface
- Layer installations:
  - Stratification pipe (pipe in pipe)
  - Horizontal baffle plates
  - Vertical baffle plates
  - Guide tubes (bent upwards/downwards) for fresh water module connections
  - Heating flow/return guide tubes (also with return in layer channel)
  - Separating plate in the central area for separation of the temperature zone
- Sensor terminal blocks
- Thermometer (with capillary)
- Thermal insulation
  - Made of polyester fibre fleece 140 mm
  - Outer plastic jacket with patented aluminium sealing bracket, red
  - Insulated cover flap (can be knocked out) for heat exchanger connections

Delivery
Calorifier and thermal insulation completely installed (can be removed for installation)

Design on request
- Heating module HMV20-3BM/SPS-S 8 with thermal insulation box
- Can be expanded with
  - Heating armature group HAV20-3BM-R/SPS-S 8
  - Solar armature group SAV20/SPS-S 7
- Fresh water module
  - TransTherm® aqua FT/FTC:
    For direct storage tank mounting with supplied fixing bolts (not pre-assembled) and connection set
  - TransTherm® aqua F: wall installation (pipework on site)
- Circulation lance
- Screw-in electric heating element

VarioVal FLS | VarioVal FLS incl. TransTherm® aqua FT/FTC

Model range

VarioVal FLS type	Solar heat exchanger m²	dm³
(800)	2	13.4
(1000)	3	18.9

Notice
SPF certificate stratification efficiency SPF-18-009-SE

VarioVal FLS (800,1000) - selection table

		Hydraulic components + necessary TopTronic® E modules								Additional accessories		
		1st mixer circuit	2nd mixer circuit		Solar armature group		Return switching	Buffer management	Fresh water module	Screw-in electric heating element	Electrical box	Circulation heat exchanger lance
		●	opt.		opt.		●	●	●	●	●	opt.
		Consisting of:										
Heat generator		Heating module HMV20-3BM SPS-S 8	HA group HAV20-3BM-R SPS-S 8	TopTronic® E module expansion heating circuit	Solar group SAV20FR SPS-S 7 PM2	TopTronic® E solar module	Stratified charging set SLS32-3-H RL	TopTronic® E buffer module	TransTherm® aqua F TransTherm® aqua FT TransTherm® aqua FTC			
Air/water heat pumps:												
UltraSource® B comfort C	(8,11)	●	●	●	●	●	●		●	●	opt.[2]	opt.
Belaria® pro comfort	(8-15)	●	●	●	●	●	●		●	opt.	opt.[2]	opt.
Belaria® comfort ICM	(8,13)	●	●	●	●	●	●		●	●	opt.[2]	opt.
Brine heat pumps:												
UltraSource® T comfort	(8,13)	●	●	●	●	●	●		●	opt.	opt.[2]	opt.
Thermalia® comfort	(8-13)	●	●	●	●	●	●		●	opt.	opt.[2]	opt.
Thermalia® comfort H	(7,10)	●	●	●	●	●	●		●	opt.	opt.[2]	opt.
TopGas® classic	(12-30)	●	●	●	●	●	[3]	●	●	opt.	opt.[2]	opt.
UltraGas®	(15-35)	●	●	●	●	●		●	●	opt.	opt.[2]	opt.
UltraOil®	(16-35)	●	●	●	●	●		●	●	opt.	opt.[2]	opt.
BioLyt	(13-25)	●	●	●	●	●		●	●	opt.	opt.[1]	opt.

[1] A module expansion or a controller module can be installed in the heat generator.
[2] Two TopTronic® E controller modules can be mounted in the heat generator or in the wall casing. If the storage tank is fully equipped, a separate electrical box must be ordered for an additional module.
[3] Return switching to be installed by the client.

Stratified storage tank

VarioVal FLS (800,1000)

Stratified storage tank made of steel, primed on the outside, for heating support.
Water heating optionally via fresh water module. With built-in plain tube heat exchanger for connection to solar collectors. Thermal insulation made of polyester fibre 140 mm and external plastic coating, colour red. Suitable for heat pumps up to 20 kW (up to 2500 l/h).

VarioVal FLS type	Total volume dm³	Solar heat exchanger m²	Solar heat exchanger dm³	Part No.
(800)	796	2	13.4	6046 238
(1000)	892	3	18.9	6046 239

Electric heating elements
see chapter “Electric heating elements”

Accessories

		Part No.
	**Heating module HMV20-3BM** with pressure distributor for 2 mixer circuits, incl. 1 heating armature group with 3-way motor mixer and pump SPS-S 8 and thermal insulation box	6046 091
	Notice In combination with heat pumps, always use the stratified charging set SLS32-3-H RL.	
	**Heating armature group HAV20-3BM-R** to extend the HMV20-3BM for a second mixer circuit Pump SPS-S 8	6046 092
	**Solar armature group SAV20FR** with PWM interface (TopTronic® E) inc. safety group 6 bar with manometer, FlowRotor and air vent Pump SPS-S 7 PM2	6046 093
	**Layer charge set SLS32-3-H RT** connection set for return switching for direct mounting on VarioVal for heat pumps up to 17 kW Connection set between tank and pressure distributer on heating module, layer charge set with 3-way valve incl. motor drive.	6048 003

Accessories

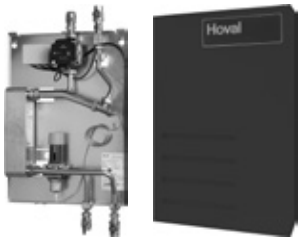

Fresh water module
TransTherm® aqua FT/FTC
Fresh water module for hygienic water heating with thermostatic control of the hot water temperature by means of quick-acting water temperature controller. Incl. red casing and connection set AS20-FW for direct installation on the VarioVal FLS.

Fresh water module TransTherm® aqua	Output kW	Part No.
FT (65)	65	6046 240
FTC (57)	57	6046 241

Accessories for TransTherm® aqua FT/FTC

Circulation heat exchanger lance R 1″ — 2038 434
is screwed into the buffer storage tank and integrated into the circulation line.
Material: Copper, tinned inside
Transmission power approx. 1 kW at 60 °C
Hot water temperature in the buffer storage tank without mixing through the storage tank temperature.
Circulation connections R ½″
Installation length 660 mm

Accessories for TransTherm® aqua F

TransTherm® aqua F
Fully assembled station with plate heat exchanger for the provision of domestic hot water using the continuous flow principle and built-in Hoval TopTronic® E control.
The required buffer storage tank is not supplied.

Fresh water module TransTherm® aqua F	Output kW	Part No.
(6-10)	50	8006 387
(6-16)	90	8006 388

Version with copper-free heat exchanger

Fresh water module TransTherm® aqua F	Output kW	
(6-10)	50	8006 521
(6-16)	90	8006 522

Return switching valve set DN 20
for TransTherm® aqua F (50–90 kW)
Set consisting of temperature sensor, switching valve, drive, seals and screw fittings.

7010 832

Test valve DN 8 G ¼"
for TransTherm® aqua L, F, FS
Test valve suitable for flame treatment for hygienic-microbiologic tests.

2049 861

Sludge separator with magnet
Type: MB3 DN 25 Rp 1″
With variable connection for vertical or horizontal pipelines
Removal of ferromagnetic and non-magnetic dirt and sludge particles from heating or cooling circuits with the medium water or water/glycol (50/50 %)
Brass casing
Sludge separation up to a particle size of 5 µm
With unscrewable casing bottom part for cleaning and inspection work complete with sludge removal tap

Nominal diameter: DN 25
Pipe connection: Rp 1″ internal thread
Installation length: 90 mm
Max. operating pressure: 6 bar
Max. flow temperature: 110 °C
Max. throughput: 2.0 m³/h
Max. flow speed: 1.0 m/s
Max. pressure drop: 3.8 kPa
Contents: 0.36 l
Weight: 2.3 kg

2062 165

Accessories

	Part No.
 **Sludge separator with magnet** Type: MBL DN 32 Rp 1¼″ With variable connection for vertical or horizontal pipelines Performance-enhancing magnetic assistance from removable, external magnet. Fast and continuous removal of ferromagnetic and non-magnetic dirt and sludge particles from heating or cooling circuits with the medium water or water/glycol (50/50 %) Brass casing Sludge separation up to a particle size of 5 micrometres - separation and sludge removal without interrupting operation by the spiral pipe insert With unscrewable casing bottom part for cleaning and inspection work complete with sludge removal tap. Nominal diameter: DN 32 Pipe connection: Rp 1¼″ (internal thread) Installation length: 128 mm Max. operating pressure: 10 bar Max. flow temperature: 110 °C Max. throughput: 3.6 m³/h Max. flow speed: 1.0 m/s Max. pressure drop: 2.2 kPa Contents: 0.75 l Weight: 3.6 kg Type: MBL DN 32 IT	2062 166
 **TopTronic® E control module black with 4.3″ colour touchscreen** For operation of all controller modules connected to the bus system (basic, solar, buffer modules etc.) Connection to the Hoval bus system via RJ45 plug connection or via plug terminals (max. 0.75 mm²), flat design with flexible installation option Installation: - in control panel of the heat generator - in the Hoval wall casing - in the control panel front, black high-gloss cover, customer-specific configurable start screen, Display of current weather or weather forecast (only possible in combination with HovalConnect) Consisting of: - TopTronic® E control module black - Clamping device set control module - RJ45-RAST 5 CAN cable, L = 500	6043 844

Additional sludge separators
see “Various system components”

Notice
Information about engineering, space requirement, dimensioning table, dimensions, see “Hoval TransTherm® aqua F”

TopTronic® E controller modules

	Part No.
  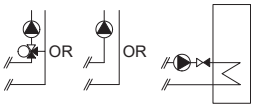 **TopTronic® E heating circuit/hot water module TTE-HK/WW** Controller module for controlling consumers with integrated control functions for: - 1 heating/cooling circuit w/o mixer or - 1 heating/cooling circuit with mixer or - 1 hot water charging circuit - various additional functions Consisting of: - Fitting accessories - 2 x immersion sensor TF/2P/5/6T, L = 5 m - 1 contact sensor ALF/2P/4/T, L = 4 m - Basic plug set for controller module	6034 571
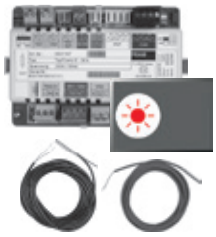 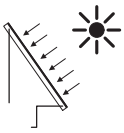 **TopTronic® E solar module TTE-SOL** The controller module is suitable for use as temperature differential control, control of thermal solar plants, for heating process water and/or heating support. Controller module with integrated control functions for - solar circuit - collector cascade - storage tank cascade with up to 4 consumers - consumer loading, with type selection - temperature differential control - loading and unloading function for additional/reserve buffer tank - Integrated solar yield calculation Consisting of: - Fitting accessories - 1 immersion sensor TF/2P/5/6T, L = 5 m - 1 collector sensor TF/1.1P/2.5S/5.5T L = 2.5 m - Basic plug set for controller module	6037 058

Notice
In a standalone application, the control module for operating the solar module and a wall casing must be ordered separately!

Notice
Depending on the complexity, module expansions are required for using the listed functions (max. 2 module expansion can be connected)!

Notice
The supplementary plug set may have to be ordered to implement functions differing from the standard!

TopTronic® E controller modules

	Part No.
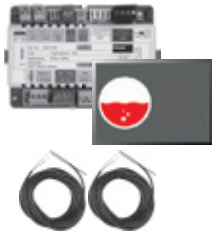 **TopTronic® E buffer module TTE-PS** Controller module with integrated control functions for: - heating buffer management or - cooling buffer management - var. additional functions Consisting of: - Fitting accessories - 2 immersion sensors TF/2P/5/6T L = 5 m - Basic plug set for controller module	6037 057
Notice If the controller module is used without Hoval heat generator then a TopTronic® E control module must be ordered separately!	
Notice Depending on the complexity, module expansions are required for using the listed functions (max. 2 module expansion can be connected)!	
Notice The supplementary plug set may have to be ordered to implement functions differing from the standard!	
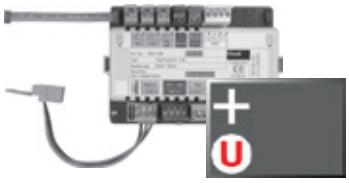 **TopTronic® E module expansion Universal TTE-FE UNI** Expansion to the inputs and outputs of a controller module (basic module heat generator, heating circuit/domestic hot water module, solar module, buffer module) for implementing various functions Consisting of: - Fitting accessories - Plug set FE module	6034 575
Notice Refer to the Hoval System Technology to find which functions and hydraulic arrangements can be implemented.	

Accessories for TopTronic® E

		Part No.
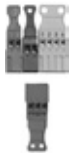	**Supplementary plug set** for controller modules and module expansion TTE-FE HK	6034 503
	**TopTronic® E room control modules** TTE-RBM TopTronic® E room control modules easy white comfort white comfort black	 6037 071 6037 069 6037 070
	**Enhanced language package TopTronic® E** one SD card required per control module Consisting of the following languages: HU, CS, SL, RO, PL, TR, ES, HR, SR, JA, DA	6039 253
	**HovalConnect** HovalConnect LAN HovalConnect WLAN HovalConnect Modbus HovalConnect KNX	 6049 496 6049 498 6049 501 6049 593
	TopTronic® E interface modules GLT module 0-10 V	 6034 578
	**TopTronic® E sensors** AF/2P/K Outdoor sensor H x W x D = 80 x 50 x 28 mm TF/2P/5/6T Immersion sensor, L = 5.0 m ALF/2P/4/T Contact sensor, L = 4.0 m TF/1.1P/2.5S/6T Collector sensor, L = 2.5 m	 2055 889 2055 888 2056 775 2056 776
	**Bivalent switch** for various release or switching functions Bivalent switch 1-piece Bivalent switch 2-piece	 2056 858 2061 826
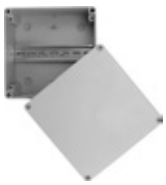	**System housing** System housing 182 mm System housing 254 mm	 6038 551 6038 552
	**TopTronic® E wall casing** WG-190 Wall casing small WG-360 Wall casing medium WG-360 BM Wall casing medium with control module cut-out WG-360-3 BM Wall casing compact with control module cut-out WG-510 Wall casing large WG-510 BM Wall casing large with control module cut-out	 6052 983 6052 984 6052 985 6052 988 6052 986 6052 987

Further information
see “Controls”

Services

Commissioning
Commissioning by works service or Hoval trained authorised serviceman/company is condition for warranty.

For commissioning and other services please contact your Hoval sales office.

Part No.

VarioVal FLS (800,1000)

Type		(800)	(1000)
Storage tank			
• Total volume	dm³	796	892
• Usable volume	dm³	777	872
• Operating pressure/test pressure	bar	3/4.5	3/4.5
• Max. operating temperature	°C	95	95
• Transport weight	kg	228	233
• Dimensions		See Dimensions	
Solar coil (permanently installed)			
• Heating surface	m²	2	3
• Contents	dm³	13.4	18.9
• Operating pressure/test pressure	bar	10/15	10/15
• Max. operating temperature	°C	110	110
• Flow resistance [1] water/glycol 50 % (z-value)		19	25
• Number of collectors (max. - gross at 2.5 m²)	pieces	4	6
• For flat collectors [2] up to approx.	m²	10	15
Thermal insulation			
• Insulation type		PE fibre fleece	PE fibre fleece
• Insulation thickness	mm	140	140
• Fire protection class		B2	B2
• Thermal conductance λ	W/mK	0.038	0.038
• U value	W/(m²K)	0.27	0.27
• Heat loss at 65 °C	W	91	100
• Energy efficiency class		B	B

[1] Flow resistance of heating coil in mbar = flow rate (m³/h)² x z (1 mbar = 0.1 kPa)

[2] Collector surface area, with regard to heat exchanger area only

Performance data

TransTherm® aqua FT/FTC

Hoval TransTherm® aqua FT (65)
Hot water temperature 45 °C: tapping capacity - output - pressure drops

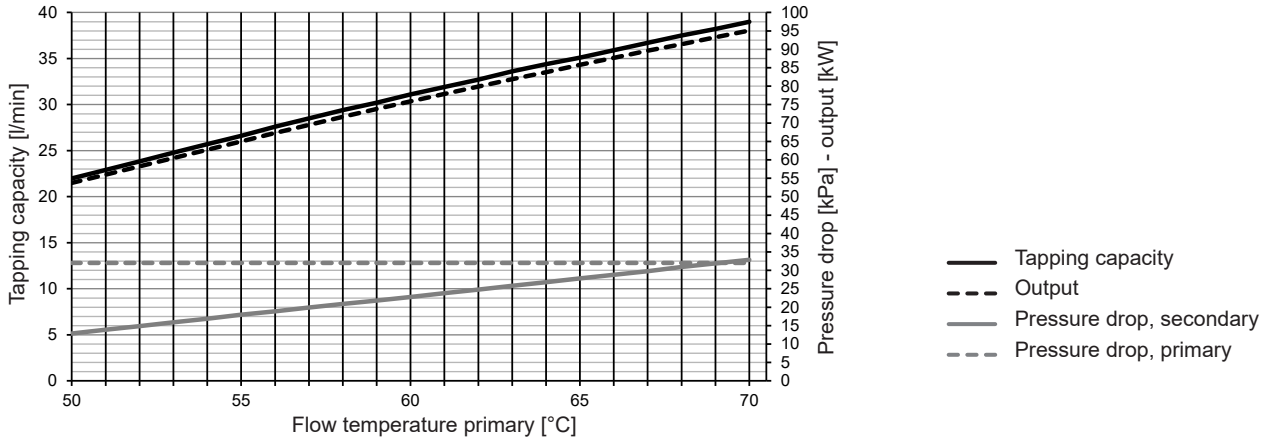

Hoval TransTherm® aqua FTC (57)
Hot water temperature 45 °C: tapping capacity - output - pressure drops

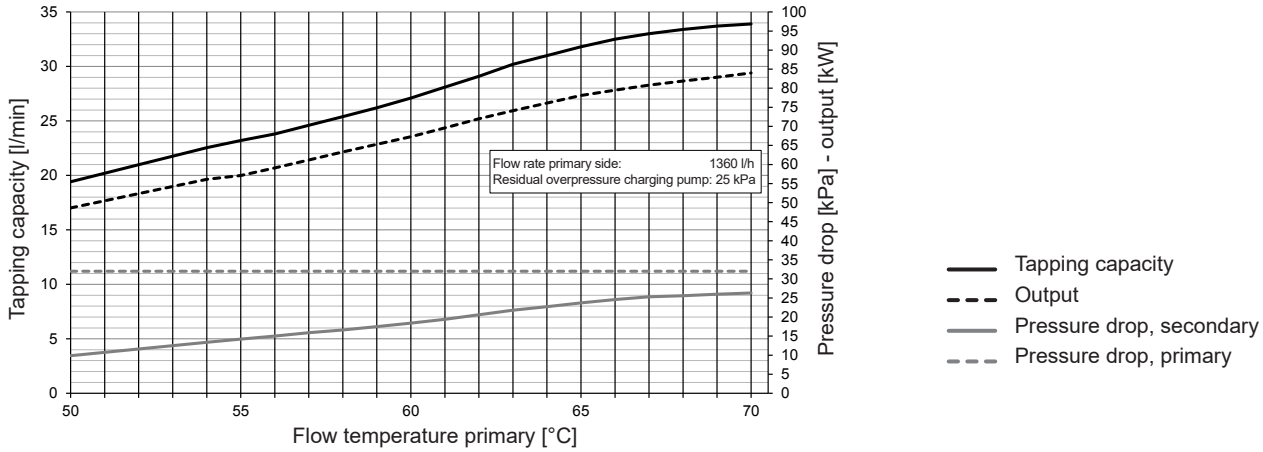

Performance data

TransTherm® aqua F (6-10 up to 6-16)

			Heating water temperature flow							
			55 °C (6-...)		60 °C (6-...)		65 °C (6-...)		70 °C (6-...)	
DHW secondary	**TransTherm® aqua F**		(10)	(16)	(10)	(16)	(10)	(16)	(10)	(16)
60/5 °C	T return primary	°C	-	-	-	-	30	30	30	30
	V̇ primary	**m³/h**	-	-	-	-	**1.08**	**1.88**	**1.32**	**2.09**
	Q max.	kW	-	-	-	-	43	75	60	95
	V̇ secondary	**m³/h**	-	-	-	-	**0.67**	**1.17**	**0.94**	**1.48**
60/10 °C	T return primary	°C	-	-	-	-	30	30	30	30
	V̇ primary	**m³/h**	-	-	-	-	**0.8**	**1.5**	**1.08**	**1.94**
	Q max.	kW	-	-	-	-	32	60	50	90
	V̇ secondary	**m³/h**	-	-	-	-	**0.55**	**1.03**	**0.86**	**1.54**
60/15 °C	T return primary	°C	-	-	-	-	30	30	30	30
	V̇ primary	**m³/h**	-	-	-	-	**0.55**	**1.05**	**0.97**	**1.8**
	Q max.	kW	-	-	-	-	22	42	44	82
	V̇ secondary	**m³/h**	-	-	-	-	**0.42**	**0.8**	**0.84**	**1.57**
60/20 °C	T return primary	°C	-	-	-	-	**30**	**30**	30	30
	V̇ primary	**m³/h**	-	-	-	-	**0.3**	**0.6**	**0.62**	**1.14**
	Q max.	kW	-	-	-	-	12	24	28	52
	V̇ secondary	**m³/h**	-	-	-	-	**0.26**	**0.52**	**0.6**	**1.12**
55/5 °C	T return primary	°C	-	-	30	30	30	30	30	30
	V̇ primary	**m³/h**	-	-	**1.25**	**2.04**	**0.8**	**1.5**	**1.08**	**2.09**
	Q max.	kW	-	-	43	70	32	60	50	95
	V̇ secondary	**m³/h**	-	-	**0.74**	**1.2**	**0.55**	**1.03**	**0.86**	**1.63**
55/10 °C	T return primary	°C	-	-	30	30	30	30	30	30
	V̇ primary	**m³/h**	-	-	**1.11**	**2.04**	**1.3**	**2.06**	**1.08**	**1.87**
	Q max.	kW	-	-	38	70	52	82	49	85
	V̇ secondary	**m³/h**	-	-	**0.73**	**1.34**	**0.99**	**1.57**	**0.94**	**1.62**
55/15 °C	T return primary	°C	-	-	30	30	30	30	30	30
	V̇ primary	**m³/h**	-	-	**0.76**	**1.46**	**0.97**	**1.65**	**1.1**	**1.88**
	Q max.	kW	-	-	26	50	44	75	44	75
	V̇ secondary	**m³/h**	-	-	**0.56**	**1.08**	**0.95**	**1.61**	**0.94**	**1.62**
55/20 °C	T return primary	°C	-	-	30	30	30	30	30	30
	V̇ primary	**m³/h**	-	-	**0.47**	**0.9**	**0.95**	**1.68**	**0.84**	**1.47**
	Q max.	kW	-	-	16	31	38	67	38	67
	V̇ secondary	**m³/h**	-	-	**0.39**	**0.76**	**0.94**	**1.65**	**0.94**	**1.65**
50/5 °C	T return primary	°C	30	30	30	30	30	30	30	30
	V̇ primary	**m³/h**	**1.29**	**2.03**	**1.28**	**2.04**	**1.25**	**2.06**	**1.08**	**1.87**
	Q max.	kW	37	58	44	70	50	82	49	85
	V̇ secondary	**m³/h**	**0.71**	**1.11**	**0.84**	**1.34**	**0.95**	**1.57**	**0.94**	**1.62**
50/10 °C	T return primary	°C	30	30	30	30	30	30	30	30
	V̇ primary	**m³/h**	**1.29**	**2.03**	**1.28**	**2.04**	**1.1**	**1.88**	**0.97**	**1.65**
	Q max.	kW	38	58	44	70	44	75	44	75
	V̇ secondary	**m³/h**	**0.82**	**1.25**	**0.95**	**1.51**	**0.95**	**1.61**	**0.95**	**1.61**
50/15 °C	T return primary	°C	30	30	30	30	30	30	30	30
	V̇ primary	**m³/h**	**1.29**	**2.03**	**1.11**	**1.95**	**0.95**	**1.68**	**0.84**	**1.47**
	Q max.	kW	37	58	38	67	38	67	38	67
	V̇ secondary	**m³/h**	**0.91**	**1.43**	**0.94**	**1.65**	**0.94**	**1.65**	**0.94**	**1.65**
50/20 °C	T return primary	°C	30	30	30	30	30	30	30	30
	V̇ primary	**m³/h**	**1.15**	**2.03**	**0.96**	**1.69**	**0.83**	**1.45**	**0.73**	**1.28**
	Q max.	kW	33	58	33	58	33	58	33	58
	V̇ secondary	**m³/h**	**0.95**	**1.67**	**0.95**	**1.67**	**0.95**	**1.67**	**0.95**	**1.67**
45/5 °C	T return primary	°C	19	18	17	16	16	15	15	13
	V̇ primary	**m³/h**	**0.86**	**1.91**	**0.86**	**1.92**	**0.87**	**1.83**	**0.84**	**1.62**
	Q max.	kW	35	80	42	95	48	104	52	104
	V̇ secondary	**m³/h**	**0.76**	**1.73**	**0.90**	**2.05**	**1.04**	**2.24**	**1.13**	**2.24**
45/10 °C	T return primary	°C	21	21	20	19	19	17	17	16
	V̇ primary	**m³/h**	**0.86**	**1.91**	**0.86**	**1.92**	**0.87**	**1.69**	**0.77**	**1.49**
	Q max.	kW	33	74	39	89	45	91	46	91
	V̇ secondary	**m³/h**	**0.81**	**1.84**	**0.97**	**2.20**	**1.13**	**2.25**	**1.13**	**2.24**
45/15 °C	T return primary	°C	24	23	23	22	21	20	20	19
	V̇ primary	**m³/h**	**0.86**	**1.91**	**0.87**	**1.8**	**0.8**	**1.55**	**0.71**	**1.36**
	Q max.	kW	30	69	37	78	39	78	40	78
	V̇ secondary	**m³/h**	**0.88**	**1.99**	**1.07**	**2.26**	**1.14**	**2.27**	**1.16**	**2.26**
45/20 °C	T return primary	°C	27	26	25	25	24	23	23	23
	V̇ primary	**m³/h**	**0.86**	**1.92**	**0.85**	**1.63**	**0.72**	**1.4**	**0.63**	**1.22**
	Q max.	kW	27	63	33	65	33	66	33	65
	V̇ secondary	**m³/h**	**0.96**	**2.18**	**1.16**	**2.27**	**1.16**	**2.29**	**1.15**	**2.27**

T return primary	°C	Primary return temperature
V̇ primary	**m³/h**	Primary flow rate
Q max.	kW	Output
V̇ secondary	**m³/h**	Secondary flow rate

The specified technical data relates to the full load of the module in each case.

Residual overpressure heating module HMV20-3BM

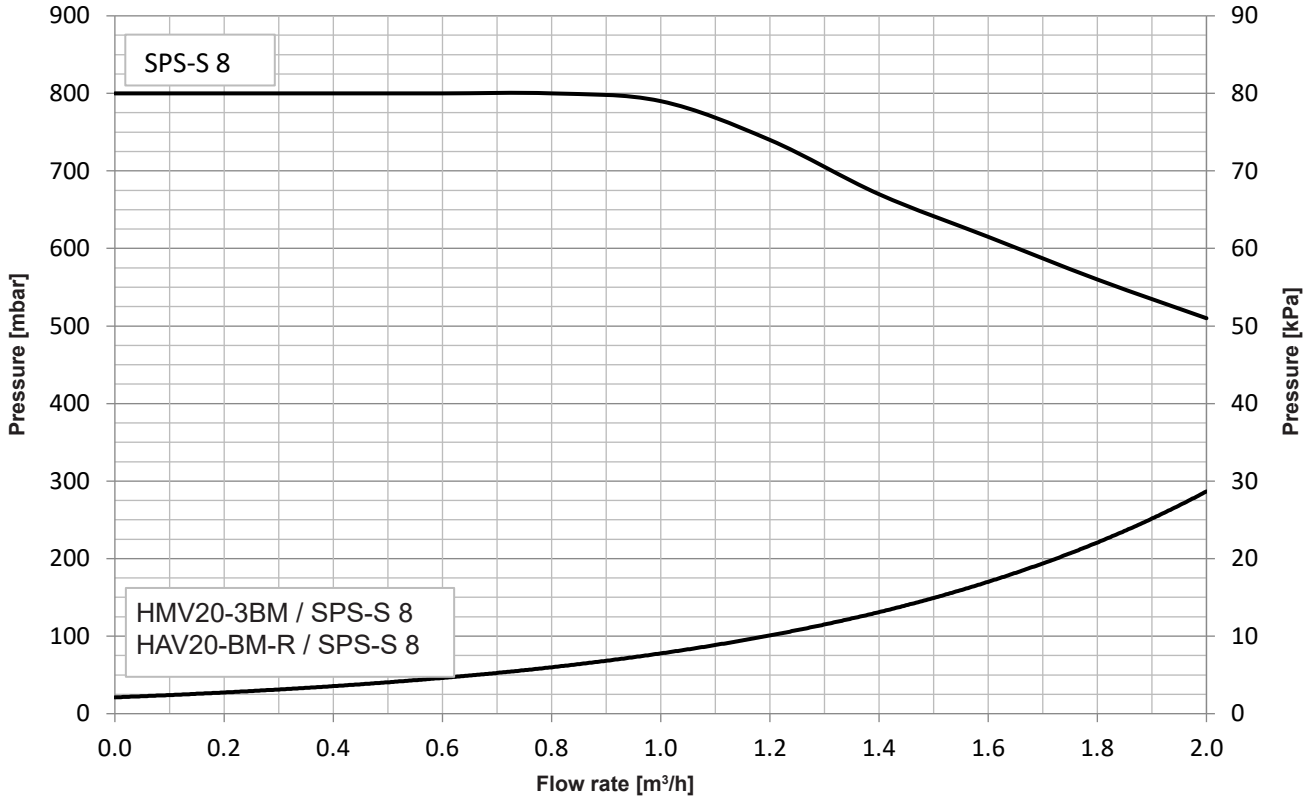

Residual overpressures solar group SAV20

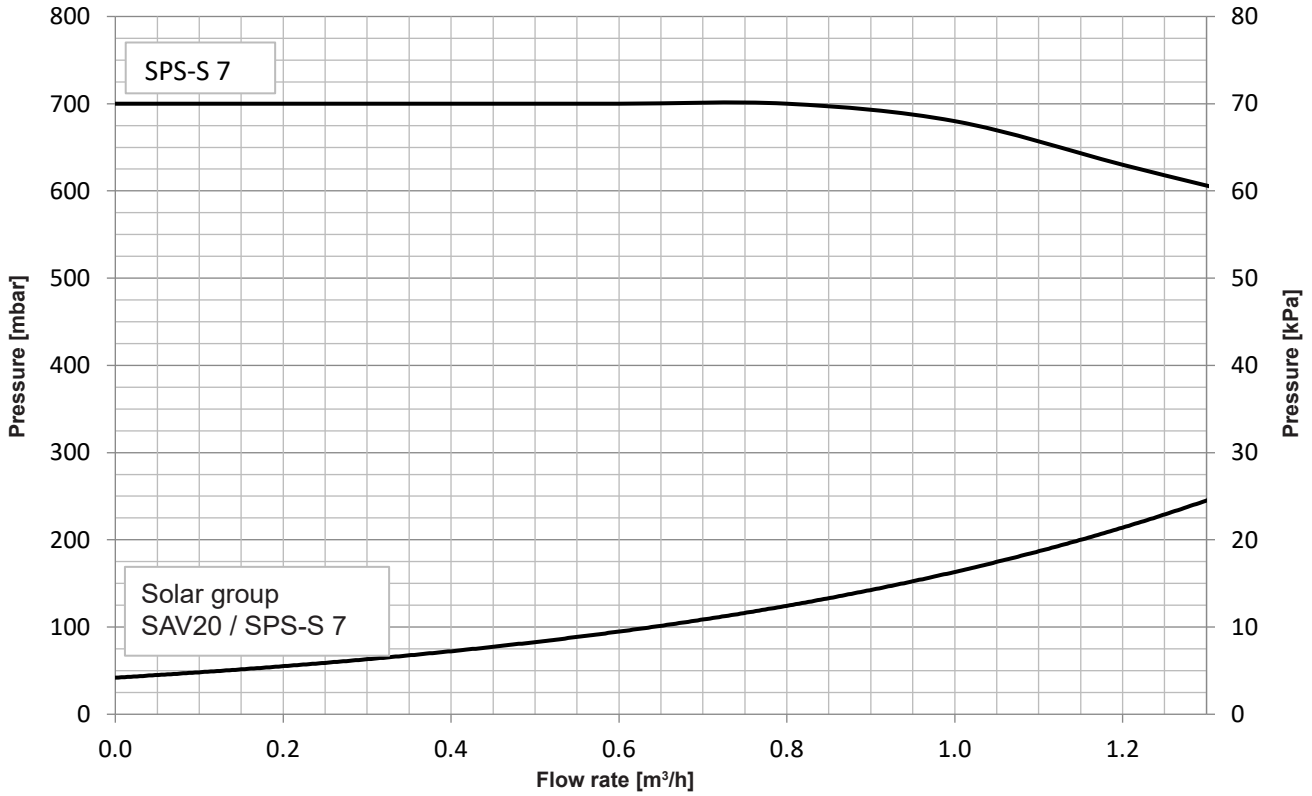

VarioVal FLS (800-1000)

(Dimensions in mm)

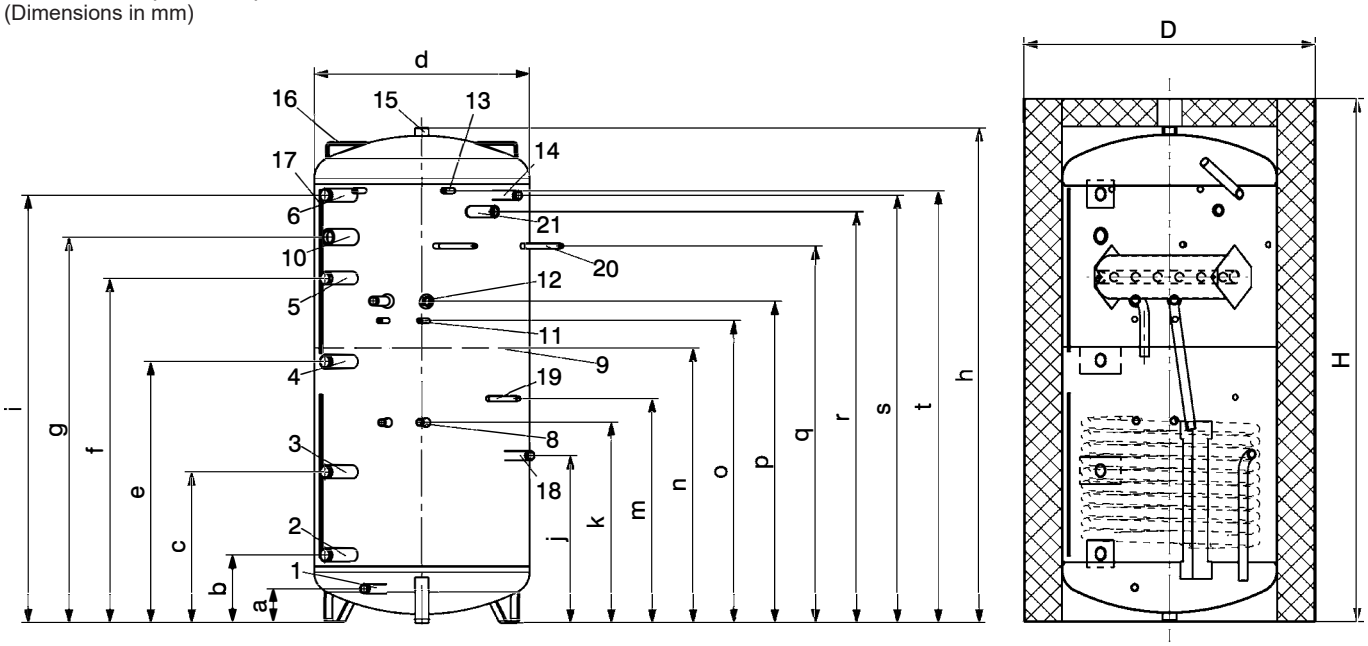

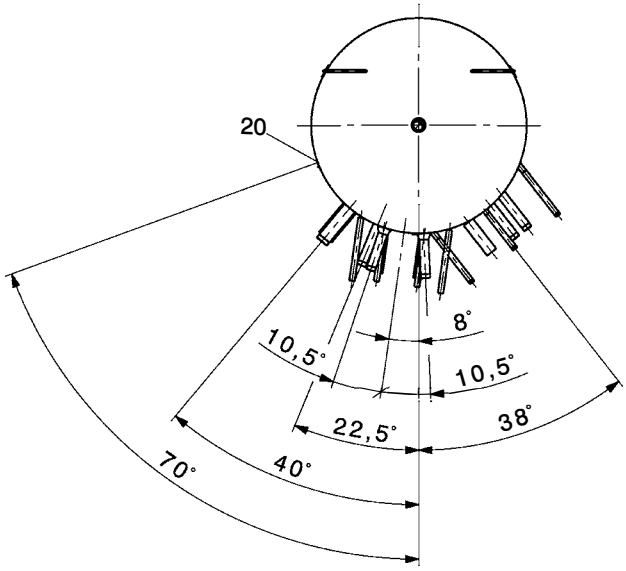

Deviations possible as a result of manufacturing tolerances.
Dimensions +/- 10 mm

1	Drain	G 1″ (ext. thread)
2	Heat generator connection bottom (vertical baffle plate)	G 1½″ (ext. thread)
3	Heat generator connection 2 - bottom (inflow restrictor)	G 1½″ (ext. thread)
4	Heat generator connection middle (inflow restrictor)	G 1½″ (ext. thread)
5	Heat generator connection 2 - top (stratification pipe)	G 1½″ (ext. thread)
6	Heat generator connection top (vertical baffle plate)	G 1½″ (ext. thread)
8	Flow (left) and return (right) solar circuit	G ¾″ (ext. thread)
9	Separating plate	
10	Connection for screw-in electric heating element	Rp 1½″ (int. thread)
11	Fixing bolts bottom left and right for solar group	M10 (int. thread)
12	Flow (left) and return (right) heating	G 1″ (ext. thread)
13	Fixing bolts top left and right for heating group	M10 (int. thread)
14	Connection for fresh water station warm flow	G 1″ (ext. thread)
15	Possible air vent	Rp 1¼″ (int. thread)
16	Carry handle (2 x)	
17	Sensor terminal strip (type (800) 2 x, type (1000) 3 x)	
18	Connection for fresh water station warm cold return	G 1″ (ext. thread)
19	Bolt at bottom for fresh water station	
20	Fixing bolts top left and right for fresh water station	M10 (int. thread)
21	Connection for circulation lance	R 1″ (int. thread)

VarioVal FLS type	D	d	H	h	a	b	c	e	f	g	i	j	k	m	n	o	p	q	r	s	t	Tilting dimension
(800)	1070	790	1919	1816	125	249	554	959	1264	1415	1569	614	736	823	1009	1109	1180	1383	1509	1569	1586	1828
(1000)	1070	790	2119	2016	125	249	554	959	1264	1415	1569	814	870	1023	1009	1243	1314	1583	1709	1769	1720	2030

Space requirements

Installation example - VarioVal FLS
- Heating module HMV20-3B
- HA group HAV20-3BM-R
- Solar group SAV20
- DH module TransTherm® aqua FT (65)

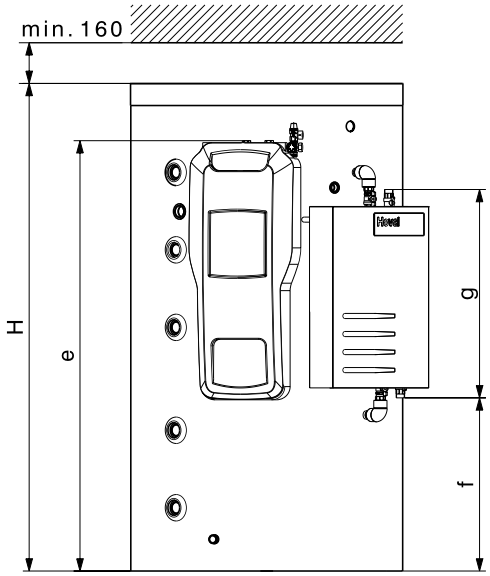

Notices on operation and accessibility
The operating side must be easily accessible. Preferably place heat generator to the left of the storage tank.

Accessibility, left according to heat generator (a):
- Installation and removal of the screw-in electric heating element
- Thermal insulation can be opened to position the sensors in the terminal strips
- Wall clearance, right (c):

Installation of the diaphragm pressure expansion tank
- Removal and installation of the DH module or the hood
- Hot water (domestic water) flow and return

Distance from the ceiling, top:
- Possibly for safety set

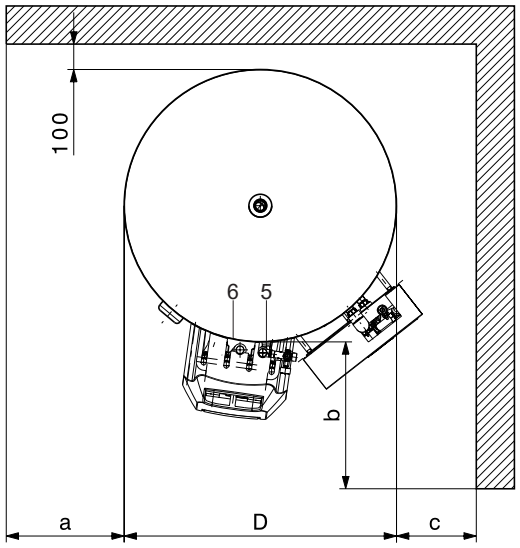

VarioVal FLS	a	b	c	D	e	f	g	H
(800)	≥ 650	≥ 1000	≥ 500	1070	1694	682	820	1919
(1000)	≥ 650	≥ 1000	≥ 500	1070	1828	882	820	2119

Representation without thermal insulating hood and DH module hood

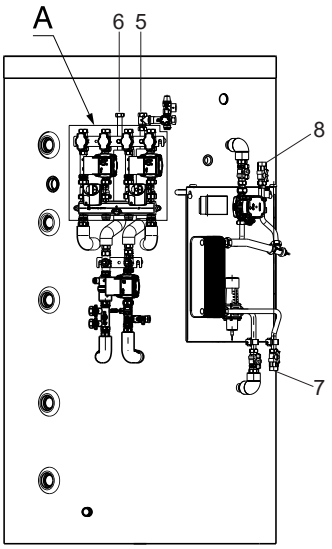

Detail A

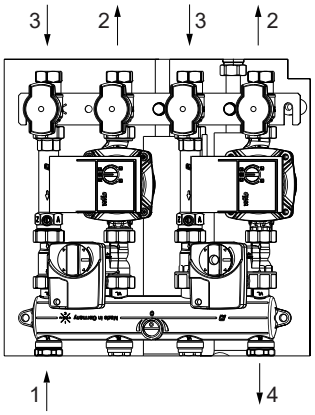

1	Heating flow	G 1″ (ET)
2	Flow heating circuit	Rp ¾″ (IT)
3	Return heating circuit	Rp ¾″ (IT)
4	Heating return	G 1″ (ET)
5	Solar circuit return	G ¾″ (IT)
6	Solar circuit flow	G ¾″ (IT)
7	Cold water	Rp ¾″ (IT)
8	Domestic hot water	Rp ¾″ (IT)

VarioVal RHS (800,1000)

Stratified combination storage tank
- For single family homes with approx. 4-6 persons
- Heating with solar and high-temperature heat generators
- Annual solar coverage rate depends on heat demand, collector field size, collector field storage ratio and location
- Stratified combination storage tank made of steel, primed on the outside, for heating support and water heating with a built-in corrugated pipe heat exchanger
- With built-in plain tube heat exchanger for connection to solar collectors
  (800) up to 10 m² collector surface
  (1000) up to 15 m² collector surface
- Layer installations:
  - Horizontal baffle plates
  - Vertical baffle plates
  - Heating flow/return guide tubes (also with return in layer channel)
- Sensor terminal blocks
- Thermometer (with capillary)
- Thermal insulation
  - Polyester fibre fleece thermal insulation 100 mm
  - Outer plastic jacket with patented aluminium sealing bracket, colour red
  - Insulated cover flap (can be knocked out) for heat exchanger connections

Notice
SPF certificate stratification efficiency SPF-18-009-SE

Domestic hot water calorifier
- Stainless-steel corrugated tube heat exchanger installed

Delivery
Calorifier and thermal insulation completely installed (can be removed for installation)

Design on request
- Heating module HMV20-3BM/SPS-S 8 with thermal insulation box
- Can be expanded with
  - Heating armature group HAV20-3BM-R/SPS-S 8
  - Solar armature group SAV20/SPS-S 7
- Circulation
- Screw-in electric heating element

VarioVal RL (600)

Stratified combination storage tank
- For single family homes with approx. 4-6 persons
- Heating with low-temperature heat generator (heat pumps) or for high-temperature heat generators
- Stratified combination storage tank made of steel, primed on the outside, for heating support and water heating with a built-in corrugated pipe heat exchanger
- Layer installations:
  - Horizontal baffle plates
  - Vertical baffle plates
  - Heating flow/return guide tubes (also with return in layer channel)
  - Separating plate in the central area for separation of the temperature zone
- Sensor terminal blocks
- Thermometer (with capillary)
- Thermal insulation
  - Polyester fibre fleece thermal insulation 140 mm
  - Outer plastic jacket with patented aluminium sealing bracket, colour red
  - Insulated cover flap (can be knocked out) for heat exchanger connections

Domestic hot water calorifier
- Stainless-steel corrugated tube heat exchanger installed

Delivery
- Calorifier and thermal insulation completely installed (can be removed for installation)

Design on request
- Heating module HMV20-3BM/SPS-S 8 with thermal insulation box
- Can be expanded with heating armature group HAV20-3BM-R/SPS-S 8
- Circulation
- Screw-in electric heating element

VarioVal RLS (800-1000)

Stratified combination storage tank
- For single family homes with approx. 4-6 persons
- Heating with solar, low-temperature heat generator (heat pumps) or for high-temperature heat generators
- Annual solar coverage rate depends on heat demand, collector field size, collector field storage ratio and location
- Stratified combination storage tank made of steel, primed on the outside, for heating support and water heating with a built-in corrugated pipe heat exchanger
- With built-in plain tube heat exchanger for connection to solar collectors
  (800) up to 10 m² collector surface
  (1000) up to 15 m² collector surface
- Layer installations:
  - Horizontal baffle plates
  - Vertical baffle plates
  - Heating flow/return guide tubes (also with return in layer channel)
  - Separating plate in the central area for separation of the temperature zone
- Sensor terminal blocks
- Thermometer (with capillary)
- Thermal insulation
  - Made of polyester fibre fleece 140 mm
  - Outer plastic jacket with patented aluminium sealing bracket, colour red
  - Insulated cover flap (can be knocked out) for heat exchanger connections

Domestic hot water calorifier
- Stainless-steel corrugated tube heat exchanger installed

Delivery
Calorifier and thermal insulation completely installed (can be removed for installation)

Design on request
- Heating module HMV20-3BM/SPS-S 8 with thermal insulation box
- Can be expanded with
  - Heating armature group HAV20-3BM-R/SPS-S 8
  - Solar armature group SAV20/SPS-S 7
- Circulation
- Screw-in electric heating element

VarioVal RL (600) - selection table

	Hydraulic components + necessary TopTronic® E modules							Additional accessories		
	1st mixer circuit	2nd mixer circuit		Solar armature group		Return switching	Buffer management	Screw-in electric heating element	Electrical box	Circulation set
	●	opt.				●	●	●	●	opt.
	Consisting of:									
Heat generator	Heating module HMV20-3BM SPS-S 8	HA group HAV20-3BM-R SPS-S 8	TopTronic® E module e●pansion heating circuit	Solar group SAV20FR SPS-S 7 PM2	TopTronic® E solar module	Stratified charging set SLS32-3-H RL	TopTronic® E buffer module			
Air/water heat pumps:										
UltraSource® B comfort C (8,11)	●	●	●			●		●		opt.
Belaria® pro comfort (8-15)	●	●	●			●		opt.		opt.
Belaria® comfort ICM (8,13)	●	●	●			●		●		opt.
Brine heat pumps:										
UltraSource® T comfort (8,13)	●	●	●			●		opt.		opt.
Thermalia® comfort (8-13)	●	●	●			●		opt.		opt.
Thermalia® comfort H (7,10)	●	●	●			●		opt.		opt.
TopGas® classic (12-30)	●	●	●			[3]	●	opt.	opt.[2]	opt.
UltraGas® (15-35)	●	●	●				●	opt.		opt.
UltraOil® (16-35)	●	●	●				●	opt.		opt.
BioLyt (13-23)	●	●	●				●	opt.	opt.[1]	opt.

[1] A module expansion or a controller module can be installed in the heat generator.
[2] Two TopTronic® E controller modules can be mounted in the heat generator or in the wall casing. If the storage tank is fully equipped, a separate electrical box must be ordered for an additional module.
[3] Return switching to be installed by the client

VarioVal RLS (800,1000) - selection table

	Hydraulic components + necessary TopTronic® E modules							Additional accessories		
	1st mixer circuit	2nd mixer circuit		Solar armature group		Return switching	Buffer management	Screw-in Electric heating element	Electrical box	Circulation set
	●	opt.		opt.		●	●	●	●	opt.
	Consisting of:									
Heat generator	Heating module HMV20-3BM SPS-S 8	HA group HAV20-3BM-R SPS-S 8	TopTronic® E module e●pansion heating circuit	Solar group SAV20FR SPS-S 7 PM2	TopTronic® E solar module	Stratified charging set SLS32-3-H RL	TopTronic® E buffer module			
Air/water heat pumps:										
UltraSource® B comfort C (8,11)	●	●	●	●	●	●		●	opt.[2]	opt.
Belaria® pro comfort (8-15)	●	●	●	●	●	●		opt.	opt.[2]	opt.
Belaria® comfort ICM (8,13)	●	●	●	●	●	●		●	opt.[2]	opt.
Brine heat pumps:										
UltraSource® T comfort (8,13)	●	●	●	●	●	●		opt.	opt.[2]	opt.
Thermalia® comfort (8-13)	●	●	●	●	●	●		opt.	opt.[2]	opt.
Thermalia® comfort H (7,10)	●	●	●	●	●	●		opt.	opt.[2]	opt.
TopGas® classic (12-30)	●	●	●	●	●	[3]	●	opt.	opt.[2]	opt.
UltraGas® (15-35)	●	●	●	●	●		●	opt.	opt.[2]	opt.
UltraOil® (16-35)	●	●	●	●	●		●	opt.	opt.[2]	opt.
BioLyt (13-25)	●	●	●	●	●		●	opt.	opt.[1]	opt.

[1] A module expansion or a controller module can be installed in the heat generator.
[2] Two TopTronic® E controller modules can be mounted in the heat generator or in the wall casing. If the storage tank is fully equipped, a separate electrical box must be ordered for an additional module.
[3] Return switching to be installed by the client

VarioVal RHS (800,1000) - selection table

		Hydraulic components + necessary TopTronic® E modules							Additional accessories		
		1st mixer circuit	2nd mixer circuit		Solar armature group		Return switching	Buffer management	Screw-in electric heating element	Electrical box	Circulation set
		●	opt.		opt.			●	opt.	●	opt.
		Consisting of:									
Heat generator		Heating module HMV20-3BM SPS-S 8	HA group HAV20-3BM-R SPS-S 8	TopTronic® E module e●pansion heating circuit	Solar group SAV20FR SPS-S 7 PM2	TopTronic® E solar module	Stratified charging set SLS32-3-H RL	TopTronic® E buffer module			
TopGas® classic	(12-30)	●	●	●	●	●	[3]	●	opt.	opt. [2]	opt.
UltraGas®	(15-35)	●	●	●	●	●		●	opt.	opt. [2]	opt.
UltraOil®	(16-35)	●	●	●	●	●		●	opt.	opt. [2]	opt.
BioLyt	(13-25)	●	●	●	●	●		●	opt.	opt. [1]	opt.

[1] A module expansion or a controller module can be installed in the heat generator.
[2] Two TopTronic® E controller modules can be mounted in the heat generator or in the wall casing. If the storage tank is fully equipped, a separate electrical box must be ordered for an additional module.
[3] Return switching to be installed by the client

Stratified combination storage tank

Hoval VarioVal RHS (800,1000)

Stratified combination storage tank made of steel, primed on the outside, for heating support and water heating with a built-in corrugated pipe heat exchanger.
With built-in plain tube heat exchanger for connection to solar collectors. Thermal insulation made of polyester fibre 100 mm and external plastic coating, colour red.

VarioVal RHS type	Total volume	Solar heat exchanger		Calorifier		Part No.
	dm³	m²	dm³	m²	dm³	
(800)	796	2	18.6	5.5	30.0	6046 236
(1000)	892	3	20.4	6.7	36.3	6046 237

Hoval VarioVal RLS (800,1000)

Stratified combination storage tank made of steel, primed on the outside, for heating support and water heating with a built-in corrugated pipe heat exchanger.
With built-in plain tube heat exchanger for connection to solar collectors. Thermal insulation made of polyester fibre 100 mm and external plastic coating, colour red.
Suitable for heat pumps up to 20 kW (up to 2500 l/h).

VarioVal RHS type	Total volume	Solar heat exchanger		Calorifier		Part No.
	dm³	m²	dm³	m²	dm³	
(800)	796	2	18.6	6.7	36.3	6046 234
(1000)	892	3	20.4	8.2	44.6	6046 235

Hoval VarioVal RL (600)

Stratified combination storage tank made of steel, primed on the outside, for heating support and water heating with a built-in corrugated pipe heat exchanger.
Thermal insulation made of polyester fibre 140 mm and external plastic coating, colour red.
Suitable for heat pumps up to 20 kW (up to 2500 l/h).

VarioVal RL/RLS type	Total volume	Solar heat exchanger		Calorifier		Part No.
	dm³	m²	dm³	m²	dm³	
(600)	647	-	-	6.7	36.3	6046 233

Electric heating elements
see chapter “Electric heating elements”

Accessories

		Part No.
	**Heating module HMV20-3BM** with pressure distributor for 2 mixer circuits, incl. 1 heating armature group with 3-way motor mixer and pump SPS-S 8 and thermal insulation box	6046 091
	Notice In combination with heat pumps, always use the stratified charging set SLS32-3-H RL.	
	**Heating armature group HAV20-3BM-R** to extend the HMV20-3BM for a second mixer circuit Pump SPS-S 8	6046 092
	**Solar armature group SAV20FR** with PWM interface (TopTronic® E) inc. safety group 6 bar with manometer, FlowRotor and air vent Pump SPS-S 7 PM2	6046 093
	**Layer charge set SLS32-3-H RT** connection set for return switching for direct mounting on VarioVal for heat pumps up to 17 kW Connection set between tank and pressure distributer on heating module, layer charge set with 3-way valve incl. motor drive.	6048 003
	Thermal water mixer see “Various system components”	

Accessories

		Part No.
	**Circulation set with reducer** for VarioVal RL, RLS and RHS polyethylene hose (cross-linked) fitting for securing the PE hose Y connection piece made of brass Rp 1″ - Rp 1″ - R ¾″ Reducer made of brass 1″ (ext. thread) - 1¼″ (int. thread)	2055 685
	**TopTronic® E control module black with 4.3″ colour touchscreen** For operation of all controller modules connected to the bus system (basic, solar, buffer modules etc.) Connection to the Hoval bus system via RJ45 plug connection or via plug terminals (max. 0.75 mm²), flat design with flexible installation option Installation: - in control panel of the heat generator - in the Hoval wall casing - in the control panel front, black high-gloss cover, customer-specific configurable start screen, Display of current weather or weather forecast (only possible in combination with HovalConnect) Consisting of: - TopTronic® E control module black - Clamping device set control module - RJ45-RAST 5 CAN cable, L = 500	6043 844

TopTronic® E controller modules

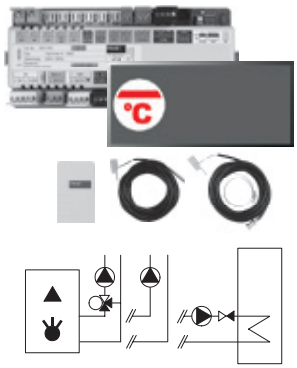

TopTronic® E basic module heat generator TTE-WEZ
Controller module for control of heat generators and the corresponding consumers with integrated control functions for:
- Heat generator management
- Additional heat generator management
- Cascade management
- 1 heating/cooling circuit without mixer
- 1 heating/cooling circuit with mixer
- 1 hot water charging circuit
- var. additional functions

Consisting of:
- Fitting accessories
- 1 outdoor sensor AF/2P/K
- 1 immersion sensor TF/2P/5/6T/S1
L = 5.0 with plug,
- 1 contact sensor ALF/2P/4/T/S1
L = 4.0 m with plug,
- Basic plug set for basic module

Notice
If the basic module is used without Hoval heat generator then a TopTronic® E control module must be ordered separately!

Notice
Depending on the complexity, module expansions are required for using the listed functions (max. 1 module expansion can be connected)!

Notice
The supplementary plug set may have to be ordered to implement functions differing from the standard!

Part No.
6037 053

TopTronic® E controller modules

		Part No.
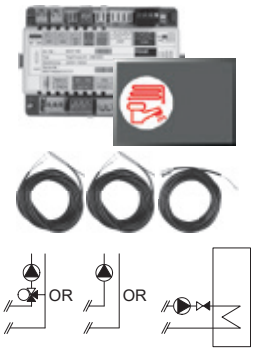	**TopTronic® E heating circuit/hot water module TTE-HK/WW** Controller module for controlling consumers with integrated control functions for: - 1 heating/cooling circuit w/o mixer or - 1 heating/cooling circuit with mixer or - 1 hot water charging circuit - various additional functions Consisting of: - Fitting accessories - 2 x immersion sensor TF/2P/5/6T, L = 5 m - 1 contact sensor ALF/2P/4/T, L = 4 m - Basic plug set for controller module	6034 571
	**TopTronic® E solar module TTE-SOL** The controller module is suitable for use as temperature differential control, control of thermal solar plants, for heating process water and/or heating support. Controller module with integrated control functions for - solar circuit - collector cascade - storage tank cascade with up to 4 consumers - consumer loading, with type selection - temperature differential control - loading and unloading function for additional/reserve buffer tank - Integrated solar yield calculation Consisting of: - Fitting accessories - 1 immersion sensor TF/2P/5/6T, L = 5 m - 1 collector sensor TF/1.1P/2.5S/5.5T L = 2.5 m - Basic plug set for controller module	6037 058

	Part No.
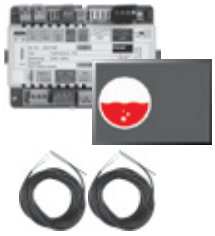 **TopTronic® E buffer module TTE-PS** Controller module with integrated control functions for: - heating buffer management or - cooling buffer management - var. additional functions Consisting of: - Fitting accessories - 2 immersion sensors TF/2P/5/6T L = 5 m - Basic plug set for controller module	6037 057
Notice If the controller module is used without Hoval heat generator then a TopTronic® E control module must be ordered separately!	
Notice Depending on the complexity, module expansions are required for using the listed functions (max. 2 module expansion can be connected)!	
Notice The supplementary plug set may have to be ordered to implement functions differing from the standard!	
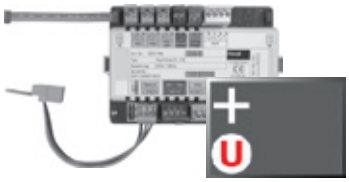 **TopTronic® E module expansion Universal TTE-FE UNI** Expansion to the inputs and outputs of a controller module (basic module heat generator, heating circuit/domestic hot water module, solar module, buffer module) for implementing various functions Consisting of: - Fitting accessories - Plug set FE module	6034 575
Notice Refer to the Hoval System Technology to find which functions and hydraulic arrangements can be implemented.	

Accessories for TopTronic® E

		Part No.
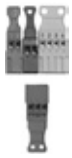	**Supplementary plug set** for controller modules and module expansion TTE-FE HK	6034 503
	**TopTronic® E room control modules** TTE-RBM TopTronic® E room control modules	
	easy white	6037 071
	comfort white	6037 069
	comfort black	6037 070
	**Enhanced language package TopTronic® E** one SD card required per control module Consisting of the following languages: HU, CS, SL, RO, PL, TR, ES, HR, SR, JA, DA	6039 253
	**HovalConnect**	
	HovalConnect LAN	6049 496
	HovalConnect WLAN	6049 498
	HovalConnect Modbus	6049 501
	HovalConnect KNX	6049 593
	TopTronic® E interface modules	
	GLT module 0-10 V	6034 578
	**TopTronic® E sensors**	
	AF/2P/K Outdoor sensor H x W x D = 80 x 50 x 28 mm	2055 889
	TF/2P/5/6T Immersion sensor, L = 5.0 m	2055 888
	ALF/2P/4/T Contact sensor, L = 4.0 m	2056 775
	TF/1.1P/2.5S/6T Collector sensor, L = 2.5 m	2056 776
	**Bivalent switch** for various release or switching functions	
	Bivalent switch 1-piece	2056 858
	Bivalent switch 2-piece	2061 826
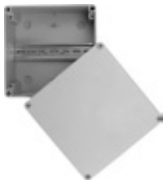	**System housing**	
	System housing 182 mm	6038 551
	System housing 254 mm	6038 552
	**TopTronic® E wall casing**	
	WG-190 Wall casing small	6052 983
	WG-360 Wall casing medium	6052 984
	WG-360 BM Wall casing medium with control module cut-out	6052 985
	WG-360-3 BM Wall casing compact with control module cut-out	6052 988
	WG-510 Wall casing large	6052 986
	WG-510 BM Wall casing large with control module cut-out	6052 987

Further information
see “Controls”

Services

Commissioning
Commissioning by works service or Hoval trained authorised serviceman/company is condition for warranty.

For commissioning and other services please contact your Hoval sales office.

Part No.

VarioVal RHS (800,1000)
VarioVal RL (600), VarioVal RLS (800,1000)

Type		RHS (800)	RHS (1000)	RL (600)	RLS (800)	RLS (1000)
Storage tank						
• Total volume	dm³	796	892	647	796	892
• Usable volume	dm³	747	835	611	741	827
• Operating pressure/test pressure	bar	3/4.5	3/4.5	3/4.5	3/4.5	3/4.5
• Max. operating temperature	°C	95	95	95	95	95
• Transport weight	kg	213	234	179	226	255
• Dimensions				See Dimensions		
Domestic/hot water (corrugated pipe firmly installed)						
• Heating surface	m²	5.5	6.7	6.7	6.7	8.2
• Contents	dm³	30.0	36.3	36.3	36.3	44.6
• Operating pressure/test pressure	bar	6/10	6/10	6/10	6/10	6/10
• Max. operating temperature	°C	95	95	95	95	95
• Flow resistance [1] water (z-value)		46	56	56	56	69
• Performance figure NL [2]	NL	1.6	2.1	1.4	1.7	2.4
Solar/coil (permanently installed)						
• Heating surface	m²	2	3	-	2	3
• Contents	dm³	13.4	18.9	-	13.4	18.9
• Operating pressure/test pressure	bar	10/15	10/15	-	10/15	10/15
• Max. operating temperature	°C	110	110	-	110	110
• Flow resistance [1] water/glycol 50 % (z-value)		19	25	-	19	25
• Number of collectors (max. - gross at 2.5 m²)	pieces	4	6	-	4	6
• For flat plate collector [3] up to approx.	m²	10	15	-	10	15
Thermal insulation						
• Insulation type				PE fibre fleece		
• Insulation thickness	mm	100	100	140	140	140
• Fire protection class		B2	B2	B2	B2	B2
• Thermal conductance λ	W/mK	0.038	0.038	0.038	0.038	0.038
• U value		0.4	0.4	0.27	0.27	0.27
• Heat loss at 65 °C	W	120	128	80	91	100
• Energy efficiency class		C	C	B	B	B

[1] Flow resistance in mbar = flow rate (m³/h)² x z (1 mbar = 0.1 kPa)

[2] Performance figure NL with hot water 10/45 °C, stocking 50 % with 60 °C / 50 % with 30 °C, without supplemental heating

[3] Collector surface area, with regard to heat exchanger area only

Hot water outputs 45 °C

Heating function with heat generator, heating flow 50 °C

Domestic water: 10 °C/45 °C

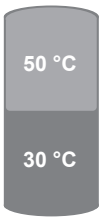

Output capacity/tapping capacity/fitting flow rate 10 l/min

Supplemental heating output [kW]	Tapping volume [l/h]				
	VarioVal RHS		VarioVal RL	VarioVal RLS	
	800	1000	600	800	1000
0			110	140	180
5			140	170	230
10			190	230	300
15			290	360	470
20			540	600	600
25			600	600	600
30			600	600	600
35			600	600	600

Output capacity/tapping capacity/fitting flow rate 15 l/min

Supplemental heating output [kW]	Tapping volume [l/h]				
	VarioVal RHS		VarioVal RL	VarioVal RLS	
	800	1000	600	800	1000
0			60	70	110
5			70	90	130
10			90	100	150
15			110	130	190
20			140	170	240
25			200	240	340
30			320	380	540
35			590	690	900

Heating function with heat generator, heating flow 55 °C

Domestic water: 10 °C/45 °C

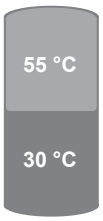

Output capacity/tapping capacity/fitting flow rate 10 l/min

Supplemental heating output [kW]	Tapping volume [l/h]				
	VarioVal RHS		VarioVal RL	VarioVal RLS	
	800	1000	600	800	1000
0	220	270	180	230	280
5	280	340	230	290	360
10	370	460	310	400	480
15	570	600	480	540	600
20	600	600	600	600	600
25	600	600	600	600	600
30	600	600	600	600	600
35	600	600	600	600	600

Output capacity/tapping capacity/fitting flow rate 15 l/min

Supplemental heating output [kW]	Tapping volume [l/h]				
	VarioVal RHS		VarioVal RL	VarioVal RLS	
	800	1000	600	800	1000
0	150	190	130	170	210
5	170	220	150	190	250
10	200	260	180	230	300
15	250	320	220	280	370
20	330	420	280	360	480
25	470	590	400	520	670
30	700	900	600	800	900
35	900	900	900	900	900

Output capacity/tapping capacity/fitting flow rate 20 l/min

Supplemental heating output [kW]	Tapping volume [l/h]				
	VarioVal RHS		VarioVal RL	VarioVal RLS	
	800	1000	600	800	1000
0	80	110	70	100	150
5	90	120	80	110	160
10	100	140	90	120	190
15	110	160	110	140	210
20	130	190	130	170	250
25	160	230	150	200	300
30	200	300	190	260	380
35	270	400	260	340	520

Heating function with heat generator, heating flow 60 °C

Domestic water: 10 °C/45 °C

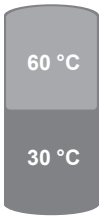

Output capacity/tapping capacity/fitting flow rate 10 l/min

Supplemental heating output [kW]	Tapping volume [l/h]				
	VarioVal RHS		VarioVal RL	VarioVal RLS	
	800	1000	600	800	1000
0	290	350	240	310	370
5	360	440	310	390	470
10	490	600	420	520	570
15	600	600	600	600	600
20	600	600	600	600	600
25	600	600	600	600	600
30	600	600	600	600	600
35	600	600	600	600	600

Output capacity/tapping capacity/fitting flow rate 15 l/min

Supplemental heating output [kW]	Tapping volume [l/h]				
	VarioVal RHS		VarioVal RL	VarioVal RLS	
	800	1000	600	800	1000
0	220	280	190	240	300
5	250	320	220	280	350
10	300	380	260	330	410
15	370	480	320	410	510
20	480	620	420	530	660
25	690	880	580	740	800
30	900	900	900	900	900
35	900	900	900	900	900

Output capacity/tapping capacity/fitting flow rate 20 l/min

Supplemental heating output [kW]	Tapping volume [l/h]				
	VarioVal RHS		VarioVal RL	VarioVal RLS	
	800	1000	600	800	1000
0	160	220	130	170	230
5	180	240	150	190	260
10	200	270	170	220	290
15	230	310	190	250	340
20	270	370	230	290	400
25	320	440	280	350	480
30	400	560	350	440	600
35	540	740	460	590	800

Heating function with heat generator, heating flow 65 °C

Domestic water: 10 °C/45 °C

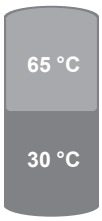

Output capacity/tapping capacity/fitting flow rate 10 l/min

Supplemental heating output [kW]	Tapping volume [l/h]				
	VarioVal RHS		VarioVal RL	VarioVal RLS	
	800	1000	600	800	1000
0	360	430	300	380	450
5	450	550	380	480	570
10	550	600	510	580	600
15	600	600	600	600	600
20	600	600	600	600	600
25	600	600	600	600	600
30	600	600	600	600	600
35	600	600	600	600	600

Output capacity/tapping capacity/fitting flow rate 15 l/min

Supplemental heating output [kW]	Tapping volume [l/h]				
	VarioVal RHS		VarioVal RL	VarioVal RLS	
	800	1000	600	800	1000
0	290	360	250	310	380
5	330	420	290	360	440
10	400	500	340	430	520
15	490	610	420	530	650
20	640	800	540	690	840
25	900	900	770	820	900
30	900	900	900	900	900
35	900	900	900	900	900

Output capacity/tapping capacity/fitting flow rate 20 l/min

Supplemental heating output [kW]	Tapping volume [l/h]				
	VarioVal RHS		VarioVal RL	VarioVal RLS	
	800	1000	600	800	1000
0	220	290	190	250	320
5	250	330	210	280	350
10	280	370	240	320	400
15	320	430	280	360	460
20	380	500	330	430	540
25	460	600	400	520	650
30	580	750	500	650	820
35	780	1000	650	850	1000

Hot water outputs 60 °C

Heating function with heat generator, heating flow 65 °C

Domestic water: 10 °C/60 °C

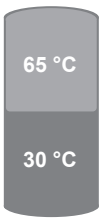

Output capacity/tapping capacity/fitting flow rate 10 l/min

Supplemental heating output [kW]	Tapping volume [l/h]				
	VarioVal RHS		VarioVal RL	VarioVal RLS	
	800	1000	600	800	1000
0	70	110	70	90	130
5	90	140	90	120	160
10	130	180	120	160	210
15	200	280	190	240	330
20	380	540	370	470	570
25	600	600	600	600	600
30	600	600	600	600	600
35	600	600	600	600	600

Output capacity/tapping capacity/fitting flow rate 15 l/min

Supplemental heating output [kW]	Tapping volume [l/h]				
	VarioVal RHS		VarioVal RL	VarioVal RLS	
	800	1000	600	800	1000
0	30	60	35	50	70
5	35	70	40	60	85
10	40	80	50	70	100
15	50	100	60	90	130
20	60	130	70	110	170
25	90	180	110	160	240
30	140	290	170	260	380
35	250	530	310	470	650

Heating function with heat generator, heating flow 65 °C

Domestic water: 10 °C/60 °C

Output capacity/tapping capacity/fitting flow rate 10 l/min

Supplemental heating output [kW]	Tapping volume [l/h]				
	VarioVal RHS		VarioVal RL	VarioVal RLS	
	800	1000	600	800	1000
0	40	70	40	60	80
5	50	90	50	70	100
10	60	120	70	100	140
15	100	180	100	150	220
20	190	340	200	300	420
25	490	600	500	600	600
30	600	600	600	600	600
35	600	600	600	600	600

Output capacity/tapping capacity/fitting flow rate 15 l/min

Supplemental heating output [kW]	Tapping volume [l/h]				
	VarioVal RHS		VarioVal RL	VarioVal RLS	
	800	1000	600	800	1000
0	30	35	35	35	40
5	30	35	35	35	50
10	30	40	35	40	60
15	30	50	35	50	80
20	30	70	40	70	100
25	30	100	50	100	150
30	40	160	60	150	240
35	80	300	100	280	430

Heating function with heat generator, heating flow 70 °C

Domestic water: 10 °C/60 °C

Output capacity/tapping capacity/fitting flow rate 10 l/min

Supplemental heating output [kW]	Tapping volume [l/h]				
	VarioVal RHS		VarioVal RL	VarioVal RLS	
	800	1000	600	800	1000
0	80	120	70	90	130
5	100	150	90	120	160
10	140	200	130	160	220
15	210	310	190	240	340
20	410	590	370	470	600
25	600	600	600	600	600
30	600	600	600	600	600
35	600	600	600	600	600

Output capacity/tapping capacity/fitting flow rate 15 l/min

Supplemental heating output [kW]	Tapping volume [l/h]				
	VarioVal RHS		VarioVal RL	VarioVal RLS	
	800	1000	600	800	1000
0	30	70	35	40	80
5	30	80	40	50	90
10	40	100	50	60	110
15	50	120	60	70	140
20	70	160	80	100	180
25	100	220	110	140	260
30	170	350	180	220	420
35	300	600	330	400	750

Residual overpressure heating module HMV20-3BM

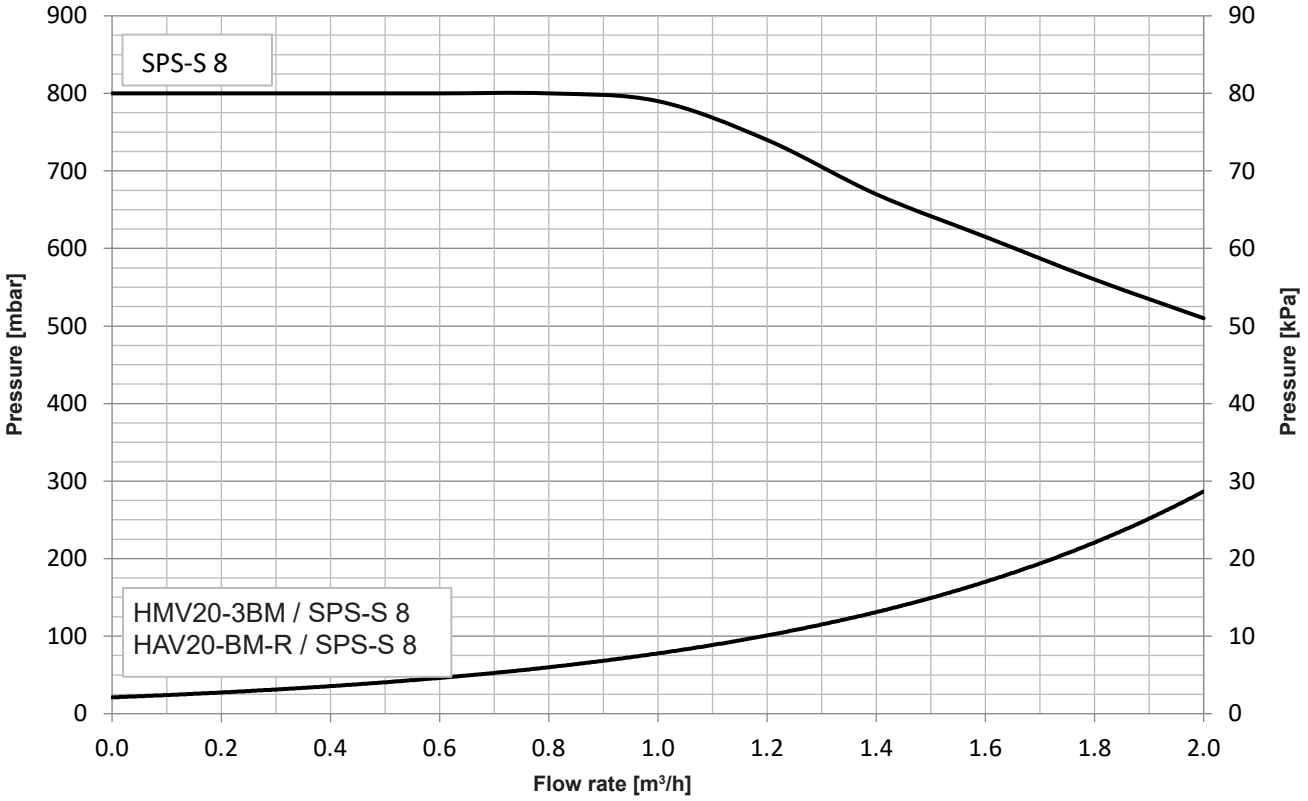

Residual overpressures solar group SAV20

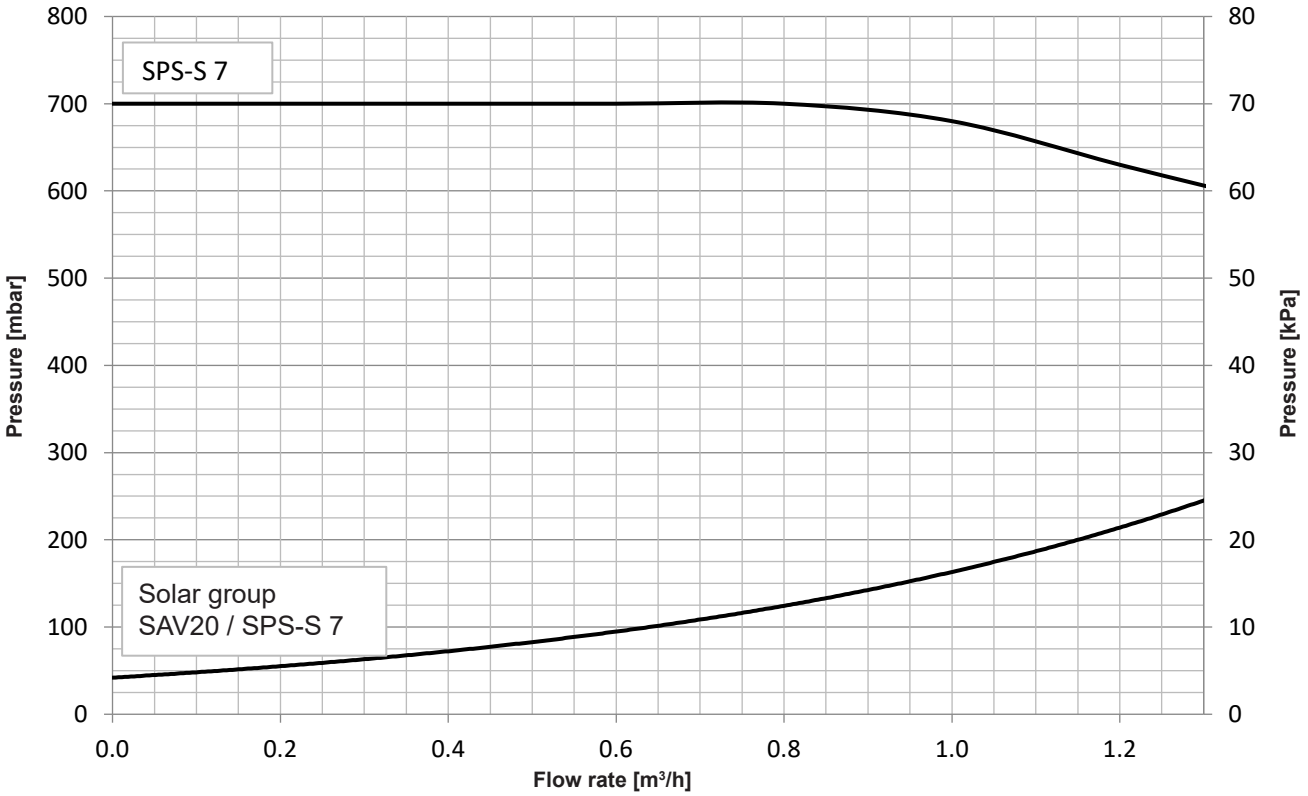

VarioVal RHS (800,1000)

(Dimensions in mm)

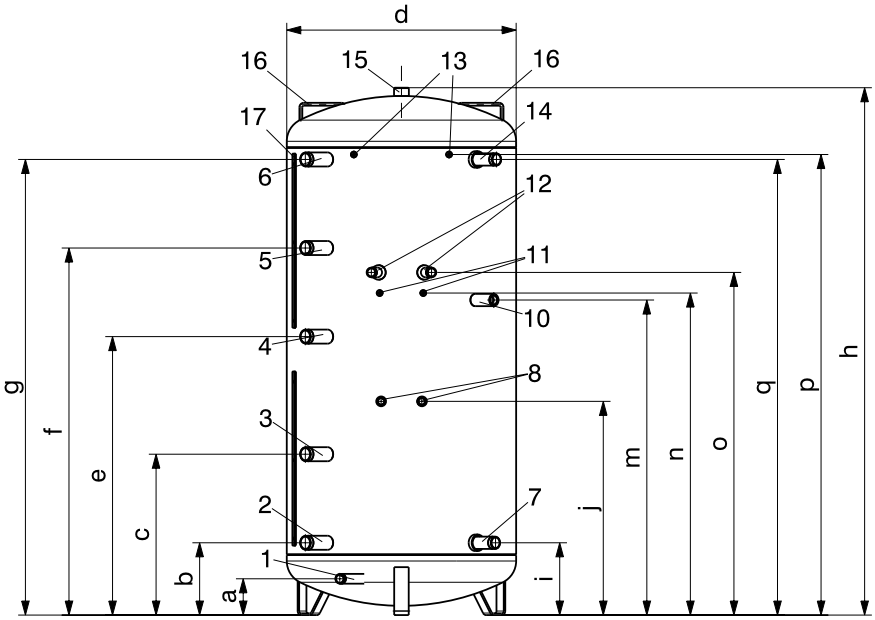

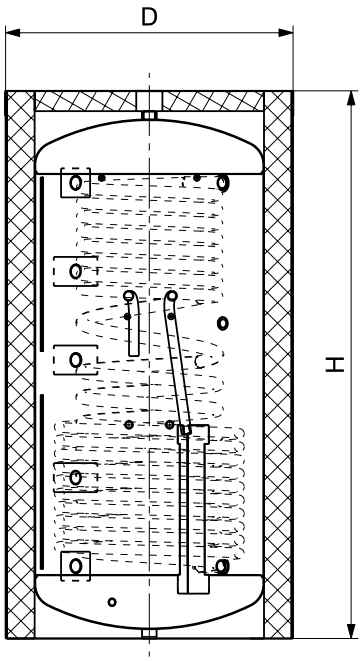

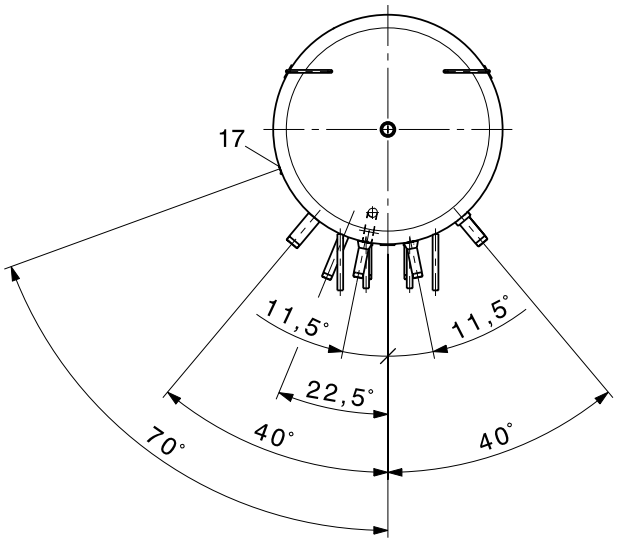

1	Drain	G 1″ (ext. thread)
2	Heat generator connection bottom (vertical baffle plate)	G 1½″ (ext. thread)
3	Heat generator connection 2 - bottom (inflow restrictor)	G 1½″ (ext. thread)
4	Heat generator connection middle (inflow restrictor)	G 1½″ (ext. thread)
5	Heat generator connection 2 - top (single-layer pipe)	G 1½″ (ext. thread)
6	Heat generator connection top (vertical baffle plate)	G 1½″ (ext. thread)
7	Domestic water cold (corrugated pipe)	R 1¼″ (ext. thread)
8	Flow (left) and return (right) solar circuit	G ¾″ (ext. thread)
10	Connection for screw-in electric heating element	Rp 1½″ (int. thread)
11	Fixing bolts bottom left and right (heating module)	M10 (int. thread)
12	Flow (left) and return (right) heating	G 1″ (ext. thread)
13	Fixing bolts top left and right (heating module)	M10 (int. thread)
14	Domestic water hot (corrugated pipe)	R 1¼″ (ext. thread)
15	Possible air vent	Rp 1¼″ (int. thread)
16	Carry handle (2 x)	
17	Sensor terminal strip (type (800) 2 x, type (1000) 3 x)	

Deviations possible as a result of manufacturing tolerances.
Dimensions +/- 10 mm

VarioVal RHS type	D	d	H	h	a	b	c	e	f	g	i	j	m	n	o	p	q	Tilting dimension
(800)	990	790	1886	1816	125	249	554	959	1264	1569	249	736	1085	1109	1180	1586	1569	1828
(1000)	990	790	2086	2016	125	249	554	959	1264	1569	249	870	1085	1243	1314	1720	1769	2030

VarioVal RL (600)

(Dimensions in mm)

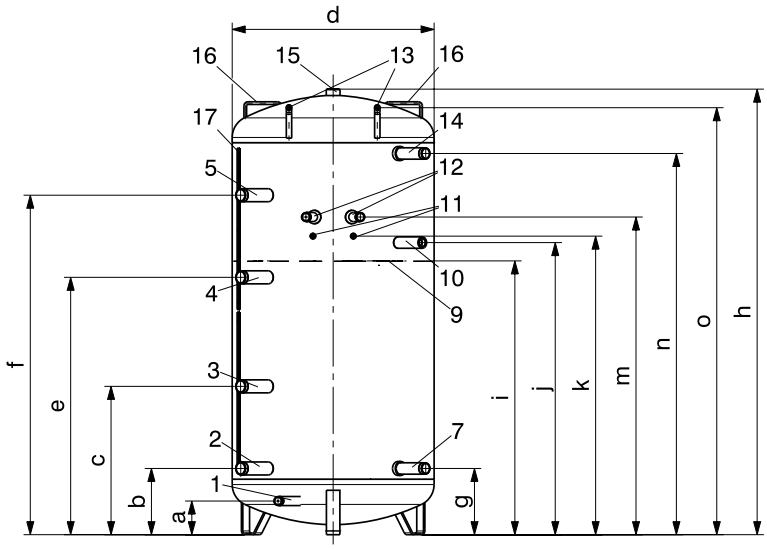

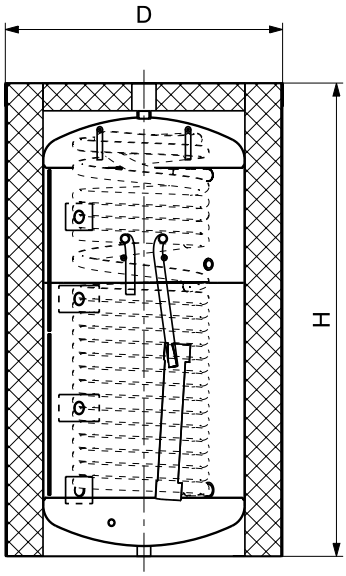

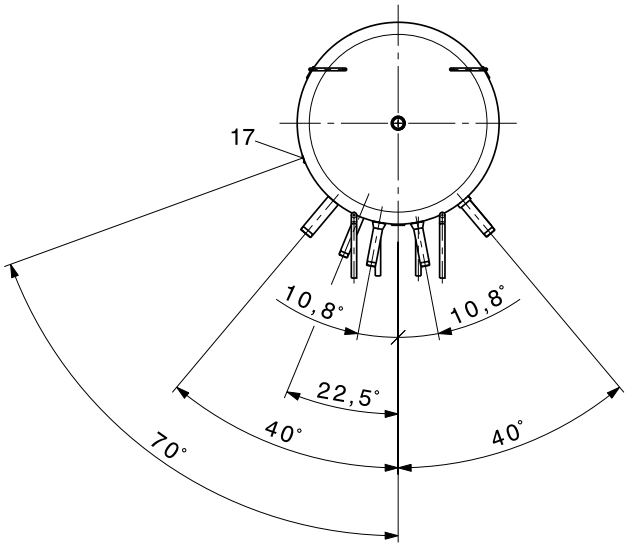

1	Drain	G 1″ (ext. thread)
2	Heat generator connection bottom (vertical baffle plate)	G 1½″ (ext. thread)
3	Heat generator connection 2 - bottom (inflow restrictor)	G 1½″ (ext. thread)
4	Heat generator connection middle (inflow restrictor)	G 1½″ (ext. thread)
5	Heat generator connection 2 - top (single-layer pipe)	G 1½″ (ext. thread)
7	Domestic water cold (corrugated pipe)	R 1¼″ (ext. thread)
9	Separating plate	
10	Connection for screw-in electric heating element	Rp 1½″ (int. thread)
11	Fixing bolts bottom left and right (heating module)	M10 (int. thread)
12	Flow (left) and return (right) heating	G 1″ (ext. thread)
13	Fixing bolts top left and right (heating module)	M10 (int. thread)
14	Domestic water hot (corrugated pipe)	R 1¼″ (ext. thread)
15	Possible air vent	Rp 1¼″ (int. thread)
16	Carry handle (2 x)	
17	Sensor terminal bar (2 x)	

Deviations possible as a result of manufacturing tolerances.
Dimensions +/- 10 mm

VarioVal RL type	D	d	H	h	a	b	c	e	f	g	i	j	k	m	n	o	Tilting dimension
(600)	1030	750	1758	1655	125	246	551	956	1261	246	1017	1085	1109	1180	1416	1586	1670

VarioVal RLS (800,1000)

(Dimensions in mm)

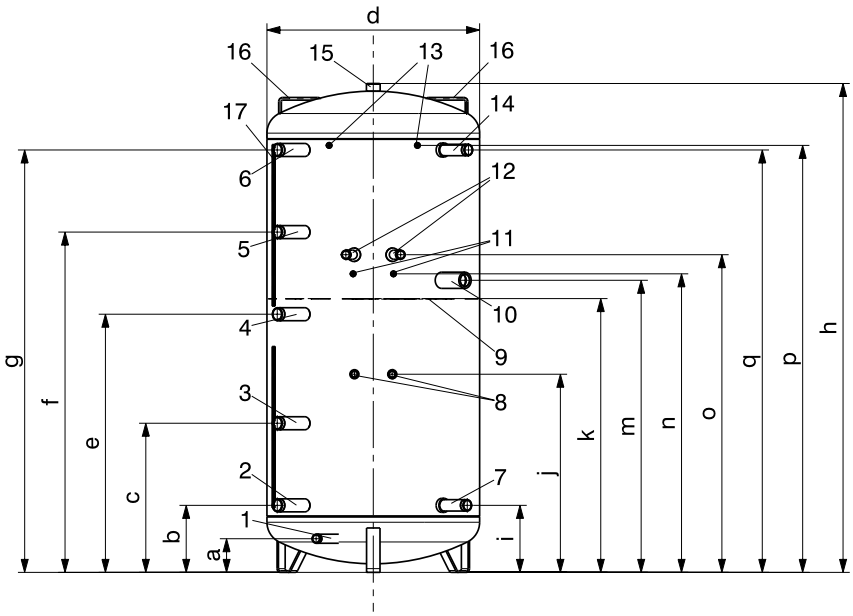

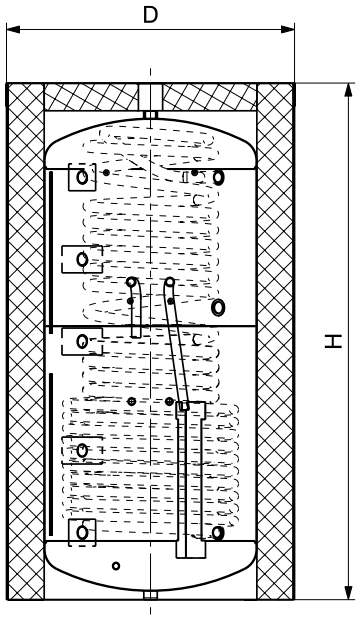

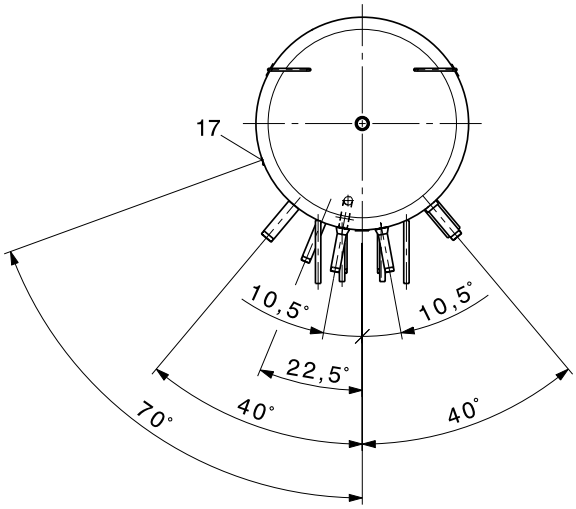

1	Drain	G 1″ (ext. thread)
2	Heat generator connection bottom (vertical baffle plate)	G 1½″ (ext. thread)
3	Heat generator connection 2 - bottom (inflow restrictor)	G 1½″ (ext. thread)
4	Heat generator connection middle (inflow restrictor)	G 1½″ (ext. thread)
5	Heat generator connection 2 - top (single-layer pipe)	G 1½″ (ext. thread)
6	Heat generator connection top (vertical baffle plate)	G 1½″ (ext. thread)
7	Domestic water cold (corrugated pipe)	R 1¼″ (ext. thread)
8	Flow left and return right solar circuit	G ¾″ (ext. thread)
9	Separating plate	
10	Connection for screw-in electric heating element	Rp 1½″ (int. thread)
11	Fixing bolts bottom left and right (heating module)	M10 (int. thread)
12	Flow (left) and return (right) heating	G 1″ (ext. thread)
13	Fixing bolts top left and right (heating module)	M10 (int. thread)
14	Domestic water hot (corrugated pipe)	Rp 1¼″ (int. thread)
15	Possible air vent	Rp 1¼″ (int. thread)
16	Carry handle (2 x)	
17	Sensor terminal strip (type (800) 2 x, type (1000) 3 x)	

Deviations possible as a result of manufacturing tolerances.
Dimensions +/- 10 mm

VarioVal RLS type	D	d	H	h	a	b	c	e	f	g	i	j	k	m	n	o	p	q	Tilting dimension
(800)	1070	790	1919	1816	125	249	554	959	1264	1569	249	736	1017	1085	1109	1180	1586	1569	1828
(1000)	1070	790	2119	2016	125	249	554	959	1264	1569	249	870	1009	1085	1243	1314	1720	1769	2030

Space requirements

Installation example - VarioVal RLS (800):
- Heating module HMV20-3B
- HA group HAV20-3BM-R
- Solar group SAV20

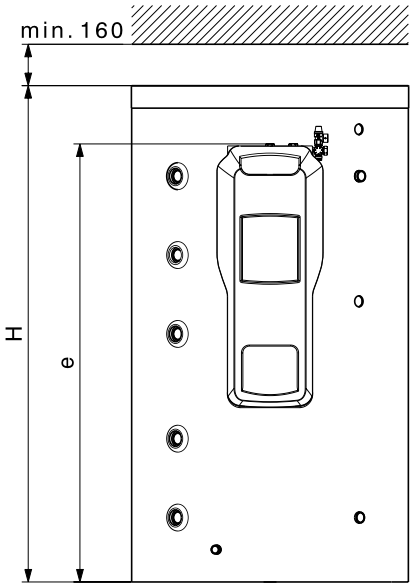

Notices on operation and accessibility
The operating side must be easily accessible. Preferably place heat generator to the left of the storage tank.

Accessibility, left according to heat generator (a):
- Thermal insulation can be opened to position the sensors in the terminal strips

Wall clearance, right (c):
- Installation and removal of the screw-in electric heating element
- Installation of the diaphragm pressure expansion tank
- Hot water (domestic water) flow and return

Distance from the ceiling, top:
- Possibly for safety set

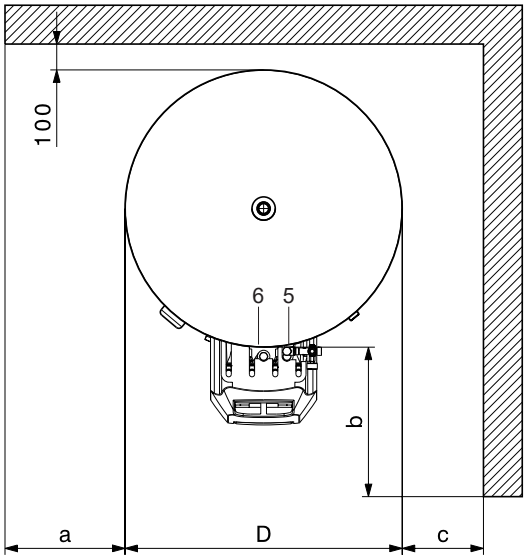

VarioVal type	a	b	c	D	e	H
RL (600)	≥ 300	≥ 1000	≥ 650	1030	1694	1758
RLS (800)	≥ 300	≥ 1000	≥ 650	1070	1694	1919
RLS (1000)	≥ 300	≥ 1000	≥ 650	1070	1828	2119
RHS (800)	≥ 300	≥ 1000	≥ 650	990	1694	1886
RHS (1000)	≥ 300	≥ 1000	≥ 650	990	1828	2086

Representation without thermal insulating hood and DH module hood

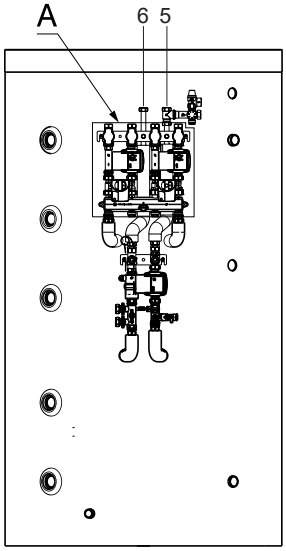

Detail A

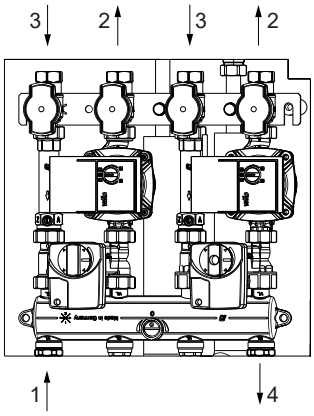

1	Heating flow	G 1″ (ET)
2	Flow heating circuit	Rp ¾″ (IT)
3	Return heating circuit	Rp ¾″ (IT)
4	Heating return	G 1″ (ET)
5	Solar circuit return	G ¾″ (IT)
6	Solar circuit flow	G ¾″ (IT)

Hoval electric heating element

Screw-in electric heating element
Type EP 2.5 to EP 5
The electric heating element consists of three U-shaped round heating rods and a thermostat protection tube mounted in a 1½″ brass nipple, a flat seal is included in the scope of delivery. Due to the insulated installation of the round heating rods, the units are also suitable for enamelled calorifiers. The unheated zone is 150 mm for all outputs.

Flange-mounted electric heating element
Type EFHK-E/-C 4 to 9
The electric heating element consists of three U-shaped round heating rods, each pressed into a press nipple. These are screwed onto a stainless steel flange with thermostat protection tube, a flange seal (EPDM) is included in the scope of delivery. A food-safe plastic disc (PVDF) serves as insulation. The unheated zone is 100 mm for all outputs.

Features for all electric heating element types
- TR: Electromechanical temperature controller
- STB: Electromechanical safety temperature limiter
- Rotary knob with temperature display
- Incoloy® alloy 825 heating rods
- Connection 3 x 400 V
- Not suitable for exclusively electric heating (risk of limescale buildup)

Delivery
Included in separate packaging

On site
Installation of the electric heating element

Range type	Output kW	Installation length mm
Screw-in electric heating element for enamelled calorifiers, stainless steel calorifiers and buffer storage tank		
EP-2.5-1½″	2.35	390
EP-3.5-1½″	3.60	500
EP-5.0-1½″	4.90	620
EP-7.5-1½″	7.50	850
Flange-mounted electric heating element for enamelled calorifiers and buffer storage tank		
EFHK-E-4-180	4.00	380
EFHK-E-6-180	6.00	460
EFHK-E-9-180	9.00	615
Flange-mounted electric heating element for stainless steel calorifier		
EFHK-C-4-180	4.00	380
EFHK-C-6-180	6.00	460
EFHK-C-9-180	9.00	670

Electric heating elements

Screw-in electric heating element
for enamelled calorifiers, stainless steel calorifiers and buffer storage tanks
- Incoloy® alloy 825 heating rods
- Brass nipple G 1½"
- Medium: DHW and heating water
- Unheated zone: 150 mm
- Setting range: 7...34...80 °C
- Safety temperature limiter: 95 °C
- Protection class: IP54
- Casing: approx. 90 x 90 x 140 mm
- Max. operating pressure: 10 bar
- Delivered separately, installation on site
- Not suitable for exclusively electric heating (risk of limescale buildup).

EP type	Heat output kW	Output levels V	Installation length mm	Part No.
2.5	2.35	3 x 400 (1 x 230)	390	6059 778
3.5	3.6	3 x 400	500	6059 779
5.0	4.9	3 x 400	620	6059 780
7.5	7.5	3 x 400	850	6059 781

Flange-mounted electric heating element
for enamelled calorifiers
and buffer storage tanks
- Incoloy® alloy 825 heating rods
- Stainless steel flange Ø 180 mm
- Medium: DHW and heating water
- Unheated zone: 100 mm
- Setting range: 7...34...80°C
- Safety temperature limiter: 95 °C
- Protection class: IPX0
- Casing: approx. Ø 185 x 103 mm
- Max. operating pressure: 10 bar
- Delivered separately, installation on site
- Not suitable for exclusively electric heating (risk of limescale buildup).

EFHK-E type	Heat output 3 x 400 V kW	changeable to	Installation length mm	Part No.
4-180	4.0		380	6053 353
		2.6 kW/3 x 400 V		
		2.0 kW/3 x 400 V		
		1.3 kW/3 x 400 V		
		1.3 kW/1 x 230 V		
6-180	6.0		460	6053 354
		4.0 kW/3 x 400 V		
		3.0 kW/3 x 400 V		
		2.0 kW/3 x 400 V		
		2.0 kW/1 x 230 V		
9-180	9.0		615	6052 438
		5.7 kW/3 x 400 V		
		4.2 kW/3 x 400 V		
		2.8 kW/3 x 400 V		
		2.8 kW/1 x 230 V		

Services

Commissioning
Commissioning by works service or Hoval trained authorised serviceman/company is condition for warranty.

For commissioning and other services please contact your Hoval sales office.

Type		Screw-in electric heating element EP 2.5 to 5	Flange-mounted electric heating element EFHK-E / -C 4 to 9
Temperature setting range	°C	7...34...80	7...34...80
Switch-off temperature	°C	95	95
Ambient temperature at the switchgear	°C	max. 80	max. 80
Thermal switching difference	K	8 ± 4	8 ± 4
Ambient temperature during storage and transport	°C	-12...+80	-12...+80
Flange/thread size		G 1½″ (conical)	External Ø 180 mm, pitch circle Ø 150 mm, 8 x M10
Flange/thread connection material		Brass (CuZn40Pb2)	stainless steel (1.4404) Seal: EPDM (KTW approval)
Round heating rods		Incoloy® alloy 825, 2.4858	Incoloy® alloy 825, 2.4858
Surface load	W/cm²	approx. 7	approx. 5
Electrical connection		Screw terminals, PG screwed cable gland	Spring-cage terminals, strain relief, lead-through
Operating pressure	bar	Max. 10	Max. 10
Casing top part		Polycarbonate, RAL 3000 (red)	ABS, black
Type of protection		IP54	IPX0
Dimensions		See dimensional drawing	See dimensional drawing

Screw-in electric heating element

1. Screw-in electric heating element with insulated installation of the round heating rods which are suitable for enamelled as well as black steel calorifiers and, thanks to DIP switch, also for stainless steel calorifiers
2. Standard hexagon profile for secure tightening with 60 mm open-end spanner
3. Cylindrical thread for precise casing position and tight mounting
4. Surface load 7 W/cm²
5. Sensor position in the immersion tube for identical temperature detection of safety temperature limiter and temperature controller

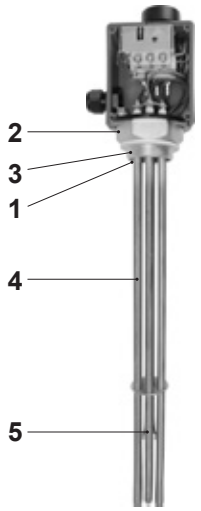

Shown without cover

Flange-mounted electric heating element

1. Standard flange Ø 180 mm, EFHK-E suitable for enamelled as well as black steel calorifiers and, with EFHK-C, also suitable for stainless steel calorifiers thanks to mounted plastic insulating plate
2. Delivery incl. EPDM flat seal (enclosed loose)
3. Low surface load 5 W/cm², for less calcification
4. Sensor position in the immersion tube for identical temperature detection of safety temperature limiter and temperature controller
5. Insulated mounting of the heating rods for reduced corrosion

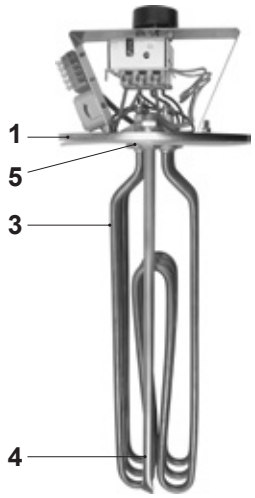

Shown without cover

Connection diagram screw-in electric heating element

230 V: P to L1 / N to L2

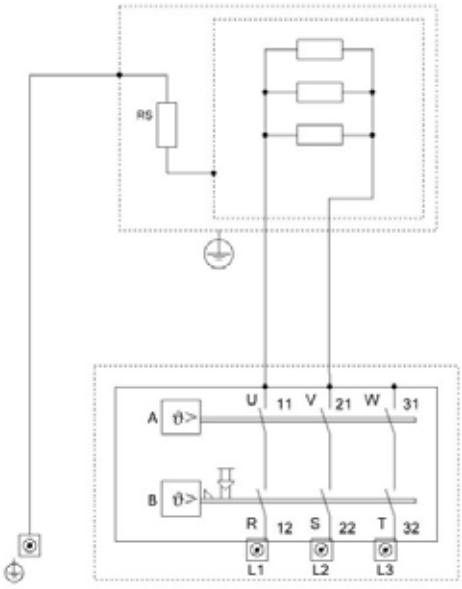

3 ~ 400 V: L1 / L2 / L3

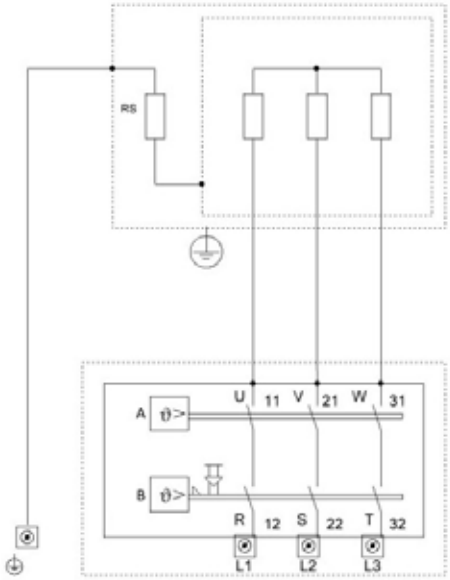

A) Temperature controller
B) Safety temperature limiter

Connection diagram flange-mounted electric heating element

3 x 400 V Δ: L1 / L2 / L3

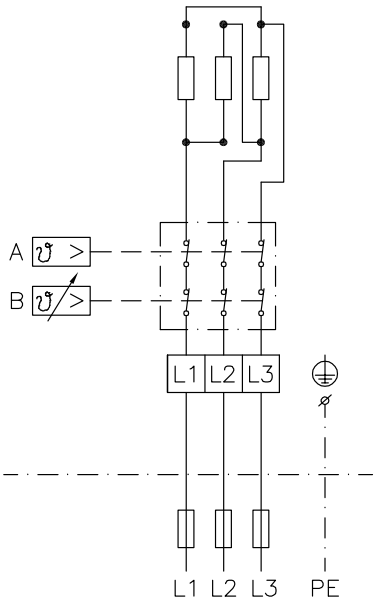

230 V Δ: L1 su N

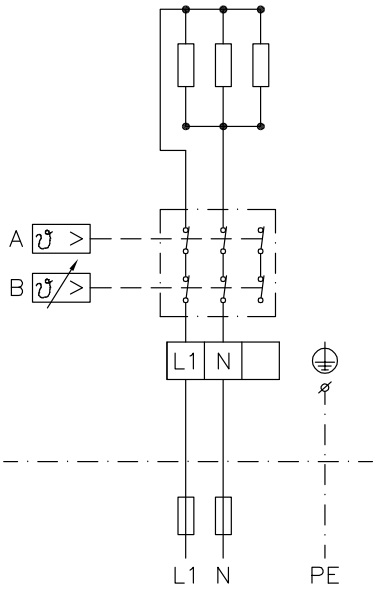

Screw-in electric heating element
(Dimensions in mm)

EP 2.5 / 3.5 / 5.0 / 7.5
for enamelled calorifiers, stainless steel calorifiers and buffer storage tanks

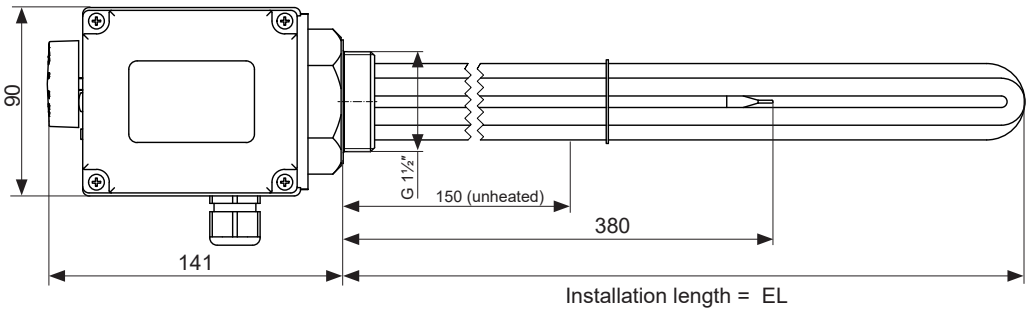

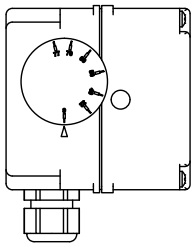

Installation length =	EL
EP 2.5	390
EP 3.5	500
EP 5.0	620
EP 7.5	850

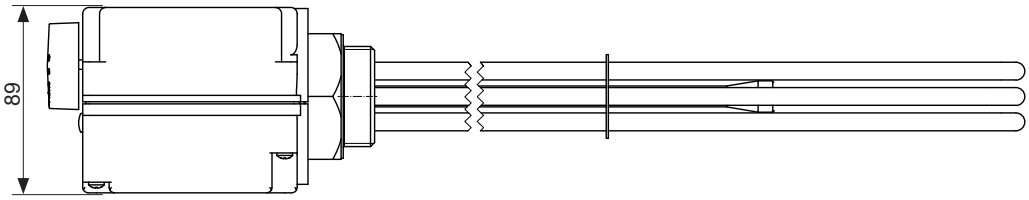

Flange-mounted electric heating element
(Dimensions in mm)

EFHK-E-4 / 6 / 9-180
for enamelled calorifiers and buffer storage tanks

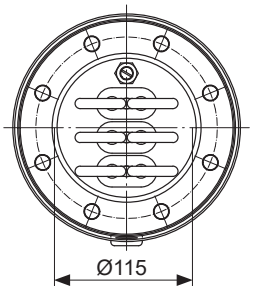

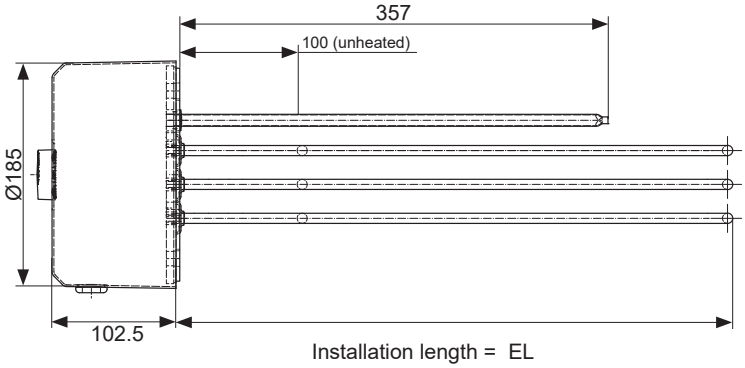

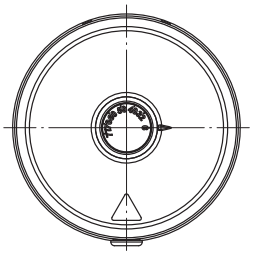

Installation length =	EL
EFHK-E-4-180	380
EFHK-E-6-180	460
EFHK-E-9-180	615

EFHK-C-4 / 6 / 9-180
for stainless steel calorifiers

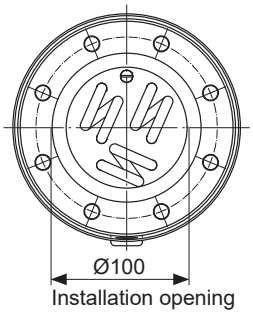

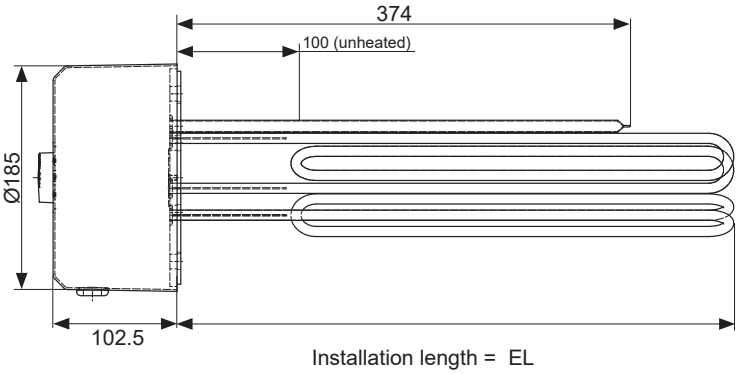

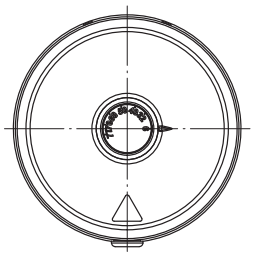

Installation length =	EL
EFHK-C-4-180	380
EFHK-C-6-180	460
EFHK-C-9-180	670

Calorifier / storage tank	Flange-mounted electric heating element												Screw-in electric heating element			
	EFHK-E-4-180 4.0 kW		EFHK-E-6-180 6.0 kW		EFHK-E-9-180 8.5 kW		EFHK-C-4-180 4.0 kW		EFHK-C-6-180 6.0 kW		EFHK-C-9-180 9.0 kW		EP 2.5 2.35 kW	EP 3.5 3.6 kW	EP 5 4.9 kW	EP 7.5 7.5 kW
Installation type	Flange Ø 180												Sleeve 1½″			
Installation position	top	bottom	top	bottom	top	bottom	top	bottom	top	bottom	top	bottom				
Stainless steel calorifier																
CombiVal C																
CombiVal C (200)								●		●						
CombiVal C (300)								●		●						
CombiVal C (400)								●		●						
CombiVal C (500)								●		●						
CombiVal C (750)								●		●		●				
CombiVal C (1000)								●		●		●				
CombiVal C (1500)							●	●	●	●	●	●				
CombiVal C (2000)							●	●	●	●	●	●				
CombiVal C (2500)								●		●		●				
CombiVal CR																
CombiVal CR (200)								●		●			●	●		
CombiVal CR (300)								●		●			●	●		
CombiVal CR (500)								●		●			●	●	●	
CombiVal CR (800)							●	●	●	●	●	●				
CombiVal CR (1000)							●	●	●	●	●	●				
CombiVal CSR																
CombiVal CSR (300)								●		●			●	●		
CombiVal CSR (400)								●		●			●	●	●	
CombiVal CSR (500)								●		●			●	●	●	
CombiVal CSR (800)							●	●	●	●	●	●				
CombiVal CSR (1000)							●	●	●	●	●	●				
CombiVal CSR (1250)							●	●	●	●	●	●				
CombiVal CSR (1500)							●	●	●	●	●	●				
CombiVal CSR (2000)							●	●	●	●	●	●				
MultiVal CRR																
MultiVal CRR (500)								●		●			●	●	●	
MultiVal CRR (800)							●	●	●	●	●	●				
MultiVal CRR (1000)							●	●	●	●	●	●				
MultiVal CSRR																
MultiVal CSRR (500)								●		●			●	●	●	
MultiVal CSRR (800)							●	●	●	●	●	●				
MultiVal CSRR (1000)							●	●	●	●	●	●				
MultiVal CSRR (1500)							●	●	●	●	●	●				
MultiVal CSRR (2000)							●	●	●	●	●	●				
Enamel calorifiers																
CombiVal E																
CombiVal E (300)		●		●												
CombiVal E (500)		●		●												
CombiVal E (800)		●		●		●										
CombiVal E (1000)		●		●		●										
CombiVal E (1500)	●	●	●	●	●	●										
CombiVal E (2000)	●	●	●	●	●	●										
CombiVal ER																
CombiVal ER (200)		●														
CombiVal ERW (200)		●														
CombiVal ER (300)		●		●												
CombiVal ER (400)		●		●												
CombiVal ER (500)		●		●												
CombiVal ER (800)		●		●		●										
CombiVal ER (1000)		●		●		●										
CombiVal ESR																
CombiVal ESR (200)		●														
CombiVal ESR (300)		●		●												
CombiVal ESR (400)		●		●												
CombiVal ESSR																
CombiVal ESSR (500)		●		●									●	●	●	
CombiVal ESSR (800)	●	●	●	●	●	●										
CombiVal ESSR (1000)	●	●	●	●	●	●										
CombiVal ERR																
MultiVal ERR (300)		●											●	●		
MultiVal ERR (400)		●		●									●	●	●	
MultiVal ERR (500)		●		●									●	●	●	
CombiVal ESRR																
MultiVal ESRR (500)		●		●									●	●		
MultiVal ESRR (800)	●	●	●	●	●	●										
MultiVal ESRR (1000)	●	●	●	●	●	●										

Calorifier / storage tank	Flange-mounted electric heating element												Screw-in electric heating element			
	EFHK-E-4-180 4.0 kW		EFHK-E-6-180 6.0 kW		EFHK-E-9-180 8.5 kW		EFHK-C-4-180 4.0 kW		EFHK-C-6-180 6.0 kW		EFHK-C-9-180 9.0 kW		EP 2.5 2.35 kW	EP 3.5 3.6 kW	EP 5 4.9 kW	EP 7.5 7.5 kW
Installation type	Flange Ø 180												Sleeve 1½″			
Installation position	top	bottom	top	bottom	top	bottom	top	bottom	top	bottom	top	bottom				
Buffer storage tank and combination storage tank																
EnerVal																
EnerVal (200)													●	●		
EnerVal (300)													●	●		
EnerVal (500)													●	●	●	
EnerVal (800)													●	●	●	●
EnerVal (1000)													●	●	●	●
EnerVal (1500)													●	●	●	●
EnerVal (2000)													●	●	●	●
EnerVal G																
EnerVal G (800)													●	●	●	●
EnerVal G (1000)													●	●	●	●
EnerVal G (1500)													●	●	●	●
EnerVal G (2000)													●	●	●	●
EnerVal G (2500)													●	●	●	●
EnerVal G (4000)													●	●	●	●
EnerVal G (6000)													●	●	●	●
VarioVal FLS/Rxx																
VarioVal FLS (800)													●	●	●	
VarioVal FLS (1000)													●	●	●	
VarioVal RHS (800)													●	●	●	
VarioVal RHS (1000)													●	●	●	
VarioVal RL (600)													●	●	●	
VarioVal RLS (800)													●	●	●	
VarioVal RLS (1000)													●	●	●	

Photovoltaic electric heating element

Screw-in electric heating element type EP 3.5 bis EP 5.2
Screw-in electric heating element EP: The electric heating element consists of three U-shaped round heating rods, which are mounted in a conical brass nipple 1½″ insulated by means of food-safe plastic sleeves. Thanks to the insulated installation of the round heating elements, the devices are also suitable for enamelled storage tanks. The unheated zone is 150 mm for all outputs.

Flange-mounted electric heating element type EFHK-E / -C 3.5 bis 5.2
Flange-mounted electric heating element EFHK: The electric heating element consists of three U-shaped round heating rods, each pressed into a press nipple. These are screwed with the immersion sleeve onto a steel flange. A food-safe plastic disc serves as insulation. The unheated zone is 70 mm for all outputs.

EP-PV EFHK-E/C-PV

Application
- As supplementary heating of service and heating water in photovoltaic systems.
- For optimisation of the internal consumption of PV energy.
- To minimise the switch-ons/cycles of the main heat generator e.g. exclusively hot water production in summer.

Features
- TR: Electromechanical temperature controller according to EN 14597, not unbreakable.
- STB: Electromechanical temperature limiter according to EN 14597, unbreakable, if the excess temperature is exceeded, the switchgear switches OFF and remains locked in this position. Unlocking is done manually after the sensor tube has cooled down by approx. 10 K.
  - Time constant of the sensor tube according to EN 14597
  - Mode of operation TR type 2 B according to EN 14597
  - Mode of operation STB type 2 BK according to EN 14597

Connections
The screw-in electric heating element is equipped with 4 connection sockets.
The flange-mounted electric heating element is equipped with 4 connection sockets.
All necessary plugs are included in the scope of delivery. After initial connection or commissioning by a qualified electrician, the device can be completely disconnected from the mains and the connection to the control unit by pulling out the plugs.

Function modes
Analog modes (0-10 V control signal)
The electric heating element can be controlled with a 0-10 V signal in 7 power levels.
From a voltage of 1.25 V, the device switches to the first heating stage. Each additional stage requires a voltage increase of 1.25 V.
From a voltage of 8.75 V, the device switches to the seventh heating stage. To avoid flickering, a hysteresis of 0.25 V is programmed in.

Range type	Output kW	Installation length mm
Photovoltaic screw-in electric heating element for enamelled calorifiers and stainless steel calorifiers		
EP-3.5-1½″-PV	3.50	600
EP-4.4-1½″-PV	4.40	700
EP-5.2-1½″-PV	5.20	750
Photovoltaic flange-mounted electric heating element for enamelled calorifiers, stainless steel calorifiers and buffer storage tanks		
EFHK-E/C-3.5-180-PV	3.50	360
EFHK-E/C-4.4-180-PV	4.40	420
EFHK-E/C-5.8-180-PV	5.80	540

Modbus TCP
In this function, the device obtains an IP address via a local DHCP server (router). After the electric heating element has been integrated into the network, it can be controlled in 7 power levels and the temperature of the sensors can be read out. The power levels can be controlled via a value 0-7 or via a setpoint value specification (here the electric heating element independently selects the suitable power level).

Legionella protection
The automatic legionella protection automatically heats the system to min. 65 °C daily/weekly or fortnightly. If the temperature of 65 °C is reached within the interval, regardless of the legionella protection program, the interval timer starts over from this point.
The parameters can be configured via Modbus or MQTT.

Request contact of the main heat generator
If a heat pump is available, the device can be used as a supplementary heater. The heat pump is controlled via a digital input, which activates the full heating output (level 7).

Emergency operation
The device has a push-button with which the full heating power (level 7) can be switched on and off manually at any time. This function is automatically deactivated after 24 hours of continuous operation.

Corrosion protection
The setting must be selected depending on the storage type:
- Leave buffer storage tank or enamelled tanks slide switch in position “2” (factory setting)
- Stainless steel tank
  slide switch to be set to “ON” position

Failure to observe this may result in corrosion damage to the device and storage tank.

Web interface
- Setting setpoint temperatures for minimum temperature, request temperature, legionella protection temperatures, low-tariff temperature
- Reading out the control signals
- Reading out actual temperatures
- Reading out operating hours
- Setting up the Modbus configuration or direct communication with SMA or SENEC

Photovoltaic electric heating elements

Photovoltaic screw-in electric heating element
for enamelled calorifiers and
stainless steel calorifiers
- Incoloy® alloy 825 heating rods
- Brass nipple R 1½″
- LAN, Modbus TCP, 0-10 V DC
- Medium: DHW and heating water
- Voltage: 3 x 400 V
- Unheated zone: 150 mm
- Setting range: 0…60…85 °C
- Safety temperature limiter: 110 °C
- Protection class: IP41
- Casing: 126 x 135 mm
- Max. operating pressure: 10 bar
- Delivered separately, installation on site
- Not suitable for exclusively electric heating (risk of limescale buildup).

EP type	Heat output 3 x 400 V kW	Output levels kW	Installation length mm	Part No.
3.5-1½″-PV	3.5	7 x 0.50	600	6058 066
4.4-1½″-PV	4.4	7 x 0.65	700	6058 067
5.2-1½″-PV	5.2	7 x 0.75	750	6058 068

Photovoltaic flange-mounted electric heating element
for enamelled calorifiers, stainless steel calorifiers and buffer storage tanks
- Incoloy® alloy 825 heating rods
- Ø 180 mm flange
- LAN, Modbus TCP, 0-10 V DC
- Medium: DHW and heating water
- Voltage: 3 x 400 V
- Unheated zone: 70 mm
- Setting range: 0…60…85 °C
- Safety temperature limiter: 110 °C
- Protection class: IP21
- Casing: Ø 186 mm
- Max. operating pressure: 10 bar
- Delivered separately, installation on site
- Not suitable for exclusively electric heating (risk of limescale buildup).

EFHK-E/C type	Heat output 3 x 400 V kW	Output levels kW	Installation length mm	Part No.
3.5-180-PV	3.5	7 x 0.50	360	6058 063
4.4-180-PV	4.4	7 x 0.65	420	6058 064
5.8-180-PV	5.8	7 x 0.83	540	6058 065

Services

Commissioning
Commissioning by works service or Hoval trained authorised serviceman/company is condition for warranty.

For commissioning and other services please contact your Hoval sales office.

Photovoltaic electric heating element

		Photovoltaic screw-in electric heating element	Photovoltaic flange-mounted electric heating element
Temperature setting range	°C	28...85	28...85
Switch-off temperature	°C	110	110
Ambient temperature at the switchgear	°C	max. 50	max. 50
Thermal switching difference	K	11.0 ± 5.5	11.0 ± 5.5
Ambient temperature during storage and transport	°C	-30...+90	-30...+90
Flange/thread size		R 1½″ (conical)	External Ø 180 mm, pitch circle Ø 150 mm, 8 x M12
Flange/thread connection material		Brass (CuZn40Pb2)	Black steel (St 37/1.0038, painted) Seal: EPDM (KTW approval)
Round heating rods		Incoloy® alloy 825, 2.4858	Incoloy® alloy 825, 2.4858
Surface load	W/cm²	8-9	7
Electrical connection		Connector plug with screw contacts	Connector plug with screw contacts
Operating pressure	bar	Max. 10	Max. 10
Casing top part		Polycarbonate, RAL 7035 (light grey)	Polycarbonate, RAL 7035 (light grey)
Casing bottom part		Polycarbonate, RAL 7016 (anthracite grey)	Polycarbonate, RAL 7016 (anthracite grey)
Type of protection		IP41	IP21
Dimensions		See dimensional drawing	See dimensional drawing

Photovoltaic screw-in electric heating element

1. Screw-in electric heating element with insulated installation of the round heating rods which are suitable for enamelled as well as black steel calorifiers and, thanks to DIP switch, also for stainless steel calorifiers
2. Standard hexagon profile for secure tightening with 60 mm open-end spanner
3. Conical thread for precise casing position and tight mounting (1½″ standard)
4. Surface load 8-9 W/cm², suitable for heating water
5. Optimum sensor position in the oval immersion tube for identical temperature detection of safety temperature limiter and temperature controller

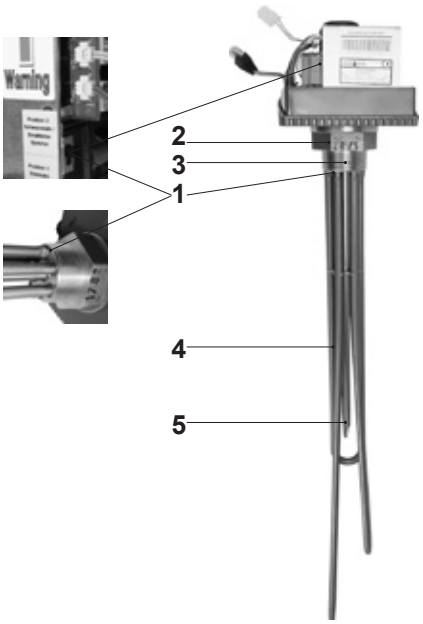

Illustrations without cover

Photovoltaic flange-mounted electric heating element

1. Standard flange Ø 180 mm, suitable for enamelled as well as black steel calorifiers and, thanks to DIP switch, also for stainless steel calorifiers
2. Delivery incl. flat seal (included separately)
3. Deep surface load 7 W/cm², for lower limescale buildup
4. Optimum sensor position
5. Insulated mounting of the heating rods for reduced corrosion

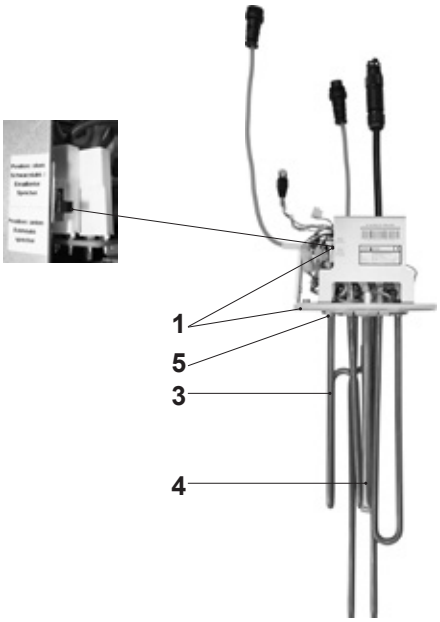

Connection diagram photovoltaic screw-in electric heating element

Plug Z1 – mains supply
For power supply to the heating rods and internal circuit boards
Wieland RST 5-pin plug, IP66
Screw connections max. 2.5 mm² (up to 1.5 mm² end ferrules can be used)
Capacity: 16 A, 250/400 V

Plug Z2 – sensors and analog input
Connection possibilities of the external sensors and 0-10 V analog signal
Bulgin Mini Buccaneer 6-pin plug, IP68
Screw connections max. 1.0 mm² (18 AWG)
Capacity: 3 A, 250 V~

Plug Z3 – communication and relay signal
Connection possibilities for communication via RJ485 interface
Bulgin Mini Buccaneer 6-pin plug, IP68
Screw connections max. 1.0 mm² (18 AWG)
Capacity: 3 A, 250 V~

Plug Z4 – RJ45 connection socket
Network connection via LAN connection possible

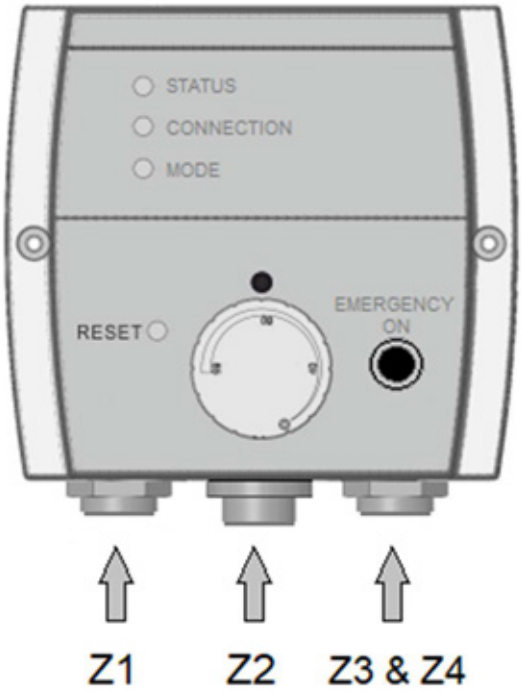

Connection plugs photovoltaic flange-mounted electric heating element

Plug Z1 – mains supply
For power supply to the heating rods and internal circuit boards
Wieland RST 5-pin plug, IP66
Screw connections max. 2.5 mm² (up to 1.5 mm² end ferrules can be used)
Capacity: 16 A, 250/400 V

Plug Z2 – sensors and analog input
Connection possibilities of the external sensors 1-3
Bulgin Mini Buccaneer 6-pin plug, IP68
Screw connections max. 1.0 mm² (18 AWG)
Capacity: 3 A, 250 V~

Plug Z3 – communication and relay signal
Connection possibilities of the analog signal (0-10 V) and the heat pump release:
Bulgin Mini Buccaneer 6-pin plug, IP68
Screw connections max. 1.0 mm² (18 AWG)
Capacity: 3 A, 250 V~

Plug Z4 – RJ45 connection socket
Network connection via LAN connection possible

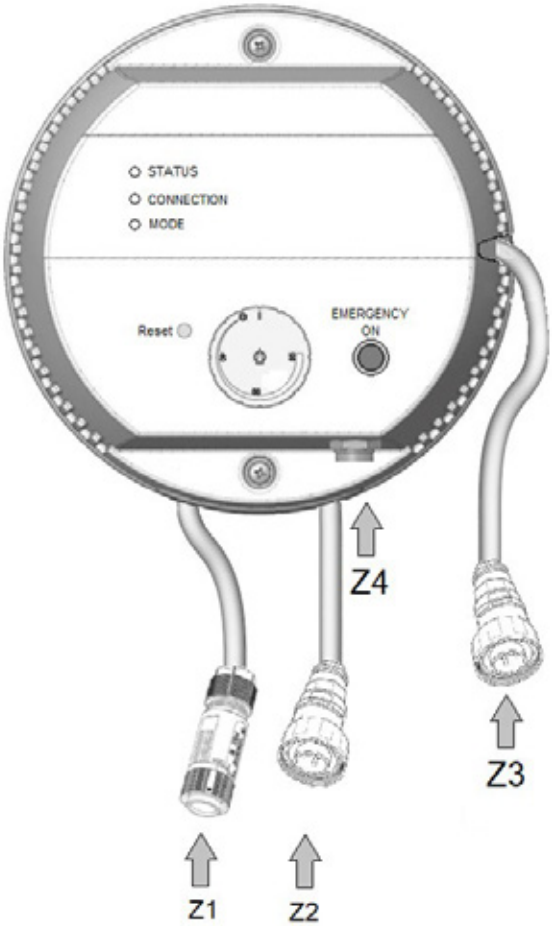

Connection diagram photovoltaic screw-in electric heating element

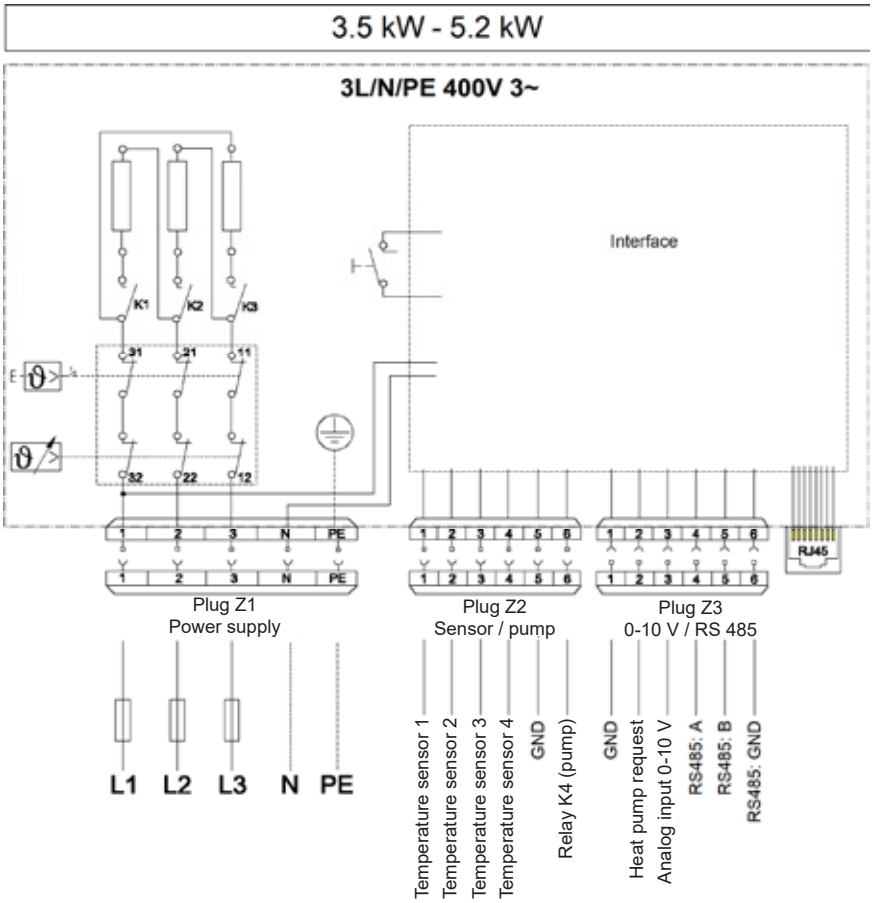

No external switching device (e.g. contactor or relay) is required, the heating element is switched exclusively via the integrated interfaces (e.g. Modbus, 0-10 V, switching contact, etc.).

Heat Pump Request =
Potential-free request contact of the main heat generator

Relais K4 (pump) =
Circulating pump switch contact when used in a flow cartridge

Connection diagram photovoltaic flange-mounted electric heating element

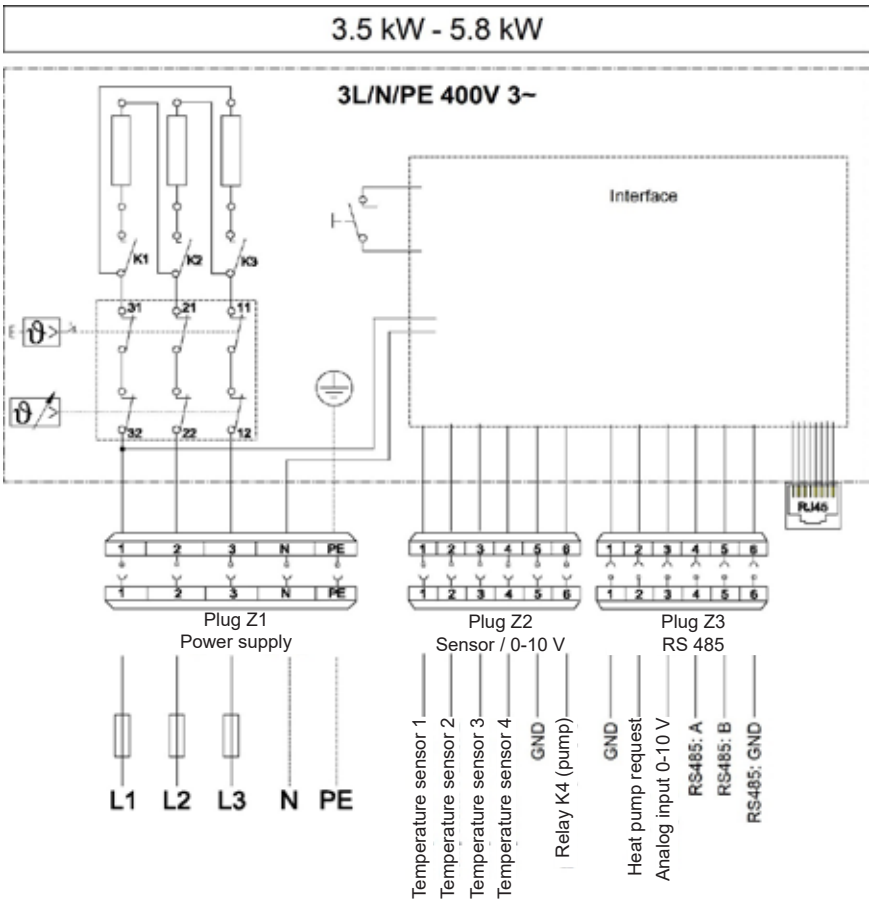

Photovoltaic screw-in electric heating element
(Dimensions in mm)

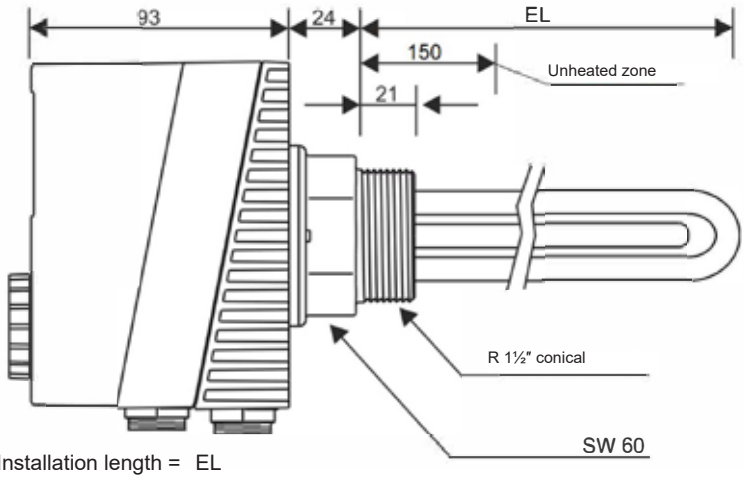

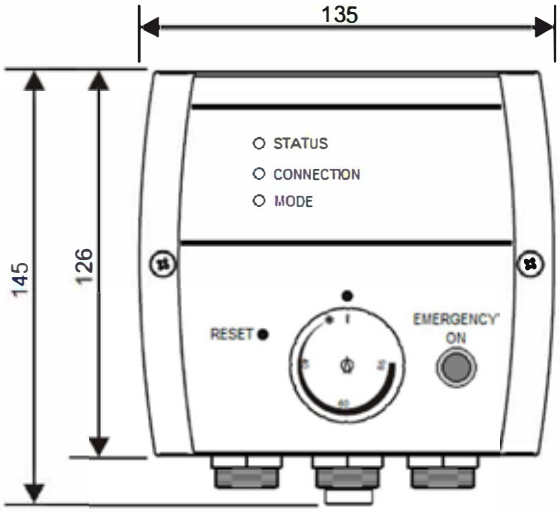

Installation length =	EL
EP-3.5-1½"-PV	600
EP-4.4-1½"-PV	700
EP-5.2-1½"-PV	750

Photovoltaic flange-mounted electric heating element
(Dimensions in mm)

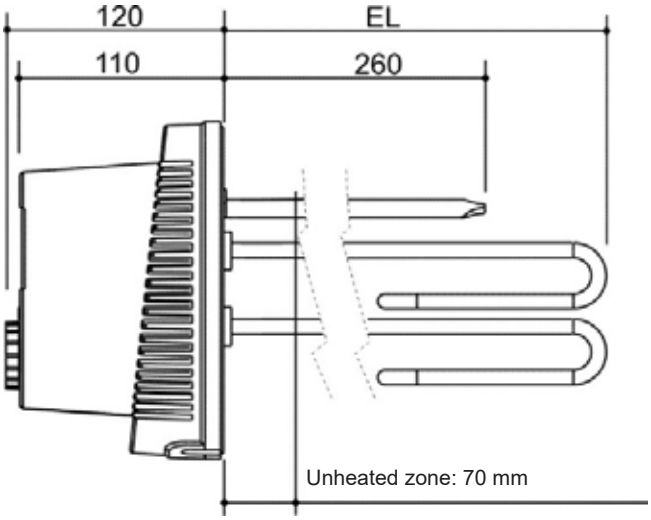

Casing diameter: Ø = 186

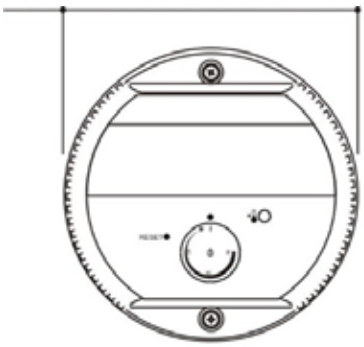

Pitch circle diameter: Ø = 150

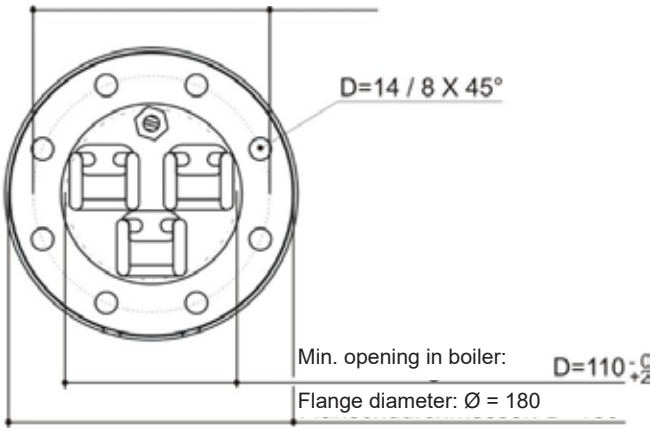

Installation length =	EL
EFHK-E/C-3.5-180-PV	360
EFHK-E/C-4.4-180-PV	420
EFHK-E/C-5.8-180-PV	540

Calorifier / storage tank	Photovoltaic flange-mounted electric heating element						Photovoltaic screw-in electric heating element		
	EFHK-E/C-PV-3.5-180 3.5 kW		EFHK-E/C-PV-4.4-180 4.4 kW		EFHK-E/C-PV-5.8-180 5.8 kW		EP-PV-3.5 3.5 kW	EP-PV-4.4 4.4 kW	EP 5.2 5.25 kW
Installation type	Flange Ø 180						Sleeve 1½″		
Installation position	top	bottom	top	bottom	top	bottom			
Stainless steel calorifier									
CombiVal C									
CombiVal C (200)		●		●					
CombiVal C (300)		●		●					
CombiVal C (400)		●		●		●			
CombiVal C (500)		●		●		●			
CombiVal C (750)		●		●		●			
CombiVal C (1000)		●		●		●			
CombiVal C (1500)	●	●	●	●	●	●			
CombiVal C (2000)	●	●	●	●	●	●			
CombiVal C (2500)		●		●		●			
CombiVal CR									
CombiVal CR (200)		●		●		●			
CombiVal CR (300)		●		●					
CombiVal CR (500)		●		●		●	●		
CombiVal CR (800)	●	●	●	●	●	●			
CombiVal CR (1000)	●	●	●	●	●	●			
CombiVal CSR									
CombiVal CSR (300)		●		●					
CombiVal CSR (400)		●		●		●	●		
CombiVal CSR (500)		●		●		●	●		
CombiVal CSR (800)	●	●	●	●	●	●			
CombiVal CSR (1000)	●	●	●	●	●	●			
CombiVal CSR (1250)	●	●	●	●	●	●			
CombiVal CSR (1500)	●	●	●	●	●	●			
CombiVal CSR (2000)	●	●	●	●	●	●			
MultiVal CRR									
MultiVal CRR (500)		●		●		●	●		
MultiVal CRR (800)	●	●	●	●	●	●			
MultiVal CRR (1000)	●	●	●	●	●	●			
MultiVal CSRR									
MultiVal CSRR (500)		●		●		●	●		
MultiVal CSRR (800)	●	●	●	●	●	●			
MultiVal CSRR (1000)	●	●	●	●	●	●			
MultiVal CSRR (1500)	●	●	●	●	●	●			
MultiVal CSRR (2000)	●	●	●	●	●	●			
Enamel calorifiers									
CombiVal E									
CombiVal E (300)		●		●					
CombiVal E (500)		●		●		●			
CombiVal E (800)	●	●	●	●	●	●			
CombiVal E (1000)	●	●	●	●	●	●			
CombiVal E (1500)	●	●	●	●	●	●			
CombiVal E (2000)	●	●	●	●	●	●			
CombiVal ER									
CombiVal ER (200)		●							
CombiVal ERW (200)		●							
CombiVal ER (300)		●		●					
CombiVal ER (400)		●		●					
CombiVal ER (500)		●		●					
CombiVal ER (800)		●		●		●			
CombiVal ER (1000)		●		●		●			
CombiVal ESR									
CombiVal ESR (200)		●							
CombiVal ESR (300)		●		●					
CombiVal ESR (400)		●		●					
CombiVal ESSR									
CombiVal ESSR (500)		●		●			●		
CombiVal ESSR (800)	●	●	●	●	●	●			
CombiVal ESSR (1000)	●	●	●	●	●	●			

Calorifier / storage tank	Photovoltaic flange-mounted electric heating element						Photovoltaic screw-in electric heating element		
	EFHK-E/C-PV-3.5-180 3.5 kW		EFHK-E/C-PV-4.4-180 4.4 kW		EFHK-E/C-PV-5.8-180 5.8 kW		EP-PV-3.5 3.5 kW	EP-PV-4.4 4.4 kW	EP 5.2 5.25 kW
Installation type	Flange Ø 180						Sleeve 1½″		
Installation position	top	bottom	top	bottom	top	bottom			
CombiVal ERR									
MultiVal ERR (300)		●							
MultiVal ERR (400)		●		●			●		
MultiVal ERR (500)		●		●			●		
CombiVal ESRR									
MultiVal ESRR (500)		●		●					
MultiVal ESRR (800)	●	●	●	●	●	●			
MultiVal ESRR (1000)	●	●	●	●	●	●			
CombiVal WPEF									
CombiVal WPEF (300)		●		●					

Calorifier / storage tank	Photovoltaic flange-mounted electric heating element						Photovoltaic screw-in electric heating element					
	EFHK-E/C-PV-3.5-180 3.5 kW		EFHK-E/C-PV-4.4-180 4.4 kW		EFHK-E/C-PV-5.8-180 5.8 kW		EP-PV-3.5 3.5 kW		EP-PV-4.4 4.4 kW		EP 5.2 5.25 kW	
Installation type	Flange Ø 180						Sleeve 1½″					
Installation position	top	bottom	top	bottom	top	bottom	top	bottom	top	bottom	top	bottom
Buffer storage tank and combination storage tank												
EnerVal												
EnerVal (200)												
EnerVal (300)												
EnerVal (500)							●	●				
EnerVal (800)							●		●		●	
EnerVal (1000)							●		●		●	
EnerVal (1500)							●		●		●	
EnerVal (2000)							●		●		●	
EnerVal G												
EnerVal G (800)							●		●		●	
EnerVal G (1000)							●		●		●	
EnerVal G (1500)							●		●		●	
EnerVal G (2000)							●		●		●	
EnerVal G (2500)							●		●		●	
EnerVal G (4000)							●		●		●	
EnerVal G (6000)							●		●		●	
VarioVal FLS/Rxx												
VarioVal FLS (800)							●		●		●	
VarioVal FLS (1000)							●		●		●	
VarioVal RHS (800)							●					
VarioVal RHS (1000)							●					
VarioVal RL (600)							●		●			
VarioVal RLS (800)							●		●			
VarioVal RLS (1000)							●		●			

Instructions and guidelines

The following instructions and guidelines have to be observed:

- technical data and mounting instructions of Hoval
- hydraulic regulations and those pertaining to instrumentation and control of Hoval
- instructions of the local fire police as well as country specific instructions
- instructions of the power station (concerning heat input of the electric heating element)
- fire protection instructions
- VDI 2035 Prevention of damage from corrosion and stone formation in hot water plants
- VDE 0100
- instructions concerning operating pressure and operating temperature
- DIN 4708 Central domestic hot water systems, page 1-3

Plumbing

- For electrical heating a hot water distribution system without circulation is to be planned if possible.
- Maximum safety adjustment: 1 bar less than the maximum operating pressure
- Please select the material of the connection components (pipes, sealing, safety valve,...) so that it can't get damaged by excessive temperatures caused by a malfunction of the temperature control circuit.

Assembly of the heating system

- The calorifier or additional heater coils must be provided with charging pump.
- An automatic deaerator must be installed at the highest point in the hot water flow.
- Flow and return pipes are to be attached in such way that with turned off charging pump and during electrical heating no back circulation and force of gravity circulation can occur.
- Expansion of heating water must be always ensured (also during electric charging resp. heat pump operation).

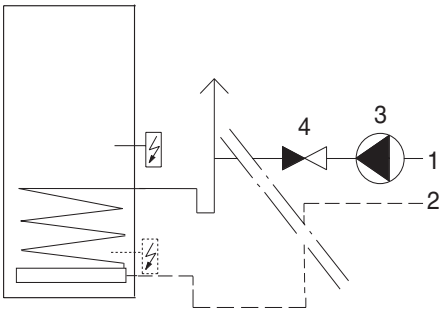

1 Flow
2 Return
3 Charging pump
4 Non-return valve

Necessary space

- The inspection opening has to be well accessible.
- Distance to the wall for the installation and removal of the electric heating element (a)

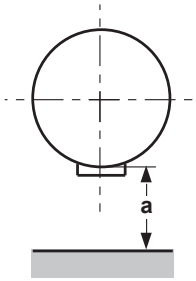

Calorifier		Type	a
CombiVal	ER/ESR/ESSR	200-500	≥ 600
MultiVal	ERR	300-500	≥ 750
CombiVal	ER/ESSR	800-1000	≥ 950
MultiVal	ESRR	800-1000	≥ 950
CombiVal	CR	200-500	≥ 750
MultiVal	CRR/CSRR	300-500	≥ 750
CombiVal	CR	800-2000	≥ 950
MultiVal	CRR/CSRR	800-2000	≥ 950
CombiVal	CSR	300-500	≥ 750
CombiVal	CSR	800-1000	≥ 950
Modul plus (on the left or right side, distance to the wall for casing installation)			≥ 700

Notice on request contact:
When the main heat generator is requested via the "Heat Pump Request" switch contact, note that the PV heating rods are programmed with only 55 °C as the standard request temperature in the factory setting. The parameter must be adapted to the specific system in the web interface.

Calorifier with one coil

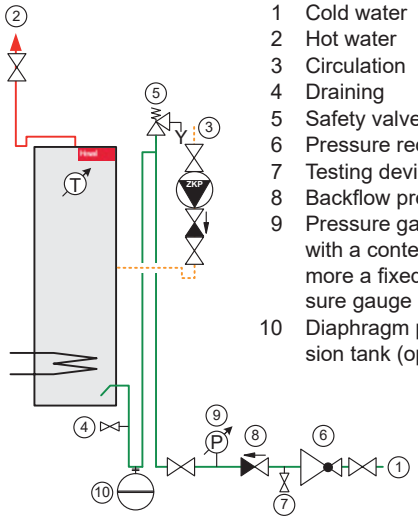

1 Cold water
2 Hot water
3 Circulation
4 Draining
5 Safety valve
6 Pressure reducing valve
7 Testing device
8 Backflow preventer
9 Pressure gauge connection; with a content of 1000 l and more a fixed installed pressure gauge is required.
10 Diaphragm pressure expansion tank (optional)

Calorifier with two coils (incl. solar)

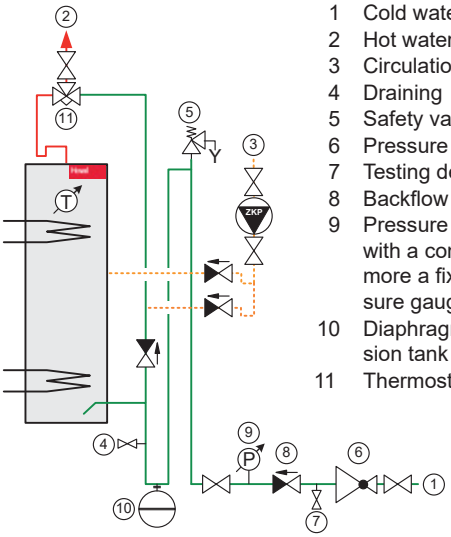

1 Cold water
2 Hot water
3 Circulation
4 Draining
5 Safety valve
6 Pressure reducing valve
7 Testing device
8 Backflow preventer
9 Pressure gauge connection; with a content of 1000 l and more a fixed installed pressure gauge is required.
10 Diaphragm pressure expansion tank (optional)
11 Thermostatic water mixer

Reading examples for the design of the storage tank size

for Hoval CombiVal CSR
Domestic hot water temperature 45 °C

1) **Comfort** design
Calculation with simultaneity factor according to **DIN 4708**

(1) Performance figure NL = 23
(2) Heating flow T = 60 °C
► **CombiVal CSR (500)**
(3) Heating flow T = 70 °C
► CombiVal CSR (400)
(4) Heating flow T = 80 °C
► CombiVal CSR (300)

2) **Standard** design
Calculation with simultaneity factor according to **Dresden Technical University**

(1) Performance figure NL = 23
(5) Heating flow T = 60 °C
► CombiVal CSR (400)
(6) Heating flow T = 70 °C
► CombiVal CSR (300)
(7) Heating flow T = 80 °C
► CombiVal CSR (300)

	Comfort 1)			Standard 2)		
T >	60 °C	70 °C	80 °C	60 °C	70 °C	80 °C
NL ˅	(2)	(3)	(4)	(5)	(6)	(7)
1						
2						
3						
4						
5						
6						
7						
8						
9						
10						
11						
12						
13	300					
14						
15				300		
16						
17						
18						
19						
20						
21	400	300				
22						
23 (1)						
24						
25						
26				400	300	
27						
28						
29			300			
30	500	400				
31						
32						
33						
34						
35						
36						
37						300
38				500	400	

Calculation of the continuous domestic hot water output for Hoval CombiVal CSR (500)

Reading example 2: domestic hot water output at 60 °C with flow temperature 70 °C

1. Assumption of the charging flow rate 2 m³/h
2. Intersection with curve $T_{heating\ flow}$ = 70 °C
3. ► Continuous output of approx. 1150 l/h
4. ► Heat output of approx. 66 kW without boiler supplement
5. Read the spread between flow and return, approx. 28 K, i.e. return flow is at approx. 42 °C)

Domestic hot water 60 °C

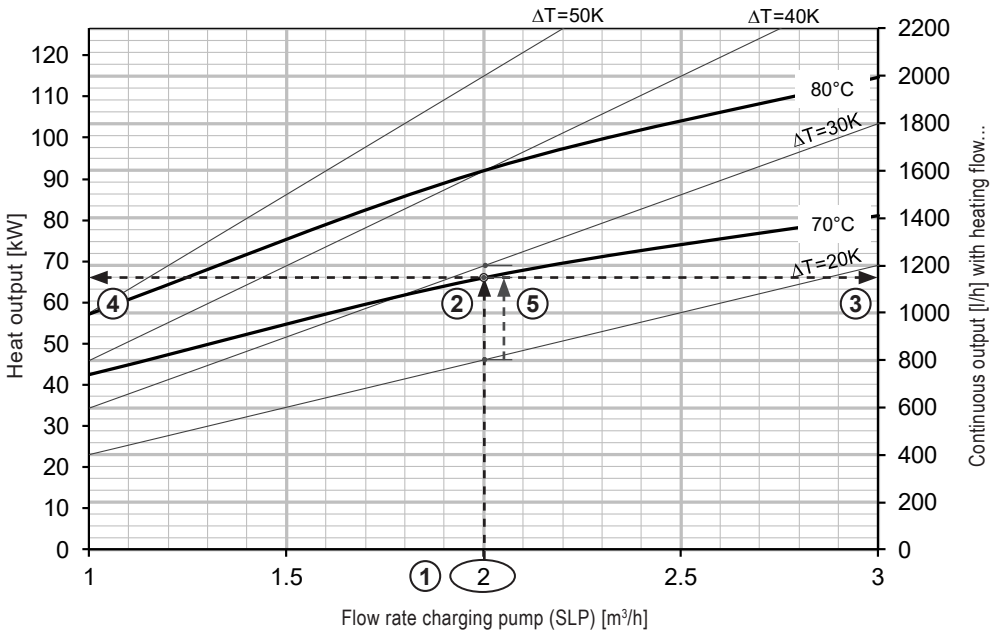

Reading example Comfort

for Hoval CombiVal CSR (400)
N number = 23 = 650 l/10 min 45 °C
Heating flow T = 70 °C
Cold water inlet 10 °C

10 min peak output/N number with domestic hot water 45 °C
according to DIN 4708 (Comfort) and Dresden Technical University (Standard)

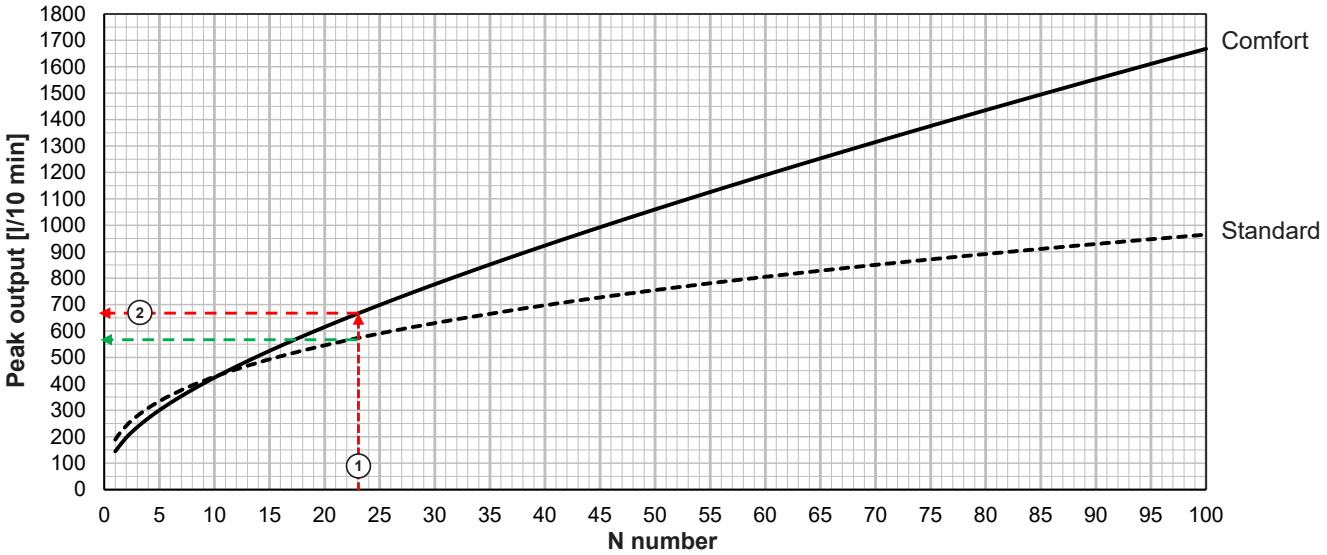

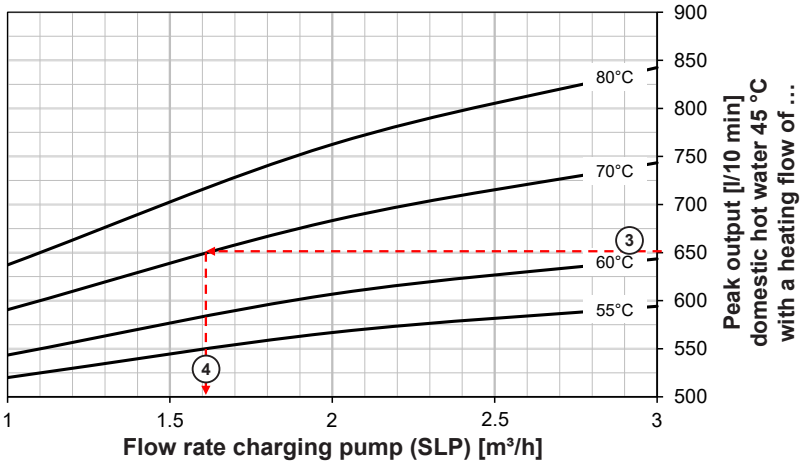

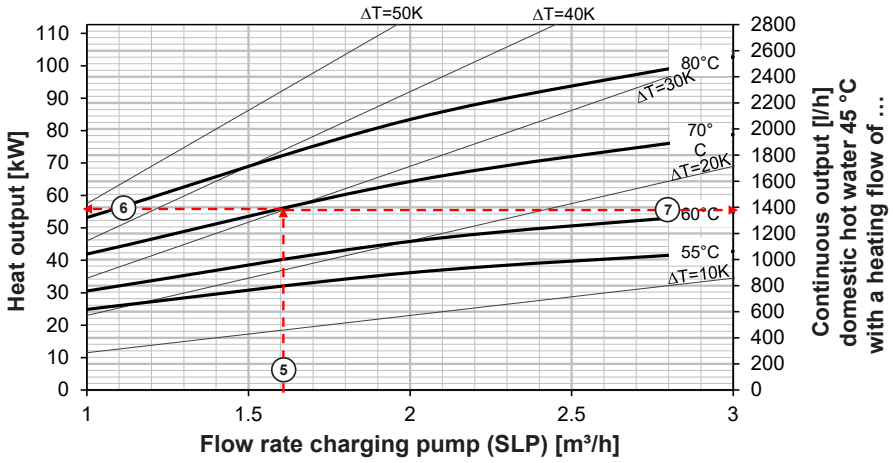

1. Transfer performance figure NL 23 to curve sheet
2. Read off peak output [l/10 min] from Comfort curve in the curve sheet
3. Transfer peak output [l/10 min] to the curve sheet up to intersection FL 70 °C
4. Read off flow rate charging pump (SLP) on curve sheet
5. Transfer flow rate charging pump to curve sheet intersection FL 70 °C
6. Read off heat output
7. Read off continuous output [l/h]

Reading example Standard

for Hoval CombiVal CSR (300)
N number = 23 = 555 l/10 min 45 °C
Heating flow T = 70 °C
Cold water inlet 10 °C

10 min peak output/N number with domestic hot water 45 °C
according to DIN 4708 (Comfort) and Dresden Technical University (Standard)

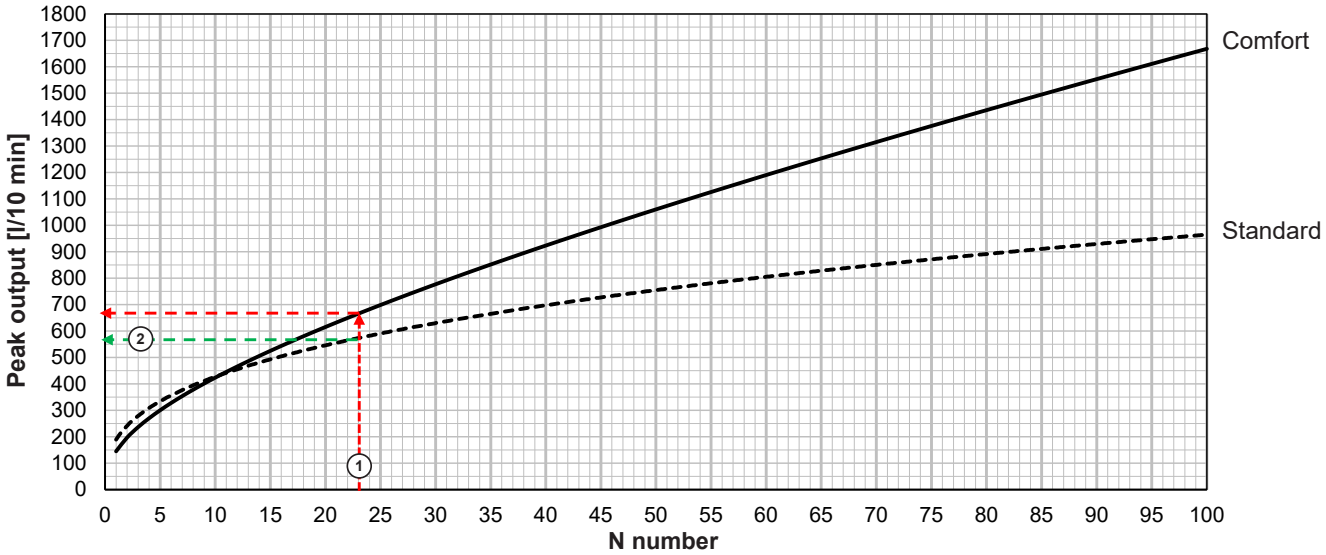

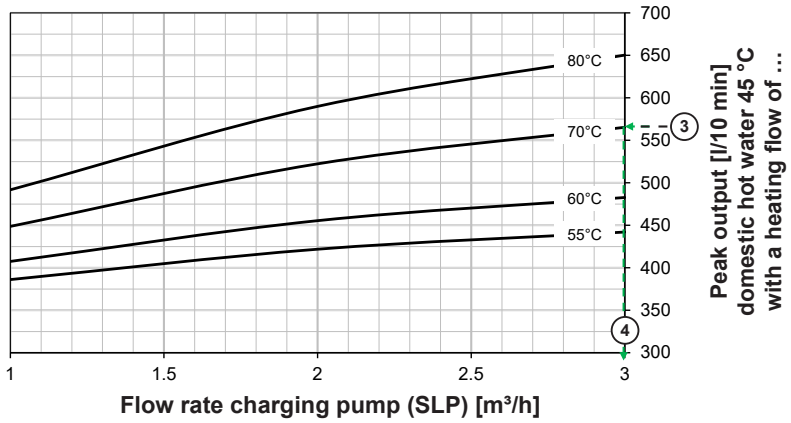

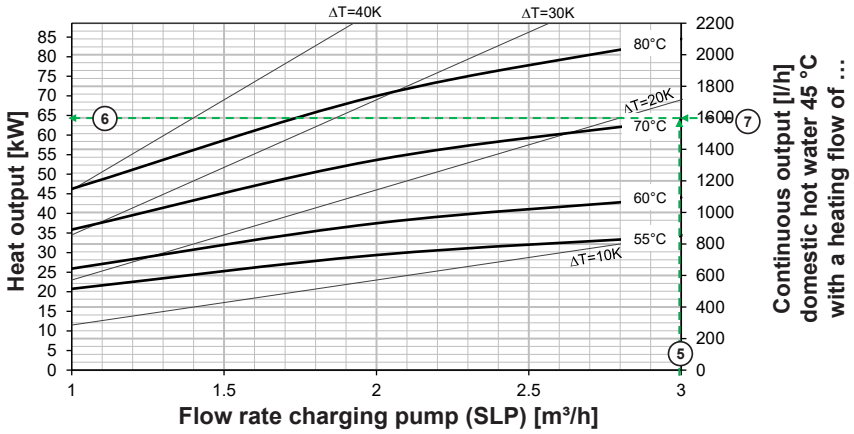

1. Transfer performance figure NL 23 to curve sheet
2. Read off peak output [l/10 min] from Comfort curve in the curve sheet
3. Transfer peak output [l/10 min] to the curve sheet up to intersection FL 70 °C
4. Read off flow rate charging pump (SLP) on curve sheet
5. Transfer flow rate charging pump to curve sheet intersection FL 70 °C
6. Read off heat output
7. Read off continuous output [l/h]

Fundamental selection criteria

Enamelled calorifiers must not be used where the water is completely softened.
If the pH value is below the balance pH value, the water is aggressive to metals. If the pH value is more than 0.3 below the balance pH value, an enamelled calorifier should not be used.
The water must comply with the limit values specified in the current drinking water ordinance.

Enamelled calorifiers

- If the **conductance** [1)] is < 200 µS/cm, enamelled calorifiers are no longer adequately protected by a magnesium anode. If the conductance is < 100 µS/cm, a Correx® impressed current anode also no longer offers adequate protection.
- If the **total hardness** [2)] is < 1 mmol/l, enamelled calorifiers are not adequately protected by a magnesium anode. If the total hardness is < 0.5 mmol/l, a Correx® impressed current anode also no longer offers adequate protection.
- Enamelled calorifiers must not be used where the water is completely softened. If the **residual hardness** [3)] is > 1 mmol/l or higher than 50 % of the total hardness of the crude water, a Correx® impressed current anode can help.
- If the **pH value** [4)] is more than 0.3 below the balance pH value, enamelled calorifiers should no longer be used. If the pH value is 0.1-0.3 below the balance pH value, a Correx® impressed current anode can help.
- Damage may result if the copper content is above 0.05 mg/l. The copper content must comply with the limit value specified in the current drinking water ordinance.

Limit values (in tabular form):

Type	Design	Corrosion protection	Conductance [1]	Total hardness [2]	Residual hardness [3] in proportion to total hardness of the tap water		pH value [4] below the balance pH value
			µS/cm	mmol/l	mmol/l	%	-
CombiVal ER (200-500)	S	1 Mg anode	> 200	> 1.0	> 1.0	> 50	< 0.3
	W	1 Correx® impressed current anode	> 100	> 0.5	> 1.0	> 50	0.1-0.3
CombiVal ER (800,1000)	S	2 Mg anodes	> 200	> 1.0	> 1.0	> 50	< 0.3
	W	1 Correx® impressed current anode	> 100	> 0.5	> 1.0	> 50	0.1-0.3
CombiVal ESR (200-400)	S	1 Mg anode	> 200	> 1.0	> 1.0	> 50	< 0.3
	W	1 Correx® impressed current anode	> 100	> 0.5	> 1.0	> 50	0.1-0.3
CombiVal ESSR (500)	S	1 Mg anode	> 200	> 1.0	> 1.0	> 50	< 0.3
	W	1 Correx® impressed current anode	> 100	> 0.5	> 1.0	> 50	0.1-0.3
CombiVal ESSR (800,1000)	S	2 Correx® impressed current anodes	> 100	> 0.5	> 1.0	> 50	0.1-0.3
MultiVal ERR (300-500)	S	1 Mg anode	> 200	> 1.0	> 1.0	> 50	< 0.3
	W	1 Correx® impressed current anode	> 100	> 0.5	> 1.0	> 50	0.1-0.3
MultiVal ESRR (500)	S	1 Mg anode	> 200	> 1.0	> 1.0	> 50	< 0.3
	W	1 Correx® impressed current anode	> 100	> 0.5	> 1.0	> 50	0.1-0.3
MultiVal ESRR (800,1000)	S	2 Correx® impressed current anodes	> 100	> 0.5	> 1.0	> 50	0.1-0.3
CombiVal E (300-1000)	S	1 Mg anode	> 200	> 1.0	> 1.0	> 50	< 0.3
	W	1 Correx® impressed current anode	> 100	> 0.5	> 1.0	> 50	0.1-0.3
CombiVal E (1500,2000)	S	2 Mg anodes	> 200	> 1.0	> 1.0	> 50	< 0.3
	W	1 Correx® impressed current anode	> 100	> 0.5	> 1.0	> 50	0.1-0.3
TopVal (130,160)	S	1 Mg anode	> 200	> 1.0	> 1.0	> 50	< 0.3

If the values are outside of the limit values, a stainless steel calorifier must be used.

W Customised design
S Standard design

In every case, either a Correx® impressed current anode or one/two magnesium anodes are allowed to be used.

Stainless steel calorifiers

- The storage tank must be properly earthed separately
- Equipotential bonding protection must be provided and must be functional.
- Possible functional separating gap (e.g. insulating screw)
- The chloride content of the cold water must be below 40 mg/l.
- No material that can release chlorides (e.g. seals) must be used.
- The pH value must not fall below 4.0.
- Ferritic deposits must not get onto or into the stainless component (CrNi).
- Water softeners > 20 fH0 are recommended, the hardness must not fall below 12 fH0.
- The storage tank must be maintained in line with the “water composition”, according to the rules of technology and the protective anodes used must be checked/replaced.
- Cleaning must be carried out with suitable tools. Do not use steel tools for stainless steel calorifiers.
- The flange screws must be tightened to the correct torque.

Limit values domestic water:

Type	Design	Corrosion protection	Max. chloride content mg/l
CombiVal CR (200-800)	S W	- 1 Correx® impressed current anode	< 40 < 200
CombiVal CR (1000)	S W	- 2 Correx® impressed current anodes	< 40 < 200
CombiVal CSR (300-800)	S W	- 1 Correx® impressed current anode	< 40 < 200
CombiVal CSR (1000-2000)	S W	- 2 Correx® impressed current anodes	< 40 < 200
MutliVal CRR (500-800)	S W	- 1 Correx® impressed current anode	< 40 < 200
MutliVal CRR (1000)	S W	- 2 Correx® impressed current anodes	< 40 < 200
MutliVal CSRR (500-800)	S W	- 1 Correx® impressed current anode	< 40 < 200
MutliVal CSRR (1000-2000)	S W	- 2 Correx® impressed current anodes	< 40 < 200
CombiVal C (200-2500)	S W	- 1 Correx® impressed current anode	< 40 < 200
Modul-plus F (21-52)	-	-	< 30
Modul-plus F (21-52) S	-	-	< 100
Modul-plus F (21-52) SM	-	Mg anodes	< 200
Modul-plus F (21-52) SX	-	Correx® impressed current anode(s)	< 300
Modul-plus FH (21-52) S	-	-	< 100
Modul-plus FH (21-52) SM	-	Mg anodes	< 200
Modul-plus FH (21-52) SX	-	Correx® impressed current anode(s)	< 300

W Customised design (on site)
S Standard design

In every case, either a Correx® impressed current anode or one/two magnesium anodes are allowed to be used.

Limit value filling and replacement water heating:

Modul-plus F (21-52),
Modul-plus F (21-52) S,
Modul-plus F (21-52) SM,
Modul-plus F (21-52) SX,
Modul-plus FH (21-52) S,
Modul-plus FH (21-52) SM,
Modul-plus FH (21-52) SX:
The chloride content of the filling and replacement water for the heating system must be < 50 mg/l. If this is not the case, the water must be demineralised.

Plate heat exchangers

Information about the quality of the plant water on the heating side and the tap water where plate heat exchangers are used.
Heat exchangers that do not contain non-ferrous metals should be used if corrosion problems affecting copper-soldered heat exchangers or copper pipes are known in the area of the drinking water supply where the plate heat exchangers will be used.

Heating water side:
The following applies:
- VDI 2035
- In addition, the EN 14868 standard must be applied, as well as the manufacturer-specific specifications

Domestic water side:
- All parts of the heat exchanger which come into contact with water are made of copper or stainless steel.
- To prevent deposits and abrasion, a filter < 100 µm must be installed upstream of the heat exchanger.
- The maximum temperature on the domestic water side is 60 °C, whereby the **total hardness** [3] of the water must not exceed 14 °dH (2.5 mmol/l). If, for hygiene reasons, hot water temperatures of over 60 °C are required, measures must be implemented to prevent the formation of deposits (calcification). However, a hot water temperature of 70 °C must never be exceeded.
- The **pH value** [2] of the domestic water must be between 7 and 9.
- Due to the risk of corrosion, the **sum of the chloride, nitrate and sulphate content** [1] of the domestic water must not exceed a total of 100/300 mg/l. The **maximum free chloride concentration** [4] is 0.5 mg/l.
- Due to the risk of deposits forming, the **mineral content** [5] of the tap water must not exceed 250 mg/l. The maximum **conductance** [6] is 500/1000 µS/cm.
- **Softened water** [7] must be blended with at least 50 % tap water to ensure that the ratio of [Ca^{2+} und Mg^{2+}] to [HCO_3^-] is over 0.5.
- If the sulphate [SO_4]$^{2-}$ content exceeds the carbonate [HCO_3^-] content, copper-soldered heat exchangers must not be used.

Limit values (in tabular form)		**Cu-soldered**		**Without non-ferrous metals**
		Plate heat exchanger heating water side	Plate heat exchanger domestic water side	Plate heat exchanger domestic water side
Conductance [6] of the tap water	µS/cm	-	< 500	< 1000
Residual hardness [7]	mmol/l	-	> 0.5	-
in relation to the total hardness of the tap water	%	-	> 50	-
pH value [2]	-	8.2 ... 10	7 ... 9	6 ... 10
Max. free chloride concentration [4]	mg/l	-	< 0.5	< 0.5
Chloride	mg/l	< 30	< 50	< 100
Nitrate	mg/l	< 50	< 100	< 300
Sulphate	mg/l	< 30	< 100	< 300
Sum of chloride, nitrate and sulphate content [1]	mg/l	< 50	< 100	< 300
Mineral content [5] of the tap water	mg/l	-	< 250	< 250
Total hardness [3]	°dH	-	< 14	< 15
	mmol/l	-	< 2.5	< 2.6

Electric heating elements

The electric heating elements are equipped with a temperature controller and a safety temperature limiter.

Safety temperature limiter
Switch-off temperature 98 °C - 6 K.
If the sanitary system cannot withstand these temperatures, a thermostatic water mixer must be built in.